U. S. DRAYER.

RAILWAY BRAKE APPARATUS.

APPLICATION FILED DEC. 4, 1911.

1,191,953.

Patented July 25, 1916.

4 SHEETS—SHEET 1.

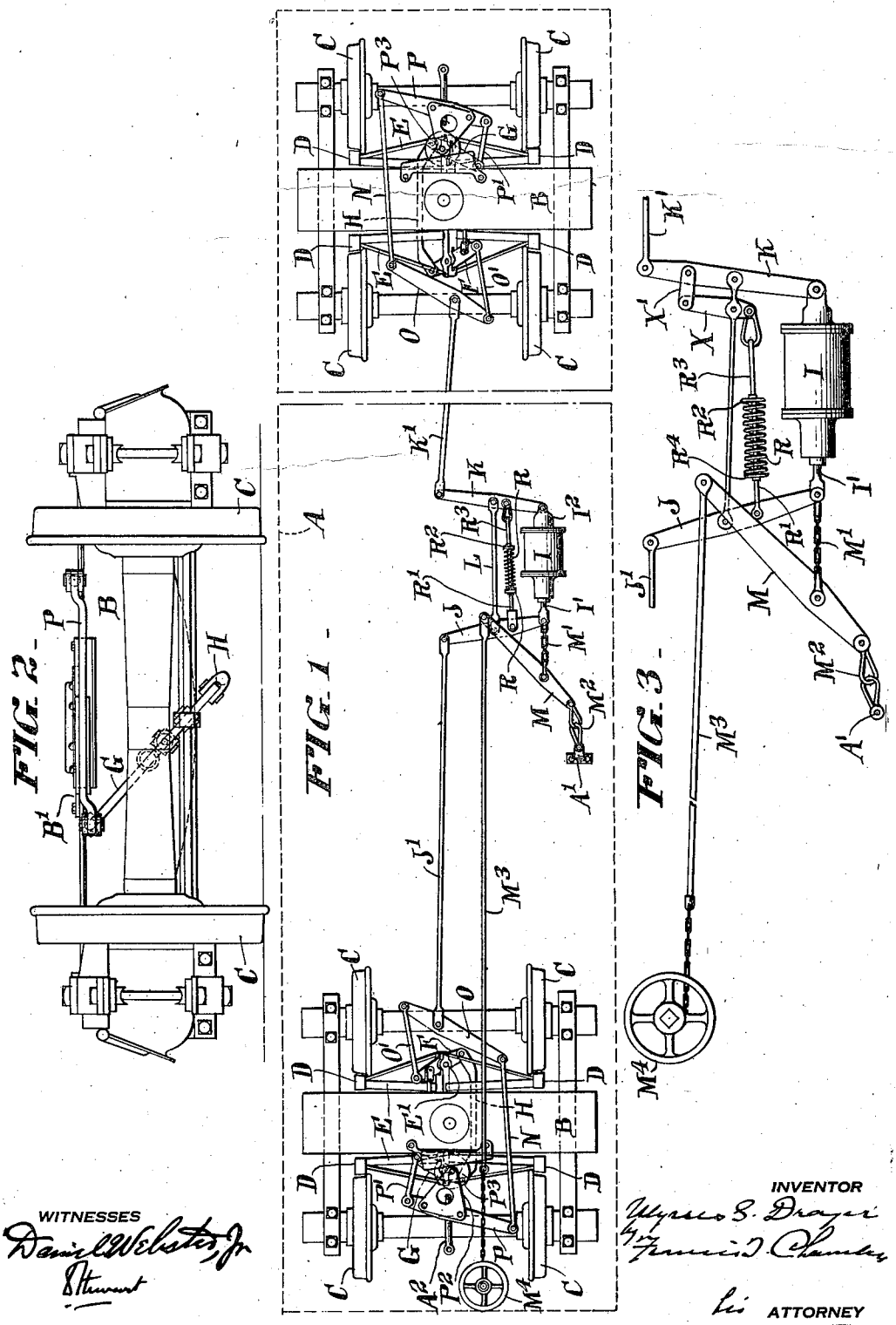

FIG. 2.

FIG. 1.

FIG. 3.

WITNESSES

Daniel Webster, Jr.

J. Thurmont

INVENTOR

Ulysses S. Drayer

by Francis J. Chandler

his ATTORNEY

U. S. DRAYER.

RAILWAY BRAKE APPARATUS.

APPLICATION FILED DEC. 4, 1911.

1,191,953.

Patented July 25, 1916.

4 SHEETS—SHEET 2.

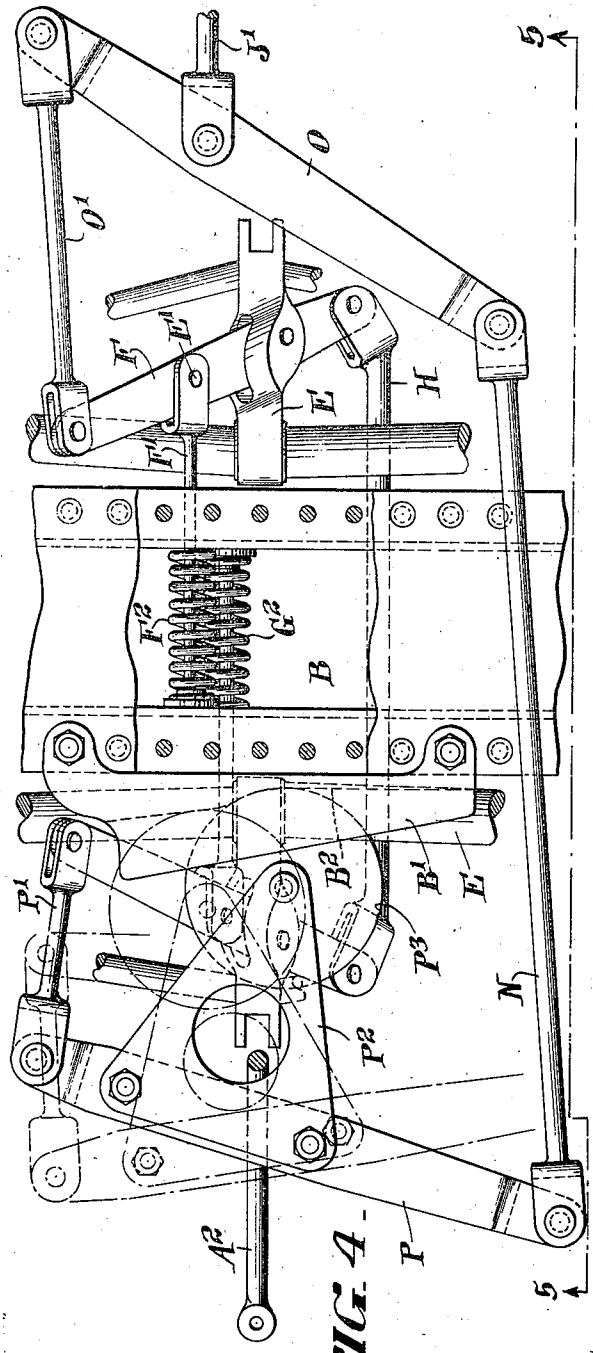

FIG. 4.

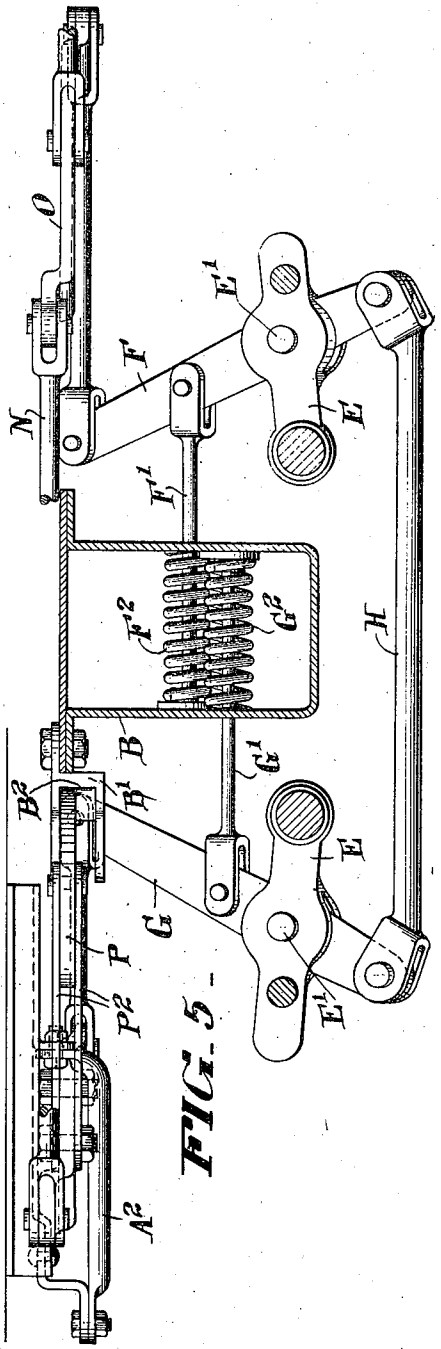

FIG. 5.

WITNESSES

Daniel Webster Jr

D. Stewart

INVENTOR

Ulysses S. Drayer

BY Francis J. Stevens

his ATTORNEY

U. S. DRAYER.

RAILWAY BRAKE APPARATUS.

APPLICATION FILED DEC. 4, 1911.

1,191,953.

Patented July 25, 1916.

4 SHEETS—SHEET 3.

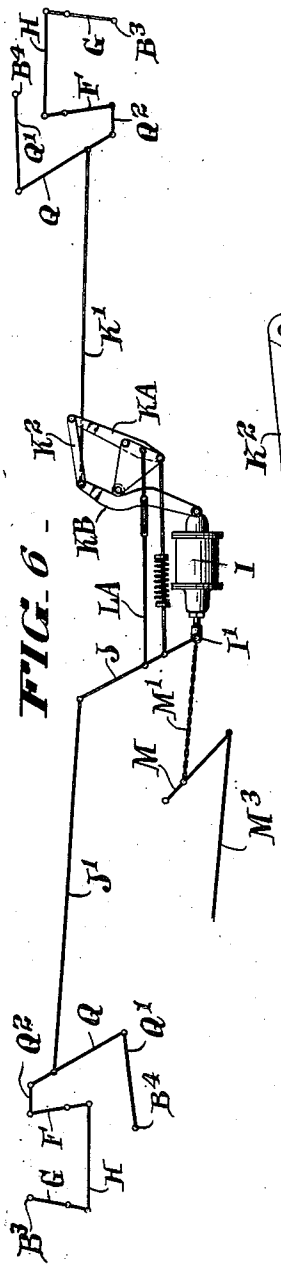

FIG. 6.

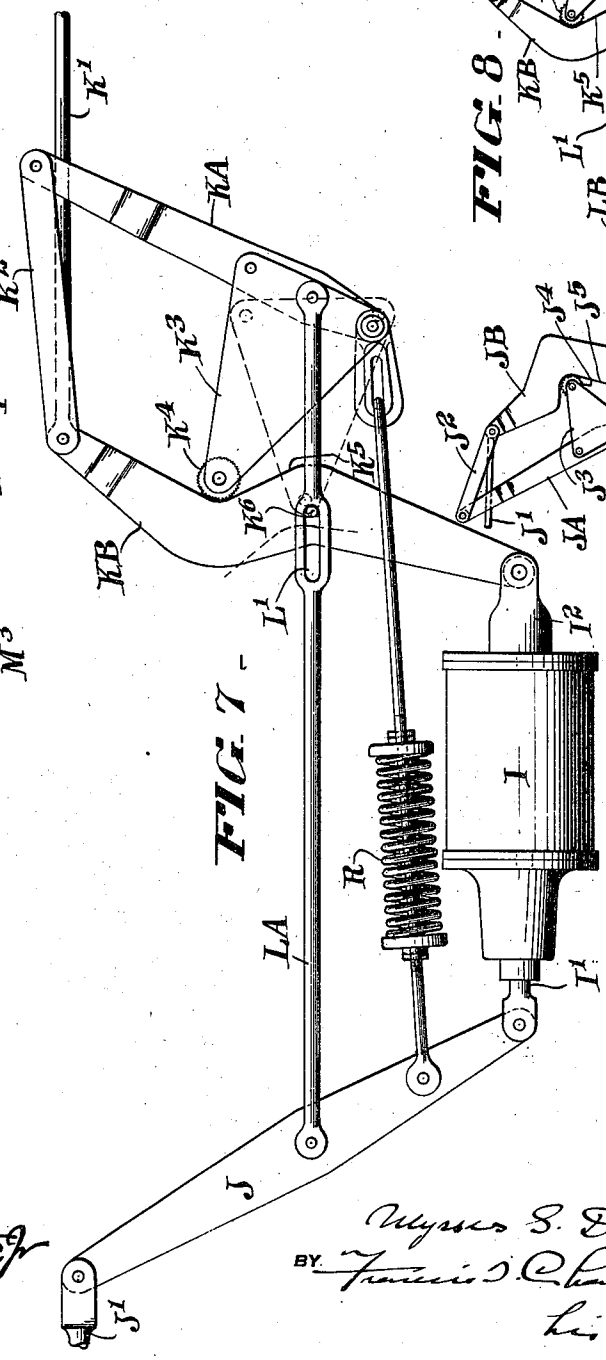

FIG. 7.

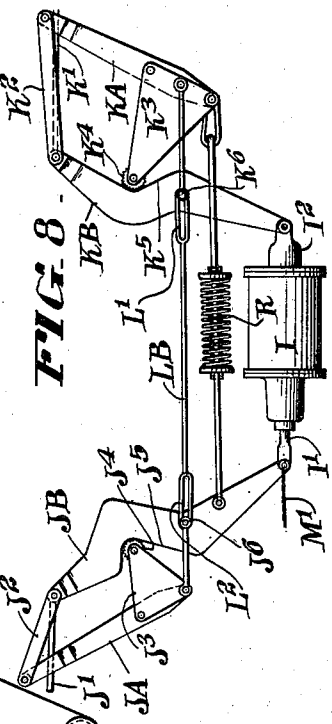

FIG. 8.

WITNESSES

Daniel Webster, Jr.

S. Stewart

INVENTOR

Ulysses S. Drayer

BY Francis J. Chamberlain

his ATTORNEY

U. S. DRAYER.

RAILWAY BRAKE APPARATUS.

APPLICATION FILED DEC. 4, 1911.

1,191,953. Patented July 25, 1916.

4 SHEETS—SHEET 4.

FIG. 9.

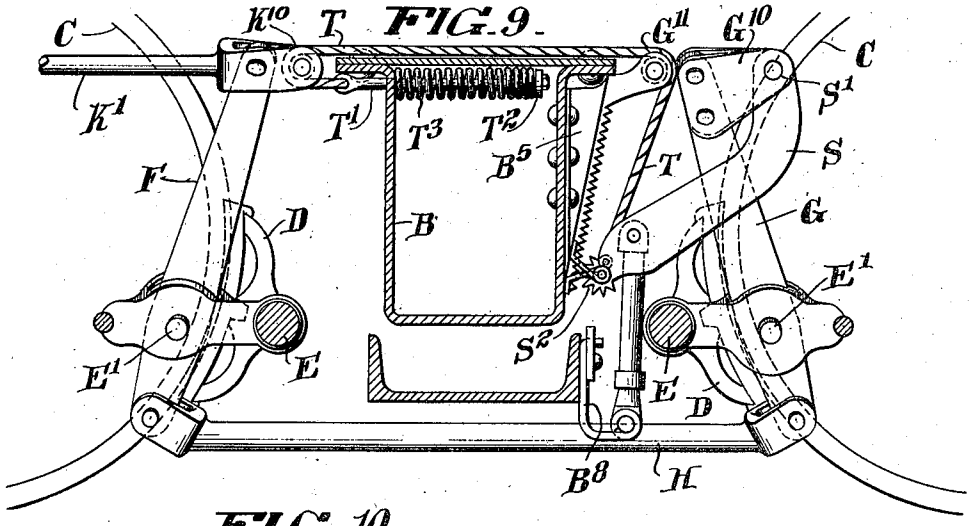

FIG. 10.

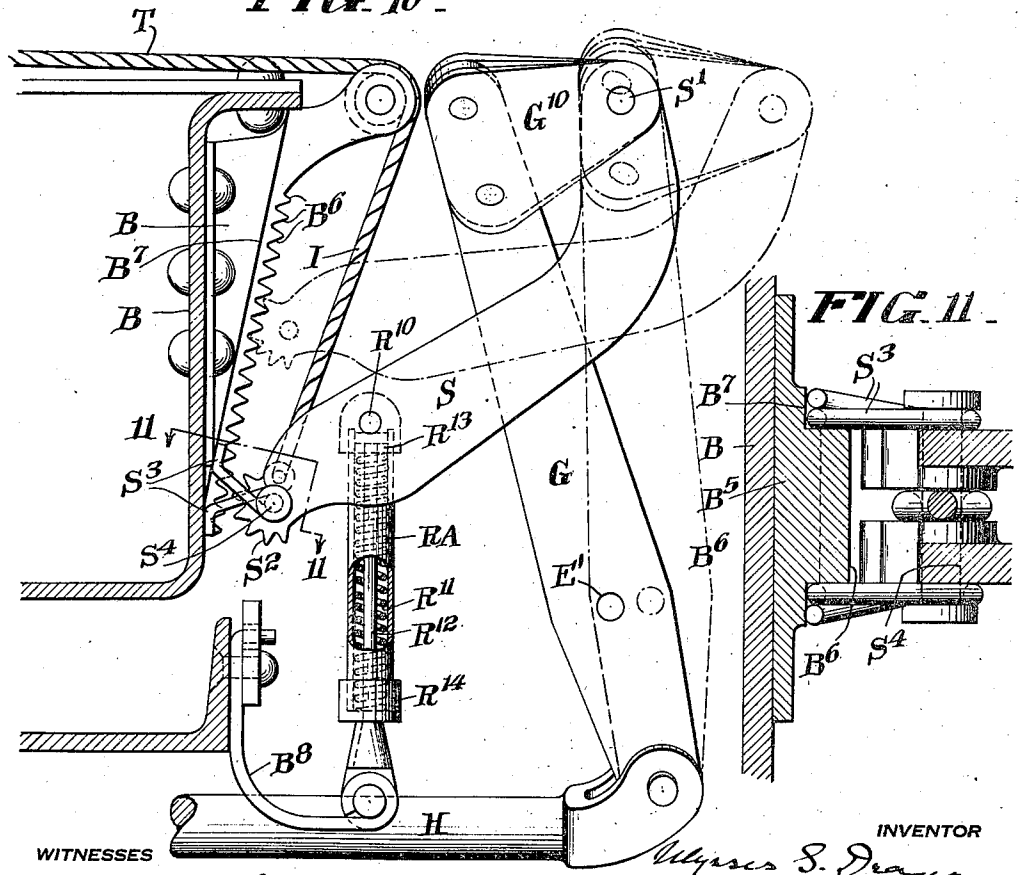

FIG. 11.

WITNESSES

Daniel Webster Jr

J. Thurst

INVENTOR

Ulysses S. Drayer

BY Francis J. Chandler

his ATTORNEY

UNITED STATES PATENT OFFICE.

ULYSSES S. DRAYER, OF ALTOONA, PENNSYLVANIA.

RAILWAY-BRAKE APPARATUS.

1,191,953. Specification of Letters Patent. Patented July 25, 1916.

Application filed December 4, 1911. Serial No. 663,881.

To all whom it may concern:

Be it known that I, ULYSSES S. DRAYER, a citizen of the United States of America, residing in Altoona, county of Blair, and State of Pennsylvania, have invented a certain new and useful Improvement in Railway-Brake Apparatus, of which the following is a true and exact description, reference being had to the accompanying drawings, which form a part thereof.

My present invention relates to the wheel braking apparatus employed on railway cars. The primary purpose of the invention is the production of a car brake rigging having durable, effective and comparatively simple provisions for automatically taking up slack in the brake rigging during the initial stages of each brake application, and for paying out slack during the final stages of each brake release operation. By doing this I obtain ample slack in the rigging when the brakes are fully released, and at the same time minimize the travel of the brake piston at each brake application, and reduce the amount of air required for each brake application.

While the brake beam suspensions commonly employed are designed to hold the brakes away from the wheels when the brakes are released, it is found necessary in practical operation to provide the brake rigging with considerable slack in order to avoid an undue brake resistance and brake shoe wear, particularly when the cars are being started and are running around curves, and it is now standard practice in this country to arrange the brake rigging of a freight car for initial slack, such that six inches travel of the brake cylinder piston is required to take it up in each brake application. The slack in the brake rigging initially provided increases as the rigging loosens up with wear, and in particular as the brake shoes wear away. An unnecessarily large amount of slack in the rigging is objectionable because the increased travel of the air brake piston required to set the brakes results in an increased consumption of air. Moreover, it may and frequently does result in movements of the levers through which the braking forces are transmitted into positions detrimental to the equal and proper distribution of the braking forces. Substantial variations in the travel of the air brake piston in itself interferes with the desired uniformity in the force with which the brakes are applied since in the air brake cylinder the air is used expansively and the final pressure when the brakes are fully applied is a function of the piston travel.

Railway brake riggings are commonly installed with pin and hole, or other provisions whereby the rigging may be manually adjusted from time to time to compensate for variations in slack consequent upon wear, and various automatic provisions for accomplishing these adjustments have been proposed. In the prior arrangements commonly used the slack, when taken up, is taken up permanently, so to speak, whereas with my improved apparatus, the slack taken up on each brake application is paid out in the following brake release application. The two adjustments are thus different in character, and the means for producing them may be used in conjunction, though with my invention the ordinary variations in slack occurring with wear may be taken care of in many cases without further permanent adjustment of the rigging after the initial adjustment of the apparatus given it at the time of installation.

In carrying out my invention I prefer to employ provisions automatically actuated by the changes in position on each brake application and release of a power transmitting lever element of the rigging for camming or wedging said lever element toward or away from a part to which it is operatively connected, as by a link connection or by being fulcrumed thereon.

The various features of novelty which characterize my invention are pointed out with particularity in the claims annexed to and forming a part of this specification. For a better understanding of the invention, however, and the advantages possessed by it reference should be had to the accompanying drawings and descriptive matter in which I have illustrated and described various forms in which my invention may be embodied.

Of the drawings, Figure 1 is a somewhat diagrammatic view illustrating a railway car brake rigging embodying one form of my invention. Fig. 2 is an end elevation of a truck equipped with a brake rigging of the kind shown in Fig. 1. Fig. 3 is a diagrammatic plan view of a portion of the

apparatus shown in Fig. 1. Fig. 4 is a plan view on a larger scale, of a portion of the apparatus shown in Fig. 1. Fig. 5 is a partial sectional elevation taken on the line 5—5 of Fig. 4. Fig. 6 is a diagrammatic representation of a brake rigging embodying a second form of my invention. Fig. 7 is a plan view of a portion of the brake rigging illustrated diagrammatically in Fig. 6. Fig. 8 is a view taken similarly to Fig. 7 showing a further modification. Fig. 9 is a sectional elevation of a truck equipped with still another form of brake rigging embodying my invention. Fig. 10 is a view taken similarly to Fig. 9 showing on a larger scale a portion only of the apparatus shown in Fig. 9. Fig. 11 is a section taken on the line 11—11 of Fig. 10.

In the drawings and referring first to the construction shown in Figs. 1, 2, 4 and 5, A represents the body of the car. Located, one under each end of the car are trucks, B representing the truck bolster, C the car wheels, D the brake heads and E the brake beams. To one of the brake beams of each truck a truck brake lever F is pivotally connected at E′ in the usual manner, and a similar truck lever G is similarly connected to the other brake beam. These levers, which may be, and usually are shown as being inclined to the horizontal are connected at their lower ends by the floating link or spreader rod H. On the car, and in the type of car shown in Fig. 1, on the underside of the car body and substantially midway between the trucks is secured the usual air brake cylinder I. The movable push rod I′ of the brake cylinder is pivotally connected to one end of a floating lever J. At the opposite end of the brake cylinder is located a lever K which is fulcrumed at one end to the car body, or rather more usually as shown, in the yoke I^2 secured to the end of the brake cylinder. The levers J and K are connected between their ends by a link L. From the ends of the levers J and K, remote from the brake cylinder brake rods J′ and K′, run to the trucks at the opposite end of the car to actuate the brake mechanism there. M, represents a lever connected between its ends by a chain connection M′ to the piston rod I′ of the brake cylinder. The lever M is connected at one end to the body of the car at A′ by the jointed connection M^2. The other end of the lever M is connected by the chain and rod connection M^3 to the shaft of the hand brake wheel M^4.

In so far as above described the brake rigging shown in Figs. 1, 2, 4 and 5 does not differ from that heretofore known in the manner in which the pull of the brake rods J′ and K′ is transmitted to the brakes at each brake application, whether brought about by the admission of air to the brake cylinder or by the manipulation of the brake wheel M^4. In the usual brake rigging heretofore employed the brake rod J′ or K′ has been connected to one of the corresponding brake truck levers, either directly as shown in Fig. 9, or indirectly through a multiplying lever or levers as shown in Fig. 6, and the other brake truck lever has its end, remote from that to which the link H is connected, fulcrumed on the car body or more usually on the truck bolster.

With the construction shown in Figs. 1, 2, 4 and 5, however, each of the brake rods J′ and K′ is connected to a corresponding floating lever O between the ends of the latter. Each lever O is connected at one end by a link O′ to the corresponding brake lever F and is connected at its other end by a link N to one end of a lever P. Each lever P is located at the opposite side of the truck from the corresponding lever O and is connected at its other end by a link or spreader rod P′ to the corresponding end of the truck lever G. Each lever P is held against undue displacement, while being permitted substantial freedom to adjust itself to the stresses imparted to it by means of a guide A^2 secured to the body of the car and passing loosely through an aperture in the arm P^2 of the lever P. This aperture is large enough to permit the lever to move bodly toward and away from the corresponding truck bolster. The arm P^2 coöperates with a cam block B′ connected to the corresponding truck bolster B. As shown, each arm P^2 is provided at its free end with a roll P^3 and each cam block B′ is in the form of a casting or forging secured to the side of the bolster and formed with a grooved runway receiving the corresponding roll P^3. The bottom B^2 of this runway forms a cam surface against which the corresponding arm P^2 or rather the roll P^3 bears for the purpose hereinafter described.

The brake rigging as shown in full lines in Figs. 1, 2, 4 and 5 is in the normal position in which the brakes are released. On each brake application, whether brought about by the manipulation of the hand wheel M^4 or by the admission of air to the brake cylinder I, the end of the floating lever J adjacent the brake cylinder is moved to the left, as the apparatus is shown in Fig. 1, with the result, as will be apparent without explanation, of moving the two brake rods J′ and K′ each toward the other and away from the truck to which it extends.

The pull exerted on each floating lever O by the brake rod connected to it will be transmitted to and distributed between the brake shoes through the truck brake levers, floating levers P and the various connected links. As the parts move to bring the brake shoe up against the brake wheels, the lever P turns from the full line position shown

in Fig. 4 in the direction to bring it into the dotted line position of that figure. As this turning movement proceeds the wheel P^3 travels along the cam surface B^2 with the result that the lever P is cammed bodily, so to speak, away from the truck bolster with the result of taking up slack, and, in effect, shortening the operative connections from the brake shoes to the primary power applying member of the rigging, which may be regarded as the brake cylinder push rod I′ or connection M′ accordingly as the brakes are applied by the brake cylinder or by hand.

As the roll P^3 moves along the surface B^2, thus in effect shifting the fulcrum of the lever P, the ratio between the forces transmitted by the rods N and P′ varies. The parts should be so proportioned however that when the normal amount of slack is taken up the position of the roll P^3 should be such that the ratio above referred to will be that required to properly distribute the braking force between the different brake shoes of the corresponding truck. Preferably the parts are so arranged that when the lever P has moved into the position in which the normal amount of slack has been taken up, further turning movement of the lever P, due, for instance, to the excess of slack consequent upon the wearing away of the brake shoes, will produce only a slight change in the position of the fulcrum of the lever P and consequently only a slight change in the ratio between the forces transmitted by the links N and P′.

When the brakes are released the spring connections F′ and F^2 and G′ and G^2 between the brake levers F and G and the truck bolster restore the levers F and G to their normal position. These spring connections to the levers F and G may be advantageously so proportioned or disposed that in the initial stages of the brake application the upper end of the lever G, as viewed in Fig. 4, will move to the left before or faster than the upper end of the lever F moves to the right, the upper end of the lever G similarly returning to its normal position ahead of the corresponding return of the lever F. When the springs F^2 and G^2 are of equal strength this result may be accomplished by connecting them to the levers F and G, as shown in Fig. 4, with the distance between the spring connection to the lever and the upper end of the lever less in the case of lever F than in the case of lever G. The horizontal spring connection rods F′ and G′ which pass slidingly through the walls of the hollow bolster B, exert a sufficient supporting effect on the brake beams through the truck levers F and G to make it unnecessary to provide a so called "third suspension" for the beams in cases where such suspensions would otherwise be necessary. While the springs F^2 and G^2 thus tend to return the brake levers to their normal position I find it advantageous to supplement their action by other provisions for causing slack to be paid out when the brakes are released. This I accomplish in Fig. 1 by providing a spring connection between the main levers J and K. This spring connection comprises in addition to the spring R proper, a link R′ pivoted at one end to the lever J and connected at its opposite end to a follower R^2 engaging the end of the spring remote from the lever J and a link R^3 pivoted at one end to the lever K and connected at its opposite end to the follower R^4 engaging the end of the spring R remote from the lever K.

In the preferred form of spring arrangement shown in Fig. 3, the spring connection R is connected at one end to the lever J and at the other end to the short end of a lever X pivoted between its ends to the link L and connected at its other end by a link X′ to the lever K. With this arrangement the action of the spring connection is to throw the lever K and the brake rod K′ to the right on the release of the brakes thus paying out slack to the brake rigging at the right hand truck. At the same time the spring connection is effective to retract the brake cylinder end of the lever J and by turning the lever J about the axis of its pivotal connection to the link L, the brake rod J′ is moved to the left thus giving slack to the portion of the brake rigging pertaining to the left hand truck.

It will be understood that the movement of the brake rods J′ and K′ in the directions to pay out slack is opposed by the frictional resistance to such movements and that in consequence slack is properly paid out to the rigging of both trucks with the arrangement shown in Fig. 3, although if there were no frictional opposition to the movements of the parts, the spring connection might have a slight tendency to ultimately move rod J′ as well as rod K′ to the left.

The form of apparatus shown in Figs. 6 and 7 differs from that shown in Figs. 1–5 in the form and to some extent in the mode of operation of the slack take up provisions, and also in the fact that these slack take up provisions are not located at the trucks proper but are located in the connections between the brake rods J′ and K′ and the primary actuating devices, *i. e.* brake cylinder and hand wheel, for applying the brakes. As shown in Figs. 6 and 7, the floating lever J is connected at one end to the brake rod J′ and at the other end to the brake cylinder push rod I′ and the hand wheel actuated lever M, just as in the construction first described. Between the ends of the lever J there is connected to the latter a link LA. The opposite end of the link LA is pivotally

connected to a floating lever KA connected at one end by a link K^2 to the free end of a lever KB anchored to the end of the brake cylinder I as is the lever K in the construction first described. The brake rod K′ is connected to the free end of the lever KB and the latter is formed at one edge with a cam contour K^5 against which bears the roll K^4 of an arm K^3 secured to the lever KA. The link LA is formed with a slot L′ receiving a pin K^6 carried by the lever KB and in consequence of this pin and slot connection between the link LA and the lever KB and the pivotal connection between the ends of the link LA and the levers J and KA, it will be readily apparent that, as the lever KB is swung in the counter-clockwise direction about its fixed fulcrum, as it is in the brake application, the arm K^3 will travel up the hump in the cam contour K^5. The movement of the brake rod K′ on a given movement of the link KA will thus exceed that which would be given to the brake rod if the link LA were directly pivoted to the lever KB. It will be understood, without explanation, that the slack take up effect of the movement of the cam roll K^4 along the cam edge of the lever KB is distributed equally between the portions of the brake rigging at the opposite end of the car. The contour of the cam edge K^5 is so designed that when the usual amount of slack is taken up the roll K^4 will have about reached the apex of the hump K^5 so that a further turning movement of the lever KB, if necessary, will not appreciably affect the distance between the pin K^6 and the pivotal connection between the link LA and the lever J. In consequence, after the slack is taken up the apparatus operates substantially as it would if the link LA were directly pivoted to the lever KB. To effectually release the brakes and return the parts to the proper released position on a brake release I prefer to place a spring connection R between the lever J and the lever KA. In Fig. 6 the brake rods J′ and K′ are connected to corresponding levers Q, each connected at one end by a link Q′ to the corresponding bolster at B^4, and connected at the other end by a link Q^2 to the free end of the corresponding truck lever F. In this arrangement each truck lever G is a dead lever, being pivotally connected at B^3 to the bolster as is usual in brake riggings now in common use.

In the construction shown in Fig. 8, the slack take up provisions of Figs. 6 and 7 are duplicated in substance at each end of the brake cylinder. The lever J of Figs. 6 and 7 is replaced in Fig. 8 by a lever JB and parts JA, J^2, J^3, J^4, J^5 and J^6, corresponding to the parts KB, K^2, K^3, K^4, K^5 and K^6 of Figs. 6 and 7. In Fig. 8 the link LB, replacing the link LA of Figs. 6 and 7, differs from the latter in being pivoted at its left hand end to the lever JA, and in being provided with a slot L^2 at its left hand end receiving the pin J^6 of the lever JB. In this construction the spring connection R is placed between the lever members JB and KA. It will be apparent without further explanation, that the spring connections of which the spring R forms a part, employed in Figs. 6, 7 and 8, correspond in character to the spring connection of Fig. 3 rather than to the spring connection of Fig. 1, and perform the double function of tending to move the brake rod K′ to the right and of returning the brake cylinder end of the floating lever actuated by the push rod I′ to its normal position on each brake release.

In the construction shown in Figs. 9, 10 and 11 the slack take up provisions are directly applied to the truck levers and the latter need not differ from the truck levers of the brake rigging heretofore in common use, except in that the lever G instead of being a dead lever pivoted to a fixed fulcrum (B^3 in Fig. 6) is provided in the construction of Figs. 9, 10 and 11 with a shiftable fulcrum and during the slack take up operation is not a dead lever, but a live or floating lever. The adjustable fulcrum for the lever G shown in Figs. 9, 10 and 11 comprises an arm S pivoted at S′ to the truck lever G, or rather as shown, to a casting G^{10} secured to the end of the latter. The movement of the lever S along the cam member B^5, and the consequent camming away from the bolster of the fulcrum end of the lever G, is brought about in the form shown by means of a flexible member T. The member T has one end secured to a pin S^4 carried by the arm S at its free end. The opposite end of the member T is connected to a rod T′ which extends into the bolster and carries at its inner end a follower T^2 which bears against a helical spring T^3 extending between it and the adjacent side of the bolster. The flexible member T passes around a pulley K^{10} carried by the brake rod K′. The lever S is formed at its end remote from the lever G into a gear segment, the teeth S^2 of which are adapted to mesh with rack teeth B^6 formed on the cam member B^5. Normally these teeth are held out of engagement by means of springs S^3 mounted on the ends of the pin S^4 and bearing against guide ways B^7 at the opposite sides of the teeth B^6. A spring connection is provided to return the lever S to the position shown in full lines in Figs. 9, 10 and 11, when the brakes are released. This spring connection comprises a tubular casing RA pivotally connected to the lever S at its upper end by the pin R^{10}, a spring R^{11} within the casing, a rod R^{12} extending into the casing at the lower end of the latter and provided at its upper end with a head or follower R^{13} bearing against the

upper end of the spring R^{11}. The lower end of the spring R^{11} bears against a cap R^{14} forming the bottom of the casing. At its lower end the member R^{12} is pivotally connected to a spring arm B^8 secured to a portion of the truck.

In operation, when the application of the braking force causes the brake rod K' to begin to move away from the truck bolster, a corresponding but multiplied movement of the free end of the lever S along the cam block B^5 is brought about. It should be explained that the spring T^3 is substantially stronger than the spring R^{11} and hence the initial compression of the spring T^3 is small. The movement of the free end of the lever S cams the connected end of the lever G away from the bolster. This movement continues until the slack has been largely taken up and the force opposing further movement of the lever G from the bolster is sufficient to compress the springs S^3 and force the teeth S^2 into mesh with the teeth B^6. When this occurs the arm S forms in effect a stationary fulcrum for the connected end of the lever G, and in the following stages of the brake application the brake rod rigging shown in Figs. 9, 10 and 11 operates like the ordinary form of brake rigging in which the lever G is permanently fulcrumed to the bolster. It will be understood that after the teeth S^2 and B^6 mesh, the spring T^3 yields to permit further necessary movement of the member T. When the brakes are thereafter released and the tension of the spring T^3 decreases, the spring R^{11} and the springs S^3 act to throw the teeth S^2 and teeth B^6 out of mesh and to return the arm S to the normal brake released position.

With all the forms of the invention disclosed it will be apparent that the slack adjusting means comprises provisions automatically actuated by changes in the position of a lever forming a part of the brake rigging for in effect shortening the operative connection between the primary power applying member of the brake rigging proper, (connection M' or push rod I') and the brake shoes during the initial stages of each brake application and for increasing the length of these connections and thereby increasing the slack in the rigging on each brake release.

While in accordance with the provisions of the statutes I have illustrated and described the best forms of my invention now known to me, it will be apparent to those skilled in the art that changes may be made in the form of the apparatus disclosed without departing from the spirit of my invention, and that under some conditions certain features of my invention may be used with advantage without a corresponding use of other features.

Having now described my invention what I claim as new and desire to secure by Letters Patent is:

1. In a railway brake rigging, the combination with a primary power applying member and the brake shoes, of power transmitting connections between said member and shoes including a part having a bearing surface, a lever rocking on said surface and having a contact portion through which it engages said surface, moving along the latter as the parts change position in the brake application and release operation and two pivotal connections to said lever at spaced apart points, the line connecting which lies at one side of the axis on which said lever rocks.

2. In a railway brake rigging, the combination with a primary power applying member and the brake shoes, of power transmitting connections between said member and shoes including a part having a bearing surface, a lever rocking on said surface and having a contact portion through which it engages said surface, moving along the latter as the parts change position in the brake application and release operation and two pivotal connections to said lever at spaced apart points, the line connecting which lies at one side of the axis on which said lever rocks, said surface being inclined to said line so that said lever is bodily cammed away from said part during one stage of the movement of said contact portion along said surface.

3. In a railway brake rigging the combination of a brake lever, a second lever, a link connection between one end of said second lever and said brake lever, a power transmitting link connection to the opposite end of said second lever and a stationary cam member against which said second lever fulcrums and adapted as said lever turns on the brake application to cam the lever bodily away from said member.

4. In a railway brake rigging the combination of a brake lever, a second lever, a link connection between one end of said second lever and said brake lever, a power transmitting link connection to the opposite end of said second lever, a stationary cam member against which said second lever fulcrums and adapted as said lever turns on the brake application to cam the lever bodily away from said member and a yielding connection tending to hold said levers in their brake released positions.

5. In a railway brake rigging the combination with the truck brake levers F and G, of a spreader link connecting one end of each lever with one end of the other, a lever P, a link P' connecting one end of the lever P to the free end of the lever G, a lever O, a link O' connecting one end of lever O to

the free end of the lever F, a spreader link connecting the ends of the levers O and P remote from the connections to the levers F and G, a power transmitting connection J′ to the lever O between the ends of the latter, said lever P having a lateral projection, and a truck carried part B having a surface on which said lateral projection fulcrums, said lever and surface of the member B being so inclined to each other that the lever P is cammed away from said part B on the change in position of said lever P occurring when a pull is exerted on the member J′.

6. In a railway brake rigging the combination with the truck brake levers F and G of a spreader link connecting one end of each lever with one end of the other, a lever P, a link P′ connecting one end of the lever P to the free end of the lever G, a lever O, a link O′ connecting one end of lever O to the free end of the lever F, a spreader link connecting the ends of the levers O and P remote from the connections to the levers F and G, a power transmitting connection J′ to the lever O between the ends of the latter, said lever P having a lateral projection, a truck carried part B having a surface on which said lateral projection fulcrums, said lever and surface of the member B being so inclined to each other that the lever P is cammed away from said part B on the change in position of said lever P occurring when a pull is exerted on the member J′ and resilient means tending to hold said levers F and G in their brake released positions.

7. In combination with a railway truck, a brake mechanism mounted thereon comprising the usual brake beams and shoes, floating truck levers each connected to a corresponding brake beam and spring connections between each truck lever and the truck each tending to hold the corresponding brake shoes out of contact with the truck wheels and to support the corresponding brake beam.

8. In combination with a railway truck having a hollow bolster, a brake mechanism mounted on the truck and comprising the usual brake beams and shoes, floating truck levers each connected to a corresponding brake beam, and spring connections between each truck lever and the truck, each comprising a spring located within the hollow bolster, and a horizontal spring rod engaging said spring and passing slidingly out through the wall of the bolster and pivotally connected to the corresponding truck lever and through the latter, tending to hold the brake shoes out of contact with the wheels and to support the corresponding brake beam.

ULYSSES S. DRAYER.

Witnesses:
D. STEWART,
J. R. BOUCOT.