Sept. 8, 1942. H. P. CLAUSEN 2,294,963

VARIABLE SPEED PLAYBACK FOR SOUND MACHINES

Filed Dec. 21, 1940 2 Sheets-Sheet 1

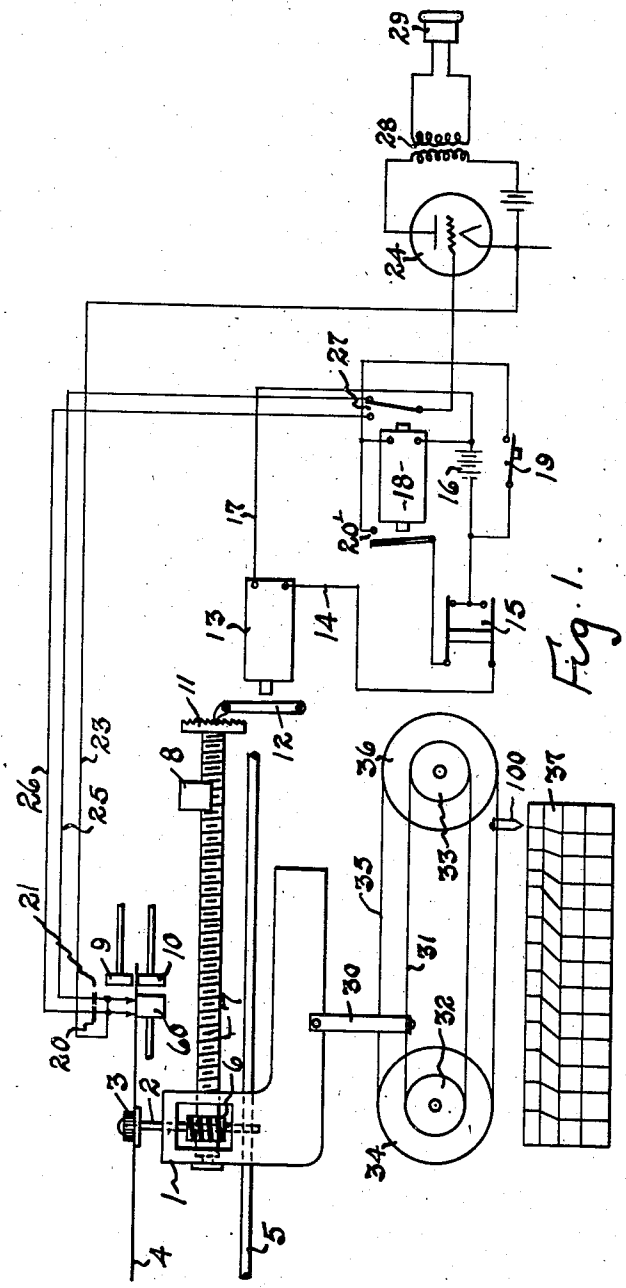

Fig. 1.

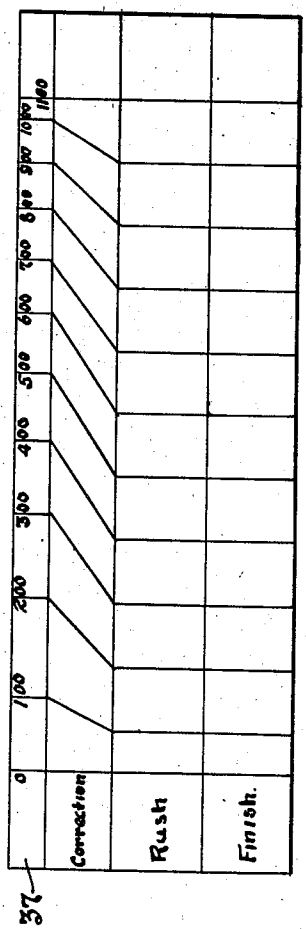

Fig. 2.

INVENTOR.
Henry P. Clausen

BY

Darby & Darby
Atts.

Sept. 8, 1942. H. P. CLAUSEN 2,294,963

VARIABLE SPEED PLAYBACK FOR SOUND MACHINES

Filed Dec. 21, 1940 2 Sheets-Sheet 2

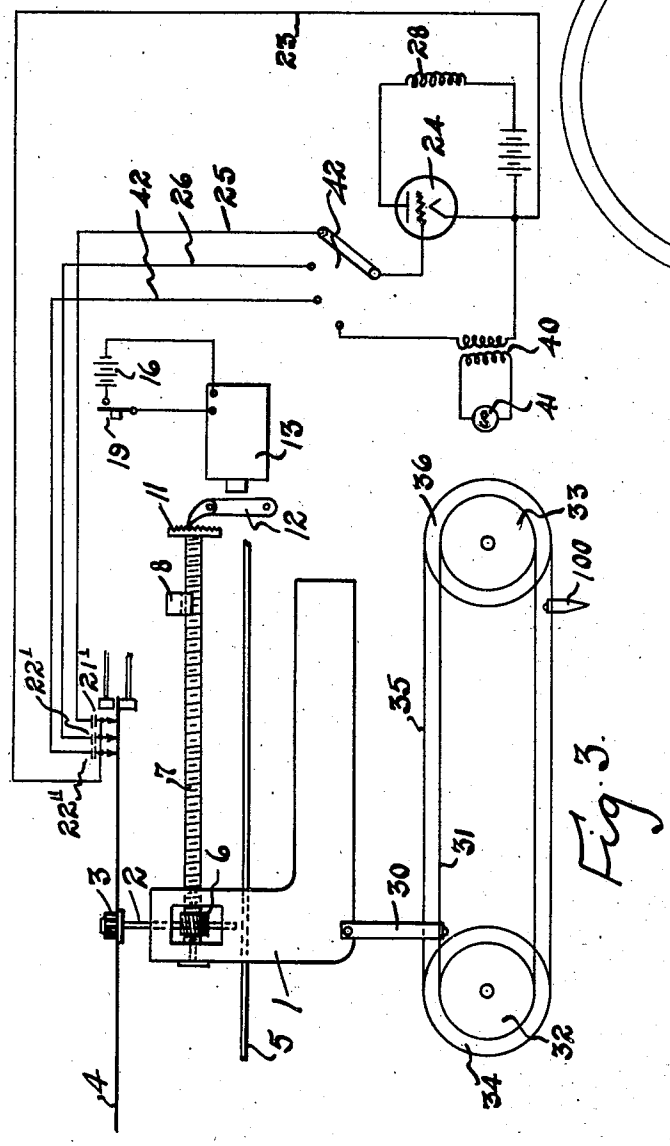

Fig. 3.

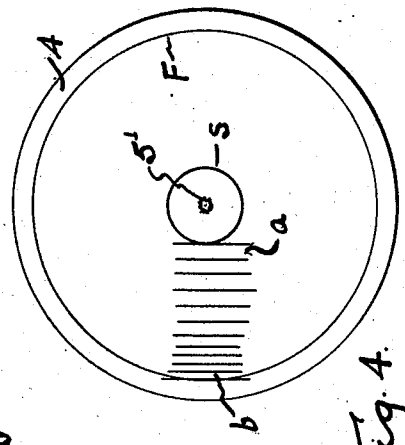

Fig. 4.

INVENTOR.
Henry P. Clausen

BY

Darby & Darby.
Atts.

Patented Sept. 8, 1942

2,294,963

UNITED STATES PATENT OFFICE

2,294,963

VARIABLE SPEED PLAYBACK FOR SOUND MACHINES

Henry Peter Clausen, White Plains, N. Y., assignor to The Gray Manufacturing Company, Hartford, Conn., a corporation of Connecticut

Application December 21, 1940, Serial No. 371,069

8 Claims. (Cl. 179—100.4)

This invention relates to improvements in sound machines of a type employed for the purpose of recording and transcribing dictation, although the following description will make it clear that the invention is broadly applicable to sound recording and reproducing machines.

The general object of the invention is to provide an improved form of indicating mechanism for facilitating the preparation of data slips during the recording of dictation on which corrections, finishing marks and other data may be recorded so that upon playback of the record during transcription the transcriber is informed of and may readily locate the various instructional indications prepared by the dictator for the transcriber's use during transcription.

Another important object of the invention is the provision of an improved means by which the transcriber may by easily operated controls vary the rate of reproduction of the transcribed subject matter to suit the transcriber's transcription ability.

Other and more detailed objects of this invention will become apparent from the following detailed description of several embodiments of the invention when taken in connection with the attached drawings.

This invention resides substantially in the combination, construction, arrangement and relative location of parts, as will be described in detail below.

In the accompanying drawings,

Figure 1 is a diagrammatic view of the elements comprising one form of the combination of the invention herein disclosed;

Figure 2 is an enlarged plan view of a record or instruction sheet used with the mechanism of Figure 1;

Figure 3 is a view similar to that of Figure 1 of a modified combination; and

Figure 4 is a top plan diagrammatic view of one of the record tablets used with the mechanism of this invention.

The device illustrated in the drawings of this application is of the type which is capable of making a permanent record of sounds, as for example the spoken word, upon a record tablet which is preferably in the form of a thin flexible disc of material suitable for embossing, as for example cellulose acetate. From one aspect the invention herein disclosed is in the nature of an improvement upon or an addition to the machines shown in full and complete detail in the copending applications of Barton A. Proctor and others, as for example specifically the copending application of Barton A. Proctor and Ferdinand C. W. Thiede, Serial No. 218,082, filed July 8, 1938.

As disclosed in the above mentioned application in full detail, one form of the mechanism as illustrated herein consists of a carriage 1 mounted upon a suitable support such as the rods 5 so that it may slide back and forth thereon. This carriage has journaled therein a vertical spindle 2 provided with a toothed record receiving pin 3 upon which a record 4 is impaled so as to be keyed to the spindle 2 for rotation therewith. The record tablet 4 is shown in more detail in Figure 4 and is provided with a central notched opening 5' for engagement with the toothed pin 3. Mounted on the shaft 2 is a worm gear 6 which meshes with the threads of the rod 7, and which is secured to the carriage for movement therewith but with respect to which it may rotate on its longitudinal axis. At 8 is shown a nut which engages the threads of the rod 7 and which nut is relatively fixed so that as the rod 7 rotates it is caused to move longitudinally.

In the complete machine as disclosed in the above mentioned application the nut 8 is supported so that it may be moved out of engagement with the rod 7 and into engagement therewith at will. At 10 is a power driven wheel which engages the bottom side of the record disc 4. Mounted above the wheel 10 is an idler wheel 9 which when the machine is in operation moves into engagement with the upper face of the disc 4 so that the disc is caused to rotate by being held in frictional engagement with the wheel 10 by the wheel 9. As disclosed in the above mentioned application it is preferable, although not necessary, that the flexible disc 4 be supported by a table shown in this application which is in the general form of a semi-cylinder so that the record disc assumes a transversely curved shape which does not interfere with its rotation because of its flexibility.

Secured on one end of the rod 7 is a ratchet wheel or disc 11 engaged by an operating lever and pawl mechanism 12 which is caused to impart step-by-step rotation of the rod 7 upon repeated energization of the electro-magnet 13. One terminal of the winding of magnet 13 is connected by wire 14 to one of the movable contacts of a switch 15. This movable contact cooperates with the fixed contact connected to one terminal of a current source 16. The other terminal the current source is connected to the remaining terminal of the winding of the magnet 13 by wire 17. This same terminal of the source 16 is connected to one terminal of the winding 18 of a relay whose other terminal is connected by one of the contacts of a switch 19 the other contact of which returns to the other side of the current source 16 and to another fixed contact of the switch 15. This latter fixed contact cooperates with the movable contact of switch 15 in circuit with a holding circuit switch 20 for the winding 18.

At 20 and 21 are diagrammatically illustrated pickup devices by means of which the record on the tablet is converted into electrical currents representative thereof. These pickup devices are diagrammatically illustrated as of the piezo-electro crystal type well known in the art. One terminal of each of these pickup devices is provided with a common lead 23 which connects to one terminal of the input circuit of an amplifier vacuum tube 24. The other input terminal of the amplifier, that is the grid connection thereon, is connected to the movable contact of a single-pole double-throw switch 27 forming part of the relay 16. The fixed contacts of this switch 27 are connected by the wires 25 and 26 to the remaining terminals of the pickup devices 21 and 20 respectively. Each of these pickup devices has a stylus adapted to engage at spaced points the sound record grooves in the record tablet 4. At the point where the styli engage the record there is provided a rotatable platen wheel or anvil 60 which engages the record on its lower side and serves as a support therefor at the point where the styli bear on the record. Such a wheel would not be necessary where the record 4 is of the rigid type. The output circuit of the vacuum tube amplifier 24 is coupled by a transformer 28 to a sound reproducing device such as an earphone 29.

The carriage 1 is provided with an arm 30 which is connected to a belt 31 which couples together a pair of pulleys 32 and 33. On the shafts with these pulleys respectively, are the larger pulleys 34 and 36, which are coupled by a belt 35. The lower course of the belt 35 is provided with a pointer 100 which acts as an indicator with respect to the chart 37, which for example may be in the form of a slip of paper. This chart is shown in enlarged form and in more detail in Figure 2. The chart comprises a series of horizontal lines suitably spaced as shown in Figure 2 to provide room for data, as will be explained. It is also provided with a series of vertical lines dividing it into vertical columns which are of different widths in different parts thereof. It will be noted that the upper portions of the vertical columns, that is, in the first horizontal space, are of gradually decreasing spacing from left to right, for a purpose to be described later. The portions of the vertical columns overlying the two lowermost horizontal spaces are of uniform width. The lines defining these two portions, that is, the uniformly decreasing portions and the uniform portions, are connected respectively by diagonal lines of different inclinations. The first horizontal space is provided with a series of numbers representative of the number of words in a given length of sound record, which, as will appear later and as is disclosed in full detail in the above-mentioned application, is in the form of a spiral of very slowly decreasing radius. The remaining horizontal spaces are respectively indicated as the correction, rush, and finish portions of the chart in which the corresponding mark may be made in the proper vertical column at the proper point to indicate a correction, the fact that the related dictation is to be rushed in transcription, and the finish of the various units of dictation. By thus ruling the chart, provision is made for the gradually decreasing space traversed by the pointer 100 for each one hundred word units of dictation, while providing uniform spaces within which to make the various indicating marks on the chart. The uniform spacing of the lowermost portions of the vertical columns facilitates and simplifies the accurate placing of the indication marks.

As indicated in Figure 4, when the record is made the recording stylus begins the formation of the spiral record groove at a point near the center of the tablet 4. In a practical form of device the record tablet is about twelve inches in diameter and at the start the recording stylus is applied to the record at a point about two inches from the center thereof. Thus the first complete turn of the spiral would occur at a point as indicated by the circle S in Figure 4. At the end of the record the final spiral would occur at about the point indicated by the circle F, giving a recording having about three and one-quarter inches of extent in a radial direction. The distance between adjacent convolutions of the spiral record is about one-one-hundredth of an inch.

In the operation of the machine the nut 8 is disengaged from the rod 7 and the carriage 1 moved to the extreme right after a record tablet 4 has been impaled on the spindle 2. This record tablet of course has embossed thereon the sound recording groove as described above. During this adjustment of the apparatus wheel 9 is raised as shown in Figure 1 and the pickup devices 20 and 21 are likewise raised so that they will not engage the record tablet as it is moved to the right. When the parts have thus been positioned the stylus of the pickup device 21 will be at the beginning of the sound record spiral. The stylus of the pickup device 21 will either bear upon the blank space within the inner convolution S, or will be in raised position where it will remain until it is desired to use it. To set the apparatus in operation the power device, not shown, connected to wheel 10 is in operation, and as disclosed in the above mentioned application conjointly therewith wheel 9 can be moved down into engagement with the record tablet 4. The rotation of wheel 10 will cause rotation of the tablet 4 and hence spindle 2 and worm 6. The rotation of the worm 6 will cause a proportional rotation of rod 7. If fixed nut 8 is in engagement with the rod 7, the rod will be caused to move longitudinally to the left by reason of its engagement with the fixed nut 8. Thus the stylus of the pickup device 21 will gradually travel through the spiral record groove. Carriage 1 will slowly progress to the left because it is connected to the rod 7, and of course the record tablet will move with it. During this time it is of course rotating with shaft 2. Thus the stylus will gradually traverse the spiral record groove from end to end, beginning at the innermost convolution S and terminating at the outermost convolution F. If desired, as soon as the tablet has moved to the left sufficiently so that the stylus of the pickup device 21 is upon the first convolution, the operator may move the pickup device 20 into position so that its stylus engages the groove. As the machine operates with the various switches in the position shown, the leading stylus of the pickup device 21 will generate a current which is applied to the input circuit of the amplifier 24 through the wires 23 and 25. Thus the transcriber may hear in the headphone 29 an audible reproduction of the dictated matter on the record.

The transcriber will observe the pointer 100 in its relation to chart 37 as that pointer moves from its left position towards the right. The chart 37 will have accompanied the record tablet

4 and will have been applied to the machine at the time the tablet is applied thereto in any suitable form to receive the holder, not shown, as not necessary to an understanding of the invention. Of course, as the record tablet was moved to starting position pointer 100 moved from the position shown in Figure 1 to its extreme left position where it would be opposite the zero line of the chart (see Fig. 2). As the record tablet progresses towards the left the indicator 100 progresses proportionately towards the right over the chart 37, but by reason of the driving mechanism at a magnified or increased speed. The vertical columns of the chart are marked 0, 100, 200, 300, etc., up to 1100. These figures have been selected as exemplary because the standard twelve-inch disc as produced by a recording machine of the type referred to in the above-mentioned application will record about 1100 words. The upper portions of the vertical columns are of gradually decreasing spacing because each unit of 100 words will occupy a decreasingly less radial space on the record as indicated in Figure 4. Thus the first 100 words will take the widest radial space, as indicated at *a* in Figure 4, while the last 100 words will take the smallest radial space, as indicated at *b*. It is believed that the reason for this is obvious since the linear length of the record groove in any two spaces, even though of radially different extent, is the same. Thus the indicator 100 is gradually progressing along the chart 37 during the transcription operation, and as the pointer approaches a correction or finish mark on the chart the transcriber is apprised of the fact. The chart 37 is a magnified representation of the corresponding radial distances in record tablet 4, facilitating the accurate spacing of the various marks on the chart, which of course, was done at the time of recording. This illustrates an important object of the invention, namely that of increasing the accuracy and facilitating the use of a correction and finish marking chart for a machine of this type.

In accordance with a principle illustrated in the above mentioned application the back spacing mechanism may be operated at any time by closing switch 15 to energize the electro-magnet 13 which rotates rod 7 in a reverse direction in a step-by-step movement caused by repeated closing of the switch 15. The magnet operates the lever and pawl 12, which in turn cause a step-by-step rotation of the ratchet disc 11. At this time it is, of course, preferable that the record 4 not rotate and so the pressure wheel 9 would be raised from the disc so that the lower wheel 10 can slip with respect thereto.

In accordance with this invention, however, an improved back spacing function is secured by reason of the presence of the second pickup device 20 which is trailing the first pickup device 21 by a predetermined fixed distance which obviously may be adjusted if desired. To put the pickup device 20 in operation the transcriber momentarily operates switch 19. This momentarily completes a circuit to the relay winding 18, the energization of which closes a holding circuit through switch 20' and switch 15. The operation of the relay also causes switch 27 to be operated so as to connect the pickup devices 20 to the input of the amplifier 24. By this simple operation the transcriber may reach back, so to speak, into the record and have repeated a predetermined amount thereof so that should the transcriber have lost the thread of the dictation or wish to repeat it for any reason, he may do so by simply momentarily operating switch 19. By observing the position of the indicator 100 at the time switch 19 is operated, and if desired by making a mark on the chart, the operator may quickly reposition the pickup devices 20 and 21 after hearing the desired amount of repetition of the record so that the leading pickup device 21 can be easily placed back at the point where its operation was interrupted at the time switch 19 was operated. At the end of the repetition the operator momentarily operates switch 15 to break the holding circuit through the switch 20', putting the pickup device 21 back into operation, at which time, of course, it will be put back as explained above, thereby moving it back if its support is constructed to perform this function, which it may be, as indicated in the above mentioned application, or it may be simply raised and the machine back spaced by repeated closing of switch 15 until the indicator 100 is back to the special mark applied for the purpose as described above.

This same mechanism performs another very useful function which is believed to be novel. Since the record is being driven at a fixed rate of speed as determined by the relative positions of the styli and the driving wheel 10, it is possible to reproduce the dictation at a slower than normal rate of speed. The normal rate of speed can be said to be that at which the dictation is produced by the stylus of the pickup device 21. If a transcriber finds that the rate of dictation is too fast he need only operate the switch 19 to throw pickup device 20 into operation. The record will then be reproduced at a slower speed. Of course, there will be a repetition represented by the amount the stylus of the pickup device 20 trails that of the pickup device 21, but after the completion of this the reproduction will progress on to the end of the record at a slower rate no doubt more suitable to the skill of the transcriber.

This ability to vary the rate of reproduction is an important function of this invention and is therefore emphasized by the modification of the apparatus shown in Figure 3. The same parts have been given the same reference numerals in this figure, and it is only necessary to describe the different features of this arrangement. In this case there are three pickup devices 21', 22' and 22''. The common terminal of all of these pickup devices is connected as before by the wire 23 to the input circuit of the amplifier 24. A suitable alternating current signal source 41 is coupled to this input circuit by a transformer 40. The grid lead of the circuit is completed through a multiple position switch 42 having contacts connected by the leads 25, 26 and 42 to the other terminals of the pickup devices respectively. A contact is provided for completing the input circuit of the amplifier through switch 42 independently of any of these three leads.

With this arrangement in operation the system would normally function with switch 42 closed in the position shown in Figure 3. At this time the record would be reproduced by the pickup device 21'. Should a function equivalent to back spacing by means of the ratchet mechanism be desired, switch 42 would be closed on the contact connected to the lead 26, thereby putting the pickup device 22' in circuit, or by closing switch 42 on the contact connected to lead 42, putting the pickup device 22'' in circuit. With this arrangement it will be seen that the transcriber has the selection of two different amounts

of back spacing. By the same operations it will be seen that the transcriber also has the selection of three speeds of reproduction. The fast speed of reproduction would be secured with the pickup device 21', a slower speed would be secured with the pickup device 22', and a still slower speed with the pickup device 22''. Although the chart 37 is not shown in Figure 3, it can as before be used in conjunction with the indicating mechanism of which the pointer 100 is a part.

As a feature of this invention, if desired, the fourth contact of switch 42 is provided so that should the operator move the switch beyond the contact connected to switch 42, he would complete the input circuit so that the signal from the source 41 would be impressed upon his headphone, coupled of course to the coil of the output circuit of the amplifier 24 as before to signal to him this fact.

From the above description it will be apparent to those skilled in the art that the features of this invention may be employed in other physical forms. As an example of this it is intended by Figure 3 to show the invention as applied to a machine employing a rigid record tablet form which in this case does not need the backing up platen or rotary anvil wheel 60 shown in Figure 1. I do not, therefore, desire to be strictly limited to this disclosure as given for purposes of illustration, but rather to the scope of the claims granted me.

What is claimed is:

1. In a sound reproducing machine the combination including means for supporting a record tablet for rotation, means having fixed radially spaced styli for converting the record on said tablet into electrical currents, said styli being spaced to engage different radial points in the record on said tablet, means for causing relative movement between said tablet and said converting means at a constant linear speed and means for selecting the converting means whereby the rate of sound reproduction may be varied.

2. In a sound recording machine the combination including means for supporting a record tablet, fixed means having styli for converting the record on said tablet into electrical currents, said styli engaging radially spaced points in the record on said tablet, means for causing rotational and radial movement of said tablet with respect to said converting means, and means for selectively converting the said electrical currents into sounds whereby the rate of sound reproduction may be varied.

3. In a sound reproducing machine the combination including a carriage, a record disc supported for rotation on said carriage, means for effecting rotation of the record disc at constant linear speed, means for causing movement of said carriage, means having styli for converting the record on said tablet into electrical currents, said styli being spaced with respect to said record disc so as to engage it at radially different points, and selectively controlled means for converting independently the said electrical currents into sounds whereby portions of the record reproduced by one stylus may be repeated by another and the rate of sound reproduction selectively varied.

4. In a sound reproducing machine the combination including a carriage, a record disc supported for rotation on said carriage, means for effecting rotation of the record disc, at constant circumferential speed, means for causing movement of said carriage, means having styli for converting the record on said tablet into electrical currents, said styli being spaced with respect to said record disc so as to engage it at radially different points, and means selectively controlled for converting electrical currents produced by any one of said styli into sounds whereby the rate of reproduction of the record may be selected.

5. In a sound reproducing machine the combination including a carriage, a record disc supported for rotation on said carriage, means for effecting rotation of the record disc at a constant linear speed, means for causing movement of said carriage, means having styli for converting the record on said tablet into electrical currents, said styli being spaced with respect to said record disc so as to engage it at radially different points, and means selectively controlled for converting electrical currents produced by any one of said styli into sounds whereby the rate of reproduction of the record may be selectively varied.

6. In a sound reproducing machine the combination including a carriage supported for rectilinear movement, a spindle journaled on said carriage and adapted to receive a record tablet, a threaded rod connected to said carriage so as to be rotatable, a fixed nut engaging said rod, a gear on said spindle engaging the threads on said rod, means for engaging a record disc when impaled on said spindle to cause rotation of the spindle and the rod whereby the carriage moves radially as the disc revolves at constant linear speed, means having styli which when in engagement with the record on the disc generate electrical currents respresentative of the sounds recorded on the disc, means for converting the electrical currents into sounds, and means for selectively connecting said last means to said styli means, whereby the rate of sound reproduction may be selected.

7. In an apparatus of the type described the combination comprising means for supporting a circular record tablet for rotation and bodily movement in a radial direction including at least one fixed driven friction wheel positioned to engage the record tablet when in position, a plurality of fixed sound reproducing devices each having a stylus positioned to engage the record tablet, said reproducing devices generating currents representative of the sounds on the record tablet, by reason of the engagement of their styli with the tablet, means for converting said currents into sounds and selective control means for connecting any one of said reproducing devices to said converting means, whereby portions of the record reproduced by one of said reproducing means may be repeated by another and at a different rate.

8. In an apparatus of the type described the combination comprising means for supporting a circular record tablet for rotation and bodily movement in a radial direction including at least one fixed driven friction wheel positioned to engage the record tablet when in position, a plurality of fixed sound reproducing devices each having a stylus positioned to engage the record tablet, said reproducing devices generating currents representative of the sounds on the record tablet, by reason of the engagement of their styli with the tablet, means for converting said currents into sounds and selective control means for connecting any one of said reproducing devices to said converting means, whereby the speed of sound reproduction may be selectively varied.

HENRY PETER CLAUSEN.