(12) STANDARD PATENT (11) Application No. **AU 2008336853 B2**
(19) AUSTRALIAN PATENT OFFICE

(54) Title
Armature core, armature, rotary electric machine and compressor

(51) International Patent Classification(s)
H02K 1/18 (2006.01) ***H02K 1/14*** (2006.01)
F04C 29/00 (2006.01)

(21) Application No: **2008336853** (22) Date of Filing: **2008.12.08**

(87) WIPO No: **WO09/078300**

(30) Priority Data

(31) Number	(32) Date	(33) Country
2007-324859	**2007.12.17**	**JP**
2008-187545	**2008.07.18**	**JP**

(43) Publication Date: **2009.06.25**
(44) Accepted Journal Date: **2012.11.08**

(71) Applicant(s)
Daikin Industries, Ltd.

(72) Inventor(s)
Yasumoto, Ryuuji;Asano, Yoshinari;Kifuji, Nobuyuki

(74) Agent / Attorney
Spruson & Ferguson, Level 35 St Martins Tower 31 Market Street, Sydney, NSW, 2000

(56) Related Art
WO2003/047070
JP 10-164779
JP 61-010930

(12) 特許協力条約に基づいて公開された国際出願

(19) 世界知的所有権機関
国際事務局

(43) 国際公開日
2009 年6 月25 日 (25.06.2009)

PCT

(10) 国際公開番号
WO 2009/078300 A1

(51) 国際特許分類:
H02K 1/18 (2006.01) *H02K 1/14* (2006.01)
F04C 29/00 (2006.01)

(21) 国際出願番号: PCT/JP2008/072270

(22) 国際出願日: 2008 年12 月8 日 (08.12.2008)

(25) 国際出願の言語: 日本語

(26) 国際公開の言語: 日本語

(30) 優先権データ:
特願 2007-324859
2007 年12 月17 日 (17.12.2007) JP
特願2008-187545 2008 年7 月18 日 (18.07.2008) JP

(71) 出願人 (米国を除く全ての指定国について): ダイキン工業株式会社 (DAIKIN INDUSTRIES, LTD.) [JP/JP]; 〒5308323 大阪府大阪市北区中崎西２丁目４番１２号 梅田センタービル Osaka (JP).

(72) 発明者; および

(75) 発明者/出願人 (米国についてのみ): 浅野 能成 (ASANO, Yoshinari) [JP/JP]; 〒5258526 滋賀県草津市岡本町字大谷１０００番地の２ ダイキン工業株式会社 滋賀製作所内 Shiga (JP). 安本 竜志 (YASUMOTO, Ryuuji) [JP/JP]; 〒5258526 滋賀県草津市岡本町字大谷１０００番地の２ ダイキン工業株式会社 滋賀製作所内 Shiga (JP). 木藤 敦之 (KIFUJI, Nobuyuki) [JP/JP]; 〒5258526 滋賀県草津市岡本町字大谷１０００番地の２ ダイキン工業株式会社 滋賀製作所内 Shiga (JP).

(74) 代理人: 吉竹 英俊, 外 (YOSHITAKE, Hidetoshi et al.); 〒5400001 大阪府大阪市中央区城見１丁目４番７０号住友生命ＯＢＰプラザビル１０階 Osaka (JP).

(81) 指定国 (表示のない限り、全ての種類の国内保護が可能): AE, AG, AL, AM, AO, AT, AU, AZ, BA, BB, BG, BH, BR, BW, BY, BZ, CA, CH, CN, CO, CR, CU, CZ, DE, DK, DM, DO, DZ, EC, EE, EG, ES, FI, GB, GD, GE, GH, GM, GT, HN, HR, HU, ID, IL, IN, IS, KE, KG, KM, KN, KP, KR, KZ, LA, LC, LK, LR, LS, LT, LU, LY, MA, MD, ME, MG, MK, MN, MW, MX, MY, MZ, NA, NG, NI, NO, NZ, OM, PG, PH, PL, PT, RO, RS, RU, SC, SD, SE, SG,

[続葉有]

(54) Title: ARMATURE MAGNETIC CORE, ARMATURE, ROTATING ELECTRIC MACHINE, AND COMPRESSOR

(54) 発明の名称: 電機子用磁芯、電機子、回転電機及び圧縮機

[図1]

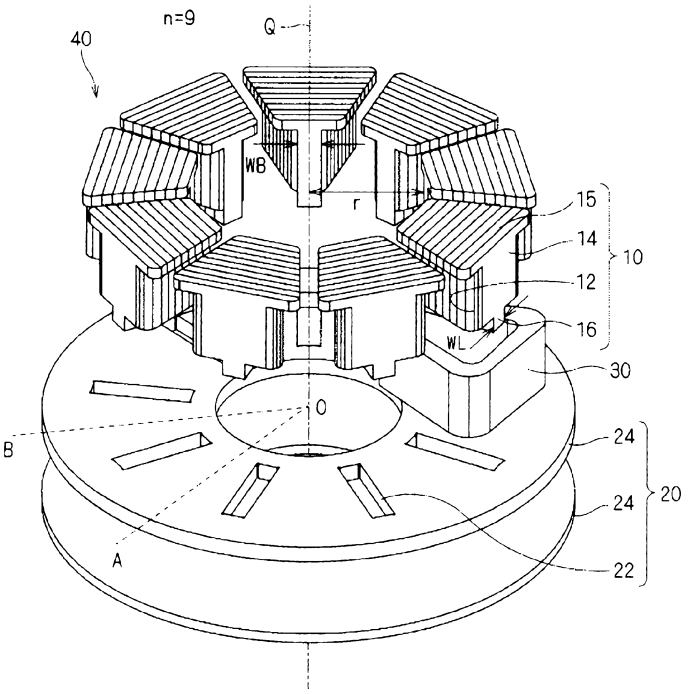

(57) Abstract: Disclosed is an armature magnetic core (10) which is formed by laminating a plurality of magnetic plates (12) punched in advance into a predetermined shape. The armature magnetic core (10) comprises prism portions (14) wound with armature coils (30), and first rectangular parallelepiped portions (16) to be buried in the recesses (22) of a yoke (20). The sectional shape of the prism portions (14) in a plane normal to a rotation axis (Q) is formed into a substantially trapezoidal shape, and the sectional shape of the first rectangular parallelepiped portions (16) in that plane is formed into a substantially rectangular shape. When the magnetic plates (12) are to be punched out, the punching step of the portions to constitute the prism portions (14) and the punching step of the portions to constitute the first rectangular parallelepiped portions (16) are separately performed. Near the boundaries of those two portions, the punchable areas of the molds to be used for the punching steps are overlapped by a predetermined width, thereby to avoid stress concentrations at the boundaries.

[続葉有]

WO 2009/078300 A1

SK, SL, SM, ST, SV, SY, TJ, TM, TN, TR, TT, TZ, UA, UG, US, UZ, VC, VN, ZA, ZM, ZW.

(84) 指定国 (表示のない限り、全ての種類の広域保護が可能): ARIPO (BW, GH, GM, KE, LS, MW, MZ, NA, SD, SL, SZ, TZ, UG, ZM, ZW), ユーラシア (AM, AZ, BY, KG, KZ, MD, RU, TJ, TM), ヨーロッパ (AT, BE, BG, CH, CY, CZ, DE, DK, EE, ES, FI, FR, GB, GR, HR, HU, IE, IS, IT, LT, LU, LV, MC, MT, NL, NO, PL, PT, RO, SE, SI, SK, TR), OAPI (BF, BJ, CF, CG, CI, CM, GA, GN, GQ, GW, ML, MR, NE, SN, TD, TG).

添付公開書類:
— 国際調査報告書

(57) 要約: 本発明は、予め定められた形状に打抜かれた複数の磁性体板（１２）を積層して形成される電機子用磁芯（１０）において、電機子巻線（３０）が巻回される角柱部（１４）と、ヨーク（２０）の凹部（２２）に埋設される第１直方体部（１６）とを備える。回転軸（Ｑ）を法線とする面における角柱部（１４）の断面形状は略台形状に形成し、当該面における第１直方体部（１６）の断面形状は略長方形状に形成する。磁性体板（１２）を打抜く際には、角柱部（１４）を構成する部位の打抜き工程と第１直方体部（１６）を構成する部位の打抜き工程とは分離して行い。両部位の境界近傍では、打抜き工程に用いる金型の打抜き可能領域を所定の幅だけ重複させ、境界領域への応力集中を避ける。

2008336853 09 Jun 2010

ARMATURE CORE, ARMATURE, ROTARY ELECTRIC MACHINE AND COMPRESSOR

Technical Field

The present invention relates to an armature core and an armature, and particularly, is applicable to an axial gap rotary electric machine.

Background Art

A rotary electric machine includes an armature and a field element. In particular, in an axial gap rotary electric machine, an armature and a field element are disposed so as to be opposed to each other along a rotation axis, through an air gap extending along a surface perpendicular to the rotation axis. The armature includes a yoke, teeth provided to the yoke, and a coil that is wound with the teeth being a core. The field element is rotated by a rotating magnetic field generated in the armature.

A magnetic flux flows through the armature by causing an alternating current to flow through the coil, whereby the magnetic flux causes an eddy current in the yoke and the teeth.

The magnetic flux flows along the rotation axis in the teeth, and thus in a case where electromagnetic steel plates laminated along a direction parallel to the rotation axis are employed as the teeth, the magnetic flux cuts across an interface of the laminated electromagnetic steel plates. In this case, a magnetic resistance of a magnetic path in the teeth increases, and an eddy current is easily generated in the teeth. On the other hand, when electromagnetic steel plates laminated along a direction perpendicular to the rotation axis are used as the teeth, a magnetic flux that cuts across the interface of the electromagnetic steel plates can be reduced, which reduces an eddy current. The technology as described above is disclosed in Patent Document 1.

When opposed surfaces of the adjacent teeth are made to be parallel to each other, a space factor of an armature coil is improved. In a case where the above-mentioned teeth are achieved by laminated electromagnetic steel plates, the electromagnetic steel plates need to be punched in different shapes. The technology as described above is disclosed in Patent Document 2 and Patent Document 3.

Patent Document 1: WO 03/047070

Patent Document 2: Japanese Patent Application Laid-Open No. 2005-287217

Patent Document 3: Japanese Patent Application Laid-Open No. 2005-224054

2008336853 11 Oct 2012

In the technologies disclosed in the above-mentioned Patent Document 1 to Patent Document 3, the teeth formed of laminated electromagnetic steel plates are buried in the holes provided in the yoke. When the opposed surfaces of the adjacent teeth are made to be parallel to each other, the surfaces become non-parallel to the direction in which the electromagnetic steel plates extend. In a case where the electromagnetic steel plates are punched in different shapes and laminated to form the teeth for achieving the above-mentioned non-parallel surfaces, if examined closely, those surfaces have a step-like shape.

Normally, the holes provided in the yoke do not correspond to the above-mentioned step-like shape. Accordingly, in a case where the teeth are buried in the holes provided in the yoke, there is generated, between the non-parallel surfaces and the holes, a triangular gap (clearance) with a thickness of the electromagnetic steel plate being one side. This clearance becomes an air gap for the magnetic flux extending from the teeth to the yoke, and a magnetic resistance increases, accordingly leading to an increase in copper loss. The above-mentioned Patent Document 1 or Patent Document 3 does not mention the above-mentioned clearance.

Any discussion of documents, acts, materials, devices, articles or the like which has been included in the present specification is solely for the purpose of providing a context for the present invention. It is not to be taken as an admission that any or all of these matters form part of the prior art base or were common general knowledge in the field relevant to the present invention as it existed before the priority data of each claim of this application.

Throughout this specification, unless the context requires otherwise, the word "comprise", or variations such as "comprises" or "comprising", will be understood to imply the inclusion of a stated element, integer or step, or group of elements, integers or steps, but not the exclusion of any other element, integer or step, or group of elements, integers or steps.

Summary

An aspect of the present invention provides an armature comprising:

a plurality of armature cores; and

a yoke,

wherein:

each of the armature cores is formed by laminating a plurality of first magnetic plates and comprises:

a prism portion having a length in a first direction perpendicular to a lamination direction in which said first magnetic plates are laminated and a height in a second direction perpendicular to said lamination direction and said first direction, the length gradually increasing a width in all or part in the lamination direction; and

2008336853 11 Oct 2012

a first rectangular solid portion being adjacent to said prism portion in said second direction and having a uniform length in said first direction,

wherein the prism portion and the rectangular solid portion are lamination of integrally punched magnetic plates;

the yoke includes a recessed portion in which said first rectangular solid portion is buried;

the plurality of armature cores are circularly arranged, on said yoke, with a rotation axis parallel to said second direction as a center; and

edges of said prism portions of adjacent ones of said plurality of armature cores are formed or arranged so as to be parallel to each other, the edges being opposed to each other.

Preferably, each of the armature cores further comprising a column portion being adjacent to said prism portion in said second direction, being adjacent to said first rectangular solid portion in said lamination direction, and having a length in said first direction decreasing, along said lamination direction, from a length of said first rectangular solid portion in said first direction.

Preferably, the length of said first rectangular solid portion in said first direction is equal to or smaller than a minimum value of the length of said prism portion in said first direction.

Preferably, a length of said first rectangular solid portion in said first direction is larger than a maximum value of the length of said prism portion in said first direction.

Preferably, each of the armature cores further comprising a flanged portion at an end portion of said first rectangular solid portion on a side opposite to said prism portion, and

a length of said flanged portion in said first direction is larger than the length of said first rectangular solid portion in said first direction.

Preferably, the armature further comprises:

an armature coil wound around said prism portion.

Preferably, the armature further comprises an elastic member urging said first rectangular solid portion buried in said recessed portion in a radial direction with said rotation axis being a center.

Preferably, the armature further comprises:

an armature coil wound around said prism portion; and

an elastic member urging said armature core in said decreasing direction,

wherein said first rectangular solid portion and said column portion are buried in the recessed portion of the yoke.

2008336853 11 Oct 2012

Preferably, each of the armature cores further includes, on a side closer to said rotation axis than said first rectangular solid portion, a second rectangular solid portion having the length in said first direction smaller than that of said first rectangular solid portion; and

a length of said recessed portion fitted with said second rectangular solid portion in said lamination direction is larger than a length of said second rectangular solid portion in said lamination direction.

Preferably, said first magnetic plate having an end portion in said lamination direction among said first magnetic plates includes said elastic member.

Preferably, said elastic member includes a projection projecting, at the end portion in said lamination direction, from said first magnetic plate toward said recessed portion.

Preferably, the armature further comprises:

an armature coil including a separately prepared air-core coil attached to said prism portion.

Preferably, the armature further comprises:

an armature coil series-wounded around said prism portion directly or via an insulator.

Preferably, said yoke is formed by laminating a plurality of second magnetic plates in said rotation axis direction.

Preferably, said yoke is formed by laminating a plurality of second magnetic plates in said rotation axis direction; and

at least one of said plurality of second magnetic plates includes a projection projecting from an edge of said recessed portion toward said recessed portion.

Preferably, a length of said projection from the edge of said recessed portion is smaller than a depth of said recessed portion.

Preferably, said second magnetic plate on one side in said rotation axis direction with respect to said second magnetic plate including said projection among said second magnetic plates includes a notch accommodating said projection at a position corresponding to said projection.

Preferably, said yoke is formed by powder compacting.

Preferably, said recessed portion of the yoke is open also toward an outer side in said radial direction with said rotation axis being a center.

Preferably, said recessed portion of the yoke is open also toward an inner side in said radial direction with said rotation axis being a center.

Preferably, a length of said first rectangular solid portion in said first direction is equal to or smaller than a length obtained by dividing a circumference of a circle by the number of said armature cores buried in said recessed portions of said yoke, where the circle having, as a radius,

2008336853 11 Oct 2012

a length from said rotation axis being a center to a position of said armature core closest to said rotation axis.

Preferably, the length of said first rectangular solid portion in said first direction is substantially equal to the length obtained by dividing the circumference of a circle by the number of said armature cores buried in said recessed portions of said yoke, where the circle having, as a radius, the length from said rotation axis being the center to the position of said armature core closest to said rotation axis.

Preferably, said yoke is short-circuited on an outer side in said radial direction than said armature core and on a side opposite to a side on which said armature cores are buried in said yoke.

Preferably, said yoke further includes a bottom on a side opposite to a side on which said armature cores are buried.

Preferably, said bottom and said second magnetic plates are composed of thin plates laminated in said rotation axis direction; and

a thickness of the thin plate constituting said bottom in said rotation axis direction is larger than a thickness of the thin plate constituting one of said second magnetic plates in said rotation axis direction.

Preferably, said bottom is formed of non-magnetic metal.

Another aspect of the present invention provides a rotary electric machine including: the armature described above; and a field element disposed so as to be opposed to the armature core along the rotation axis.

Preferably, the field element includes a magnet generating a magnetic field flux.

Another aspect of the present invention provides a compressor in which the rotary electric machine described above is mounted.

According to an embodiment of the present invention, the armature core includes a plurality of laminated first magnetic plates, and thus is capable of reducing an eddy current. By winding the armature coil around the prism portion and burying the first rectangular solid portion in the yoke, an axial gap armature can be obtained. When a plurality of armature cores are provided in the yoke, a side on which the prism portion has a larger width is provided on the outer circumferential side, whereby the armature cores efficiently occupy the space. Moreover, by employing the first rectangular solid portion for the portion buried in the yoke, a clearance between the recessed portion included in the yoke and the first rectangular solid portion can be reduced irrespective of the shape of the prism portion, leading to a reduction in magnetic resistance between the teeth and the yoke.

2008336853 11 Oct 2012

According to an embodiment of the present invention, a contact area between the armature core and the recessed portion in the first direction can be increased.

According to an embodiment of the present invention, it is easy to attach a separately prepared air-core coil to the prism portion from the rectangular solid portion side. In addition, the first magnetic plate can be punched with ease.

According to an embodiment of the present invention, an area in cross section of the first rectangular solid portion does not become smaller with respect to the prism portion, and thus the magnetic flux of the prism portion flows into the yoke via the first rectangular solid portion without causing magnetic saturation. Accordingly, a magnetic resistance between the armature core and the yoke is small. In addition, the first magnetic plate can be punched with ease.

According to an embodiment of the present invention, when the flanged portion is caused to abut the yoke described below in the rotation axis direction, it is possible to prevent or suppress the armature core from becoming detached from the yoke even if the armature core is attracted from the prism portion side.

According to an embodiment of the present invention, when the coil having the uniform width is provided in a gap between the prism portions, the gap between the armature core and the yoke is reduced while improving a space factor of the armature coil, leading to an increase in fastening strength therebetween and a reduction in magnetic resistance therebetween.

According to an embodiment of the present invention, the armature core can be firmly held by the yoke, which prevents or suppresses rattling.

According to an embodiment of the present invention, a contact area between the armature core and the recessed portion in the first direction can be increased, which reduces a gap of the magnetic flux flowing in the first direction.

According to an embodiment of the present invention, the armature core is urged by the elastic member, and thus a contact area between the armature core and the recessed portion in the first direction can be increased, which reduces a gap of the magnetic flux flowing in the first direction.

According to an embodiment of the present invention, in a case where the armature core is buried in the recessed portion, part of the recessed portion can push and bend the elastic member with ease.

According to an embodiment of the present invention, in a case where the armature core is buried in the recessed portion, part of the recessed portion pushes and bends the projection. Accordingly, the projection can be employed as the elastic member, which facilitates manufacture.

2008336853 11 Oct 2012

According to an embodiment of the present invention, an air-core coil having a high space factor is prepared separately, which can be employed as an armature coil.

According to an embodiment of the present invention, the armature coil can be firmly fastened to the armature core, which prevents or suppresses winding failure.

According to an embodiment of the present invention, the yoke can be formed of electromagnetic steel plates having little iron loss.

According to an embodiment of the present invention, in a case where the armature core is buried in the recessed portion, part of the armature core pushes and bends the projection. Accordingly, the projection can be employed as the elastic member, which facilitates manufacture.

According to an embodiment of the present invention, in a case where the recessed portion does not penetrate through the yoke, when the armature core is buried in the recessed portion, it is possible to prevent the elastic member from being sandwiched between the bottom of the recessed portion and the bottom of the armature core.

According to an embodiment of the present invention, the pushed and bent projection is accommodated in the notch, whereby the gap between the armature core and the recessed portion can be reduced by the thickness of the projection, that is, the thickness of the magnetic plate including the projection.

According to an embodiment of the present invention, the natural frequency is higher compared with the case where laminated steel plates having insufficient adherence between laminated layers are used for formation, which increases vibration resistance. In particular, there is obtained a smooth flow of the magnetic flux to the side (bottom of the yoke) opposite to the side on which the armature core is buried in the yoke. In particular, this is suitable in a configuration where the armature core further includes a column portion being adjacent to the prism portion in the second direction, being adjacent to the first rectangular solid portion in the lamination direction, and having a length in the first direction decreasing, along the lamination direction, from a length of the first rectangular solid portion in the first direction.

According to an embodiment of the present invention, the first rectangular solid portion can be inserted from the outer side in the radial direction, and thus the armature core is easily buried in the recessed portion. In particular, this is suitable for the case where a length of the first rectangular solid portion in the first direction is larger than a maximum value of the length of the prism portion in the first direction.

According to an embodiment of the present invention, the first rectangular solid portion can be inserted from the inner side in the radial direction, and thus the armature core is easily buried in the recessed portion. In particular, this is suitable for the case where a length of the

2008336853 11 Oct 2012

first rectangular solid portion in the first direction is larger than a maximum value of the length of the prism portion in the first direction. Further, compared with a configuration where the first magnetic plate having an end portion in the lamination direction among the first magnetic plates includes the elastic member, in the case where the armature rotates, this is advantageous in that the armature core is hard to become detached from the recessed portion even when the centrifugal force is exerted on the armature core by rotation.

According to an embodiment of the present invention, the armature cores can be buried in the yoke without the first rectangular solid portions of the adjacent armature cores interfering with each other.

According to an embodiment of the present invention, a large amount of magnetic flux linkage can be obtained with effective use of the space that one first rectangular solid portion can occupy without interfering with the other first rectangular solid portion, and the back yoke does not cover the entire first rectangular solid portion of one armature core. Therefore, an eddy current surrounding the first rectangular solid portion is not generated in the back yoke.

According to an embodiment of the present invention, in the case where the armature rotates, the short-circuited part on the outer side of the yoke in the radial direction can suppress the armature core from becoming detached or moving even when the centrifugal force is exerted on the armature core by rotation.

According to an embodiment of the present invention, the armature core can be held reliably.

According to an embodiment of the present invention, the armature core can be held more reliably. In addition, the strength of the bottom that is preferably used for securing strength can be increased while reducing iron loss of the second magnetic plate that is preferably used as a magnetic path.

According to an embodiment of the present invention, even when the twenty-fourth invention is employed, the eddy current can be reduced by preventing the magnetic flux from flowing through the bottom.

According to an embodiment of the present invention, an output of the rotary electric machine is increased.

According to an embodiment of the present invention, though the magnetic flux flowing through the teeth contains a large amount of harmonics and the magnetic flux density is increased, torque can be generated with high efficiency because the effect of reducing iron loss by the teeth is high.

According to an embodiment of the present invention, a rotary electric machine that is small in size and has high torque is employed, whereby loss in compressing a refrigerant is

2008336853 11 Oct 2012

small. In particular, this contributes to a further reduction in copper loss while reducing iron loss, and thus power consumption can be reduced by applying the rotary electric machine to an air conditioner or a compressor for refrigeration machine that is rotated at low speed and has a high ratio of steady operation.

Brief Description of Drawings

FIG. 1 is an exploded perspective view of an armature according to a first embodiment of the present invention;

FIG. 2 is an assembly view of the armature;

FIG. 3 is a view describing an example of punching a first magnetic plate;

2008336853 09 Jun 2010

FIG. 4 is an exploded perspective view of an armature according to a second embodiment of the present invention;

FIG. 5 is a view describing an example of punching a first magnetic plate;

FIG. 6 is a partially enlarged view of the armature;

FIG. 7 is a partially enlarged view of an armature according to a modification;

FIG. 8 is an exploded perspective view of an armature according to a third embodiment of the present invention;

FIG. 9 is an assembly view of the armature;

FIG. 10 is a view describing an example of punching a first magnetic plate;

FIG. 11 is a plan view showing, as an example, part of a yoke employed in an armature according to a fourth embodiment of the present invention;

FIG. 12 is an enlarged perspective view showing part of a recessed portion;

FIG. 13 is a cross-sectional view showing enlarged part of an armature core buried in the recessed portion;

FIGS. 14A and 14B are views showing the armature core;

FIG. 15 is a perspective view of an armature core according to a modification;

FIGS. 16A and 16B are cross-sectional views showing a state in which an armature core is disposed in a yoke;

FIG. 17 is a plan view showing a rectangular solid portion according to a modification as an example;

FIG. 18 is an exploded perspective view showing a rotary electric machine according to the present invention as an example; and

FIG. 19 is a cross-sectional view showing a compressor according to the present invention as an example.

Best Modes for Carrying Out the Invention

Hereinafter, preferred embodiments of the present invention are described with reference to the drawings. Note that in the drawings including FIG. 1, only elements related to the present invention are shown.

First Embodiment

FIG. 1 is an exploded perspective view of an armature 40 according to a first embodiment of the present invention, which shows the armature 40 disassembled in a direction along a rotation axis Q. FIG. 2 is an assembly view of the armature 40. As shown in FIG. 1, the armature 40 includes armature cores 10, a yoke 20 and armature coils 30, which is applied to, for example, an axial gap motor (not shown). Note that

2008336853 09 Jun 2010

unless particularly noted in the present application, the armature coil refers to a mode in which wires are wound as a whole, not to each wire constituting this. This holds true for the drawings as well. Leading lines in start and end of winding and wire connection thereof are also omitted in the drawings. FIG. 2 shows only one armature coil, and other armature coils are not shown for showing a form of the armature core.

The armature core 10 is formed by laminating a plurality of magnetic plates (corresponding to the "first magnetic plates" in Means to Solve the Problem) 12. In the magnetic plates 12, a width of a length WB in a first direction perpendicular to its laminate direction gradually increases from one side toward the other side in the lamination direction. Here, the one side corresponds to an inner circumferential side when a plurality of armature cores 10 are circularly arranged with the rotation axis Q being the center, while the other side corresponds to an outer circumferential side. In the vicinity of an end portion of the other side, there is provided a portion in which the width of the length WB in the first direction decreases from the one side toward the other side of the lamination direction.

The armature core 10 laminated in this manner includes a prism portion 14 whose height is the rotation axis (corresponding to the "second direction" in Means to Solve the Problem) Q perpendicular to the lamination direction as well as the first direction. Provided around the prism portion 14 is the armature coil 30 with the rotation axis Q being an axis of winding. Although the term "prism" is used here, a shape in which a corner is provided with a fillet or the like to be rounded is included. In actuality, though a laminated surface is composed of minute (for a thickness of one steel plate) steps because punched steel plates are laminated, this level of step is ignored, and the term "prism portion" is used.

That is, as shown, an edge of the prism portion 14 that is parallel to the rotation axis X may be chamfered. Accordingly, the length WB is not necessarily limited to a case where the length WB gradually increases its width from the inner circumference side toward the outer circumference side.

Further, the armature core 10 includes a first rectangular solid portion 16 that is adjacent to the prism portion 14 in the rotation axis Q direction and has a uniform length WL in the first direction. Moreover, the armature core 10 may include, on the side opposite to the first rectangular solid portion 16 with respect to the prism portion 14, a flanged member 15 extending beyond the prism portion 14 in an in-plane direction with the rotation axis Q being a normal. In other words, the armature core 10 includes the flanged member 15 on one side (upper side of the view) of the prism portion 14 having a

2008336853 09 Jun 2010

height in the rotation axis Q direction and includes the first rectangular solid portion 16 on the other side (lower side of the view). Note that the flanged member 15 is not necessarily required to be formed so as to have a uniform width in the lamination direction of magnetic plates 12, and a width thereof may change along a radial direction. In particular, a side of the prism portion in a circumferential direction is desired to be parallel to a side of a flanged member in the circumferential direction.

The length WL of the first rectangular solid portion 16 in the first direction is equal to or smaller than a length $2\pi r/n$ obtained by dividing $2\pi r$ by n, where $2\pi r$ represents a circumference of a circle whose radius is a length r from the rotation axis Q as the center to a position of the armature core 10 closest to the rotation axis Q, and n represents the number of armature cores 10 buried in recessed portions 22 of the yoke 20. Here, though FIG. 1 shows a case where the number n of armature cores 10 is nine as an example, an appropriate change may be made depending on, for example, the performance required for the rotary electric machine. Note that this condition is satisfied when the length (WL) of the first rectangular solid portion in the first direction is equal to or smaller than a minimum value of the length (WB) of the prism portion in the first direction.

The yoke 20 is formed by laminating a plurality of magnetic plates (corresponding to the "second magnetic plates" in Means to Solve the Problem) 24 in the rotation axis Q direction, which includes the recessed portions 22 in which the first rectangular solid portions 16 of the armature cores 10 can be buried. Note that though the recessed portion 22 may penetrate the yoke 20 (not shown), when the recessed portion 22 dose not penetrate the yoke 20 and is formed at a predetermined depth (see FIG. 1), the strength of the yoke 20 is increased and a depth for burying the armature core 10 is defined. Further, the yoke 20 is not necessarily required to be formed by laminating a plurality of magnetic plates 24, and may be integrally formed by powder compacting formation or the like. Even if a recessed portion penetrates a yoke, a burying depth in the yoke is defined by a gap between a prism portion and a first rectangular solid portion.

With respect to the above-mentioned yoke 20, a plurality of armature cores 10 are circularly arranged with the rotation axis Q being the center on the yoke 20, and edges of the prism portion 14 and the flanged member 15 adjacent to each other are formed or arranged so as to be parallel to each other. Note that appropriate selection is made between the following. By giving priority to a size of the yoke 20 (in turn, a size of a rotary electric machine or the like), a plurality of armature cores 10 arranged in the yoke 20 are formed such that the edges of the prism portion 14 and the flanged member 15

2008336853 09 Jun 2010

adjacent to each other are parallel to each other. Alternatively, by giving priority to an angle formed by two edges of one armature core 10, a plurality of armature cores 10 are formed and arranged such that the edges of the prism portion 14 and the flanged member 15 adjacent to each other are parallel to each other.

Parts (a), (b) and (c) of FIG. 3 are views describing an example of punching the magnetic plates 12, which show boundaries between the magnetic plates 12 and molds 102, 103, 104a and 104b to be apart from each other. In the armature core 10, the first rectangular solid portion 16 is formed so as to have a uniform width, whereas the width of the prism portion 14 gradually increases in the lamination direction of the magnetic plates 12. From the viewpoint of forming the magnetic plates 12 through punching, it is desired that for the reason described below, the length WL of the first rectangular solid portion 16 in the first direction be formed to be equal to or smaller than the length WB of the prism portion 14 in the first direction.

First, as shown in part (a) of FIG. 3, in a belt-like magnetic member 120 that is long in the left-right direction of the view, only a part 16p constituting the first rectangular solid portion 16 is punched with the mold 102 such as a punch and a die. The punched magnetic member 120 moves along, for example, an upper direction of the sheet (for example, an open arrow direction of the view), and in the magnetic member 120, a plurality of parts 16p arranged in an extending direction thereof are successively punched. The length WL of the first rectangular solid portion 16 is uniform as described above, and thus a width of the part 16p is uniform at the length WL as well, whereby a width W1 of a recessed portion 101 provided by the mold 102 does not need to be changed and can be fixed. The width W1 is larger than the length WL by twice the clearance for punching. Next, as shown in part (b) of FIG. 3, an upper portion 15pt of a part constituting the flanged member 15 is punched. Note that punching of part (a) of FIG. 3 and punching of part (b) of FIG. 3 may be performed at the same time.

After that, a part 14p constituting the prism portion 14 and a lateral portion 15ps of the part 15p constituting the flanged member 15 are successively punched with the molds 104a and 104b while performing alignment of the molds 104a and 104b respectively with the part 16p in a moving direction of the magnetic member 120, as shown in part (c) of FIG. 3. Note that a side 160 of the part 14p on the part 16p side has been formed with the mold 102.

As described above, the width of the length WB of the prism portion 14 gradually increases along the lamination direction, and thus the width of the part 14b is also required to be punched so as to differ. Specifically, punching is performed with the

2008336853 09 Jun 2010

mold 104a, 104b while changing a width W2 of a portion between the molds 104a and 104b in which the part 14p is punched. The width W2 is larger than the length WB by twice the clearance for punching.

In this case, it is desired that a region punched with the mold 102 and the regions punched with the molds 104a and 104b overlap each other in the direction along the rotation axis Q by a predetermined width (for example, width D1). Specifically, it is desired that the molds 104a and 104b extend in the direction along the rotation axis Q from the part 14p rather than from the side 160. This is because, if that is not the case, it is difficult to reliably punch a boundary region between the part 14p and the part 16p.

In addition, it is desired that a region punched with the mold 103 and the regions punched with the molds 104a and 104b overlap each other by a predetermined width (for example, width D2) in the extending direction (direction perpendicular to the rotation axis Q) of the magnetic member 120. Specifically, it is desired that the mold 103 extend from the part 15p rather than from the lateral portion 15ps or the part 15p that constitutes the flanged member 15 in the extending direction of the magnetic member 120. This is because, if that is not the case, it is difficult to reliably punch corners of the part 15p.

Here, the length WL is equal to or smaller than a minimum value of the length WB, and thus the width W2 between the molds 104a and 104b is inevitably larger than the width W1 of the recessed portion 101 of the mold 102. Accordingly, it is possible to use the molds 104a and 104b extending from the part 14p rather than from the side 160 in the direction along the rotation axis Q. That is, when the molds 104a and 104b adjust only the width W2 in forming the magnetic plates 12, it is possible to successively punch the magnetic plates 12 from the magnetic member 120 without changing the molds 104a and 104b. Such adjustment of the width W2 is easily achieved by adjusting, for example, a relative positional relationship between the molds 104a and 104b in the left-right direction of the sheet (for example, black arrows of the view).

The armature coil 30 is capable of employing a separately prepared air-core coil that is wound around the prism portion 14 as long as the length WL of the first rectangular solid portion 16 in the first direction is formed to be equal to or smaller than the minimum value of the length WB of the prism portion 14 in the first direction. That is, when the prism portion 14 is inserted into an air core portion of the air-core coil from the first rectangular solid portion 16 side, the prism portion 14 functions as a core of the armature coil 30. When the prism portion 14 includes the flanged member 15, an air-core coil is attached from the first rectangular solid portion 16 side toward the prism portion

2008336853 09 Jun 2010

14, and the first rectangular solid portion 16 is buried in the recessed portion 22, whereby the armature coil 30 can be held by the flanged member 15 and the yoke 20.

Effects of First Embodiment

As described above, the armature core 10 includes a plurality of laminated magnetic plates 12, which reduces an eddy current. In addition, the armature 40 for axial gap can be obtained by winding the armature coil 30 around the prism portion 14 and burying the first rectangular solid portion 16 in the recessed portion 22. When the side on which the width of the prism portion 14 is larger is provided on the outer circumference side in providing a plurality of armature cores 10 in the yoke 20, the armature cores 10 occupy the space with efficiency. Moreover, when the first rectangular solid portion 16 is employed as the portion buried in the recessed portion 22, the clearance between the recessed portion 22 of the yoke 20 and the first rectangular solid portion 16 is reduced irrespective of the shape of the prism portion 14, whereby it is possible to reduce a magnetic resistance between the armature core 10 and the yoke 20. In particular, press-fitting or shrink fitting can be employed in burying the first rectangular solid portion 16 in the recessed portion 22.

Further, the length WL of the first rectangular solid portion 16 in the first direction is equal to or smaller than the minimum value of the length WB of the prism portion 14 in the first direction, and thus a separately prepared air-core coil is easily attached to the prim portion 14 from the first rectangular solid portion 16 side. In addition, the magnetic plates 12 are easily punched.

Further, in the armature 40, a plurality of armature cores 10 are circularly arranged with the rotation axis Q being the center on the yoke 20, and the edges of the adjacent prism portions 14 (and flanged members 15) are formed or arranged so as to be parallel to each other. Accordingly, a gap between the armature core 10 and the yoke 20 is reduced while improving a space factor of the armature coil 30, which achieves an increase in fastening strength therebetween as well as a reduction in magnetic resistance therebetween.

Further, a separately prepared air-core coil is attached to the prism portion 14, and thus the armature coil 30 is capable of employing the air-core coil having a large space factor by, for example, performing normal winding and performing winding forming.

2008336853 09 Jun 2010

Further, the yoke 20 is formed by laminating a plurality of magnetic plates 24 in the rotation axis Q direction, which enables the formation of the yoke 20 with electromagnetic steel sheets whose iron loss is small.

Further, the length WL of the first rectangular solid portion 16 in the first direction is equal to or smaller than the length $2\pi r/n$ obtained by dividing $2\pi r$ by n, where $2\pi r$ represents a circumference of a circle whose radius is the length r from the rotation axis Q as the center to the position of the armature core 10 closest to the rotation axis Q, and n represents the number of armature cores 10 buried in the recessed portions 22 of the yoke 20. Accordingly, it is possible to bury the armature cores 10 in the yoke 20 without the respective first rectangular solid portions 16 of the adjacent armature cores 10 interfering with each other.

Second Embodiment

In the first embodiment above, though the description is given of the mode in which only the first rectangular solid portions 16 are buried in the recessed portions 22 provided in the yoke 20, the present invention is not limited thereto. Description is given here of a mode in which a flanged portion 18a is further provided to the end portion of the first rectangular solid portion 16 as a second embodiment of the present invention, with reference to the drawings. Note that unless particularly noted in the following description of the embodiment, the elements having similar functions as those of the first embodiment above are denoted by the same reference symbols and the description thereof is omitted.

FIG. 4 is an exploded perspective view of an armature 40a according to the second embodiment of the present invention, in which one armature core 10a among a plurality of armature cores 10a disposed in a yoke 20a is separated from the yoke 20a, and is shown side by side with an armature coil 30a.

The armature 40a includes the armature cores 10a, the yoke 20a and the armature coils 30a, which is applied to, for example, an axial gap motor (not shown).

Similarly to the armature core 10 described in the first embodiment above, the armature core 10a is formed by laminating a plurality of magnetic plates 12a and includes the prism portion 14, the flanged member 15 and the first rectangular solid portion 16. Further, the armature core 10a includes the flanged portion 18a at the end portion on the side opposite to the prism portion 14 with respect to the first rectangular solid portion 16, where a length WSa of the flanged portion 18a in the first direction is formed to be larger than the length WL of the first rectangular solid portion 16 in the first direction, and a

2008336853 09 Jun 2010

length in the lamination direction thereof is set to be the same as that of the first rectangular solid portion 16. That is, the flanged portion is also a rectangular solid. Note that in order to avoid interference between the adjacent flanged portions 18a, the length WSa of the flanged portion 18a in the first direction is formed to be equal to or smaller than a length $2\pi ra/na$ obtained by dividing $2\pi ra$ by na, where $2\pi ra$ represents a circumference of a circle whose radius is a length ra from the rotation axis Q being the center to a position of the armature core 10a closest to the rotation axis Q, and na represents the number of armature cores 10 buried in recessed portions 22a of the yoke 20a (FIG. 4 shows a mode where na=9 as an example).

Parts (a) and (b) of FIG. 5 are views describing an example of punching the magnetic plates 12a, which show boundaries between the magnetic plates 12a and molds 102a, 103, 104a and 104b to be apart from each other. In the present embodiment, similarly to the first rectangular solid portion 16, the flanged portion 18a is formed to have a uniform width in the lamination direction of the magnetic plates 12a. From the viewpoint of forming the magnetic plates 12a through punching as in the first embodiment above, it is desired that the length WL of the first rectangular solid portion 16 in the first direction be formed to be equal to or smaller than a minimum value of the length WB of the prism portion 14 in the first direction as described above and also be formed to be equal to or smaller than the length WSa of the flanged portion 18a in the first direction.

First, as shown in part (a) of FIG. 5, in the belt-like magnetic member 120 that is long in the left-right direction of the view, the part 16p constituting the first rectangular solid portion 16, a part 18ap constituting the flanged portion 18a, and the upper portion 15pt of the part constituting the flanged member 15 are punched with the molds 102a and 103 such as a punch and a die. The punched magnetic member 120 moves along, for example, an upper direction of the sheet (for example, an open arrow direction of the view), and in the magnetic member 120, a plurality of parts 16p arranged in an extending direction thereof are successively punched. The length WL of the first rectangular solid portion 16 and the length WSa of the flanged portion 18a are uniform as described above, and thus a width of the part 16p and a width of the part 18ap are uniform to be WL and WSa, respectively. Therefore, widths W1a and W3a of the recessed portion 101a provided by the mold 102a do not need to be changed and can be fixed. The width W1a is larger than the length WL by twice the clearance for punching, whereas the width W3a is larger than the length WSa by twice the clearance for punching.

2008336853 09 Jun 2010

After that, as shown in part (b) of FIG. 5, the part 14p constituting the prism portion 14 and the lateral portion 15ps of the part 15p constituting the flanged member 15 are successively punched with the molds 104a and 104b while performing alignment of the molds 104a 104b individually with respect to the parts 16p and 18ap in the moving direction of the magnetic member 120. In this case, as in the first embodiment above, the side 160 of the part 14p on the part 16p side has been formed with the mold 102a.

In this case, it is desired that the region punched with the mold 102a and the region punched with the mold 104a overlap each other by a predetermined width D3 in the direction along the rotation axis Q. Specifically, it is desired that the molds 104a and 104b extend from the part 14p rather than from the side 160 in the direction along the rotation axis Q. This is because, if that is not the case, it is difficult to reliably punch the boundary region 19 between the part 14p and the part 16p.

Further, it is desired that the region punched with the mold 103 and the regions punched with the molds 104a and 104b overlap each other by a predetermined width D4 in the extending direction (direction perpendicular to the rotation axis Q) of the magnetic member 120. Specifically, it is desired that the mold 103 extend from the part 15p rather than from the lateral portion 15ps of the part 15p constituting the flanged member 15 in the extending direction of the magnetic member 120. This is because, if that is not the case, it is difficult to reliably punch the corners of the part 15p.

FIG. 6 is a partially enlarged view of the armature 40a, which shows a region corresponding to a region P1 of the armature 40a shown in FIG. 4. For example, one obtained by pressure-forming iron powders is applied to the yoke 20a, and the yoke 20a includes the recessed portions 22a in which the first rectangular solid portions 16 and the flanged portions 18a are buried. In the yoke 20a, the recessed portion 22a is also open toward an outer side in the radial direction with the rotation axis Q being the center and is not open toward an inner side. That is, part of the cross-sectional shape of the recessed portion 22a in the radial direction shows substantially the same shape as the mold 102a shown in FIG. 5, into which the first rectangular solid portion 16 and the flanged portion 18a of the armature core 10a can be inserted along the recessed portion 22a from the outer side in the radial direction.

Modification of Second Embodiment

FIG. 7 is a partially enlarged view of the armature 40a according to a modification, which shows a region corresponding to a region P2 of the armature 40a shown in FIG. 4. As shown in FIG. 6, it is desired that the yoke 20a hold the end surface

2008336853 09 Jun 2010

of the flanged portion 18a on the side opposite to the first rectangular solid portion 16 to hold the armature core 10a from the viewpoint of securing the strength of the armature 40a. However, in a case where the recessed portion 22a of the yoke 20a can hold the portion in the vicinity of the boundary between the prism portion 14 and the first rectangular solid portion 16 with a sufficient strength, as shown in FIG. 7, the end surface of the flanged portion 18a on the side opposite to the first rectangular solid portion 16 may be exposed.

(Effects of Second Embodiment)

As described above, the armature core 10a further includes the flanged portion 18a at the end portion of the first rectangular solid portion 16 on the side opposite to the prism portion 14, and the length WSa of the flanged portion 18a in the first direction is smaller than the length WL of the first rectangular solid portion 16 in the first direction. Accordingly, even when the armature core 10a is attracted from the prism portion 14 side, it is possible to prevent or suppress the armature core 10a from becoming detached from the yoke 20a.

Further, when the yoke 20a is formed by powder compacting, the natural frequency is higher compared with the case where the yoke 20a is formed of electromagnetic steel plates, which increases vibration resistance. In particular, the flow of the magnetic flux toward the side (bottom of the yoke) opposite to the side of the yoke 20a on which the armature cores 10a are buried becomes smooth.

Further, the yoke 20a includes the recessed portions 22a in which the first rectangular solid portions 16 are buried, and in the yoke 20a, the recessed portion 22a is also open toward the outer side in the radial direction with the rotation axis Q being the center. Accordingly, the entire first rectangular solid portion 16 can be inserted from the outer side in the radial direction, which makes it easy to bury the armature core 10a in the recessed portion 22a.

Third Embodiment

Although the descriptions in the first and second embodiments above are given of the mode in which the width of the first rectangular solid portion 16 is equal to or smaller than the minimum value of the width of the prism portion 14, and in particular, the description in the second embodiment is given of the mode in which the flanged portion 18a is provided to the lower side of the first rectangular solid portion 16, the present invention is not limited thereto. The width of the first rectangular solid portion 16

2008336853 09 Jun 2010

may be larger than the minimum value of the width of the prism portion 14. Description is given here, as a third embodiment of the present invention, of a mode in which a width of a first rectangular solid portion 16c is equal to or larger than the maximum value of the width of the prism portion 14, with reference to the drawings.

FIG. 8 is an exploded perspective view of an armature 40c according to the third embodiment of the present invention, which shows the armature 40c disassembled in the direction along the rotation axis Q. FIG. 9 is an assembly view of the armature 40c.

The armature 40c includes armature cores 10c and a yoke 20c, and is applied to, for example, an axial gap motor (not shown).

The armature core 10c is formed by laminating a plurality of magnetic plates 12 similarly to the armature core 10 described in the first embodiment above and includes the prism portion 14, the flanged member 15 and the first rectangular solid portion 16c, where the length WL of the first rectangular solid portion 16c in the first direction is formed to be larger than a maximum value of the length WB of the prism portion 14 in the first direction. Specifically, a length WLc of the first rectangular solid portion 16c in the first direction is substantially equal to a length $2\pi rc/nc$ obtained by dividing $2\pi rc$ by nc, where $2\pi rc$ represents a circumference of a circle whose radius is a length rc from the rotation axis Q being the center to a position of the armature core 10c closest to the rotation axis Q, and nc represents the number of armature cores 10c buried in the recessed portions 22c of the yoke 20c (FIG. 8 shows a mode in which nc=12 as an example). In addition, an armature coil 30c is series-wound around the prism portion 14 of the armature core 10c.

The yoke 20c is formed by laminating a plurality of magnetic plates 24c in the rotation axis Q direction and includes recessed portions 22c in which the first rectangular solid portions 16c are buried, where the recessed portion 22c is open also toward a part 23c on an inner side of the yoke 20c in the radial direction with the rotation axis Q being the center. Further, the yoke 20c is short-circuited on the outer side than the armature cores 10c in the radial direction and on the side (lower side of the view) opposite to the side on which the armature cores 10c are buried in the yoke 20c. That is, the recessed portions 22c in which the first rectangular solid portions 16c of the armature cores 10c can be buried are formed on a main surface on one side of the surface on which the yoke 20c extends, whereas the recessed portions 22c are not formed on a main surface on the other side. Further, the yoke 20c is short-circuited on the outer side than the armature cores 10c in the radial direction, and thus the armature cores 10c can be held by securing an inner circumference thereof by any means.

2008336853 09 Jun 2010

Further, in the present embodiment, the first rectangular solid portion 16c has a larger area in the surface on which the yoke 20c extends than the prism portion 14, and thus as described in the second embodiment and its modification above, the armature core 10c cannot be held in the vicinity of the boundary between the prism portion 14 and the first rectangular solid portion 16c (side 160 of FIG. 5). Therefore, the yoke 20c is capable of holding the armature cores 10c when the side opposite to the side on which the armature cores 10c are buried is short-circuited.

Parts (a) and (b) of FIG. 10 are views describing an example of punching the magnetic plates 12c, which show boundaries between the magnetic plates 12c and molds 102b, 103, 104a and 104b to be separated from each other. In the armature core 10c, the first rectangular solid portion 16 is formed to have a uniform width in the lamination direction of the magnetic plates 12c, where the length WLc of the width is formed so as to be equal to or larger than the maximum value of the length WB of the prism portion 14 in the first direction.

First, as shown in part (a) of FIG. 10, in the belt-like magnetic member 120 extending in a vertical direction with the left-right direction of the view being the width direction, part of a part 16cp constituting the first rectangular solid portion 16c and the upper portion 15pt of the part 15p constituting the flanged member 15 are punched with the molds 102c and 103. Specifically, a side 180 of the part 16cp on the prism portion 14 side has yet to be formed. The punched magnetic member 120 moves along, for example, an upper direction of the sheet (for example, open arrow direction of the view), and in the magnetic member 120, a plurality of parts 16cp arranged in the extending direction thereof are punched successively. The length WLc of the first rectangular solid portion 16c is uniform as described above, and thus the width of the part 16cp is also uniform to be the length WLc. Accordingly, a width W1c of a recessed portion 101c provided by the mold 102c does not need to be changed and can be fixed. The width W1c is larger than the length WLc by twice the clearance for punching.

After that, the part 14p constituting the prism portion 14 and the lateral portion 15ps of the part 15p constituting the flanged member 15 are successively punched with the molds 104a and 104b while performing alignment of the molds 104a and 104b individually with respect to the part 16cp and the upper portion 15pt in the moving direction of the magnetic member 120. Part of the part 16cp is punched as well when the part 14p is punched, to thereby punch the side 180 that has not been punched in the preceding step.

2008336853 09 Jun 2010

In this case, it is desired that the region punched with the mold 102c and the regions punched with the molds 104a and 104b overlap each other by a predetermined width D5 in the direction along the rotation axis Q. Specifically, it is desired that the mold 102c extend from the part 16cp rather than from the side 180 in the direction along the rotation axis Q. This is because, if that is not the case, it is difficult to reliably punch a boundary region 19c between the part 16cp and the part 14p.

Further, it is desired that the region punched with the mold 103 and the regions punched with the molds 104a and 104b overlap each other by a predetermined width D6 in the extending direction (direction perpendicular to the rotation axis Q) of the magnetic member 120. Specifically, it is desired that the mold 103 extend from the part 15p rather than from the lateral portion 15ps of the part 15p constituting the flanged member 15 in the extending direction of the magnetic member 120. This is because, if that is not the case, it is difficult to reliably punch corners of the part 15p.

Next, a thickness of the entire yoke 20c in the rotation axis Q direction and a depth of the recessed portion 22c are discussed. In order that the yoke 20c holds the armature cores 10c in the rotation axis Q direction, the yoke 20c in which the armature cores 10c are disposed may bend if a difference between the thickness of the entire yoke 20c and the depth of the recessed portion 22c is substantially equal to, for example, the thickness of the magnetic plate 24c, which indicates an insufficient difference between the thickness of the entire yoke 20c and the depth of the recessed portion 22c. Accordingly, on the side opposite to the side on which the armature cores 10c are buried, the yoke 20c may further include a bottom 26c formed of non-magnetic metal (for example, such as aluminum and brass) that has a larger thickness in the rotation axis Q direction compared with the magnetic member 24c. Accordingly, the rigidity of the yoke 20c is increased, which makes it possible to reliably hold the armature cores 10c.

Effects of Third Embodiment

As described above, the length WLc of the first rectangular solid portion 16c in the first direction is larger than the maximum value of the length WB of the prism portion 14 in the first direction, whereby the magnetic resistance between the armature core 10c and the yoke 20c is small. In addition, the magnetic plate 12 is punched with ease.

Further, the armature coil 30c is series-wound around the prism portion 14, and thus the armature coil 30c is firmly bonded to the armature core 10c, which avoids or suppresses winding collapse.

2008336853 09 Jun 2010

Further, the recessed portion 22c is open also toward the inner side of the yoke 20c in the radial direction, and thus the first rectangular solid portion 16c can be inserted from the inner side in the radial direction, which makes is easy to bury the armature core 10c in the recessed portion 22c. In addition, compared with the mode in which the recessed portion is open toward the outer side in the radial direction, which is described in the second embodiment above, this is advantageous in that the armature core 10c is hard to become detached from the recessed portion 22c by securing the inner circumference by any means.

Further, the length WLc of the first rectangular solid portion 16c in the first direction is substantially equal to the length $2\pi rc/nc$ obtained by dividing $2\pi rc$ by nc, where $2\pi rc$ represents the circumference of a circle whose radius is the length rc from the rotation axis Q as the center to a position of the armature core 10 closest to the rotation axis Q, and nc represents the number of armature cores 10c buried in the recessed portions 22c of the yoke 20c. Accordingly, one first rectangular solid portion 16c does not interfere with the other first rectangular solid portion 16c, and a large amount of magnetic flux linkage is obtained by effectively using the space capable of being occupied.

Further, the yoke 20c is short-circuited on the outer side than the armature cores 10c in the radial direction and the side opposite to the side on which the armature cores 10c are buried in the yoke 20c, whereby the short-circuited part on the outer side of the yoke 20c in the radial direction can suppress the armature cores 10c from becoming detached or moving even when the centrifugal force is exerted on the armature cores 10c due to rotation.

Further, the yoke 20c can reliably hold the armature cores 10c as long as the bottom 26c is provided on the side opposite to the side on which the armature cores 10c are buried.

Here, when both of the bottom 26c and the magnetic plate 24c are formed of thin plates laminated in the rotation axis Q direction, and when the thickness of the thin plates constituting the bottom 26c in the rotation axis Q direction is larger than the thickness of the thin plates constituting one magnetic plate 24c in the rotation axis Q direction, the rigidity of the yoke 20c is increased, and the armature cores 10c can be held more reliably. In addition, it is possible to increase the strength of the bottom 26c that is preferably used for securing the strength while reducing iron loss in the magnetic plate 24c that is preferably used for a magnetic path.

2008336853 09 Jun 2010

Further, when the bottom 26c is formed of non-magnetic metal, an eddy current can be reduced even if the thickness in the rotation axis Q direction is large.

Fourth Embodiment

The description is mainly given of the armature cores 10, 10a and 10c in the first to third embodiments above, where a magnetic resistance of the armature employing the above-mentioned armature cores 10, 10a or 10c can be reduced as follows. Description is given here, as a fourth embodiment of the present invention, of a mode in which an elastic member is provided between an armature core and a yoke with reference to the drawings.

FIG. 11 is a plan view showing, as an example, part of a yoke 20d employed in the armature according to the fourth embodiment of the present invention, which shows a part corresponding to a part indicated by A-O-B of FIG. 1 in bird's eye view from the rotation axis Q direction. In addition, FIG. 12 is an enlarged perspective view showing part of a recessed portion 22d.

The yoke 20d is formed by laminating a plurality of circular second magnetic plates 24d with the rotation axis Q being the center in the lamination direction and has a main surface with the rotation axis Q direction being a normal, and each second magnetic plate 24d appropriately includes a hole 23d. A plurality of second magnetic plates 24d including the hole 23d are laminated in the rotation axis Q direction, whereby the yoke 20d has a plurality of recessed portions 22d in which a plurality of armature cores 10d (described below with reference to FIGS. 14A and 14B) are circularly disposed around the rotation axis Q.

A second magnetic plate 24t among the second magnetic plates 24d constituting the yoke 20d that is positioned on the side closest to the armature core 10d includes a projection 32d projecting from an edge on the outer side of the recessed portion 22d in the radial direction toward the inner side in the radial direction. It is desired that a length L1 of the projection 32d projecting from the edge of the recessed portion 22d be smaller than a depth L0 of the recessed portion 22d. Taking a concrete example, in a case where the recessed portion 22d is defined by, for example, four second magnetic plates 24d and the second magnetic plate 24t including the projection 32d, by five second magnetic plates 24d and 24t in total, the length L1 of the projection 32d is smaller than the depth L0 in a case of laminating five second magnetic members 24d and 24t in total. Moreover, it is desired that the length L1 of the projection 32d be smaller than a depth L2 of the recessed portion 22d excluding the second magnetic plate 24t. When the above-mentioned conditions of depth are satisfied, the second magnetic plate 24t in which the projection

2008336853 09 Jun 2010

32d is provided is not required to be one positioned on the side closest to the armature core 10d.

Further, among the second magnetic plates 24d and 24t that define the recessed portion 22d, the second magnetic plates 24d excluding the second magnetic plate 24t including the projection 32d have notches 34d in which the projections 32 are accommodated at positions corresponding to the projections 32d. Note an edge 24e on the outer side in the radial direction of the second magnetic plate 24d that defines the notches 34d is desired to project toward an inner side in the radial direction than a base 32b of the projection 32d. In other words, it is desired that the base 32b of the projection 32d be positioned on the outer side in the radial direction than the edges on the outer side in the radial direction of the second magnetic plates 24d excluding the second magnetic plate 24t. The reason for this is that stress concentration in the base 32b when the projection 32d bends sharply is avoided or suppressed, and the sharply bent projection 32d is accommodated in the notch 34d, thereby suppressing the stress concentration.

FIG. 13 is an enlarged cross-sectional view of part of the armature core 10d buried in the recessed portion 22d. The second magnetic plate 24t including the projection 32d has elasticity. The projection 32d is bent sharply when the armature core 10d is inserted into the recessed portion 22d, which functions as an elastic member 32 that urges the armature core 10d toward the rotation axis Q. In a case where the second magnetic plates 24d constituting the yoke 20d are punched to be molded, the elastic member 32 is manufactured with ease by changing shapes of the holes 23. That is, punching may be performed by replacing the mold for punching the projection 32d and the mold for punching the notch 34d with each other.

In a case where the armature core 10d is buried in the recessed portion 22d by making the length L1 of the projection 32d smaller than the depth L0 of the recessed portion 22d, it is possible to prevent the projection 32d from being sandwiched between the main surface of the yoke 20d and the bottom surface of the armature core 10d.

Further, the notch 34d accommodating the sharply bent projection 32d is provided, whereby it is possible to reduce a gap between the armature core 10d and the recessed portion 22d by a thickness of the projection 32d, that is, by a thickness of the second magnetic plate 24t.

In particular, the first magnetic plates 12 laminated in the radial direction constitute the armature core 10d, and hence a tolerance in the lamination direction is a total sum of plate thickness tolerances of one first magnetic plate 12. For this reason, the tolerance is large in the length in the radial direction than the length in the direction

2008336853 09 Jun 2010

perpendicular to the radial direction. However, control of the shape of the recessed portion 22d in consideration of the tolerance complicates the steps or incurs a cost increase. Accordingly, rattling inevitably occurs in the radial direction. The projection 32d absorbs this rattling, and prevents or suppresses the armature core 10d from becoming detached in the recessed portion 22d.

FIGS. 14A and 14B are views showing the armature core 10d, where FIG. 14A is a perspective view of the armature core 10d and FIG. 14B is a plan view which is viewed from the rotation axis Q direction in bird's eye view. In a case of aiming to reduce a magnetic resistance or suppressing rattling, it is desired that the armature core 10d shown in FIGS. 14A and 14B be employed in place of the armature core 10 shown in FIG. 1.

That is, as shown in FIG. 14B, there is provided, on the inner side of a first rectangular solid portion 16d in the radial direction, a column portion 15d whose length WL in the first direction decreases along the radial direction when the armature core 10d is buried in the yoke 20d. The edge in the circumferential direction, which is defined by successively decreasing the lengths WL of the second magnetic plates 24d in the first direction, has an isosceles trapezoid shape with the radial direction being the center, and a longer side of two parallel sides of the isosceles trapezoid coincides with the length WL of the first rectangular solid portion 16d in the first direction. In addition, a shorter side of the two sides is perpendicular to the radial direction on the inner side in the radial direction.

By forming the edge in the circumferential direction and the edge of the recessed portion 22d corresponding thereto so as to be parallel to each other, the air gap between the armature core 10d and the yoke 20d can be reduced in a case where the projection 32d is urged from the outer side in the radial direction toward the inner side in the radial direction.

Modification of Fourth Embodiment

FIG. 15 is a perspective view showing a modification of the armature core 10d. FIGS. 16A and 16B are cross-sectional views showing a state in which the armature core 10d or 10e are buried in a recessed portion 22e, which show a surface defined by the rotation axis Q direction and the radial direction. The elastic member 32 is not necessarily required to be provided in the yoke 20d, and may be provided on the armature core 10d side. Taking a concrete example, as shown in FIG. 16A, part of the first rectangular solid portion 16d of a first magnetic plate 12u constituting the outermost side in the radial direction in the armature core 10d is cut in a U-shape, and a region

2008336853 09 Jun 2010

surrounded by the U-shape is lifted from a surface on which the first magnetic plate 12d extends by an angle θ1 (0°<θ1<90°), thereby forming a projection 32e. Note that as shown in FIG 16B, the region surrounded by the U-shape may be lifted by an angle θ2 (90°<θ2<180°), thereby forming a projection 32f.

FIG. 17 is a plan view showing part of an armature 40e according to a further modification of the fourth embodiment as an example. The mode in which the first rectangular solid portion 16d and a second rectangular solid portion 17d having a small length WL in the first direction on the rotation axis Q side than the first rectangular solid portion 16d are provided may suffice, not limited to the mode in which the first rectangular solid portion 16d and the column portion 15d are provided as shown in FIG. 11, FIGS. 14A and 14B. Specifically, the first rectangular solid portion 16d extending in the circumferential direction in plan view from the rotation axis Q direction and the second rectangular solid portion 17d extending in the radial direction show a substantially T-shape, and the second rectangular solid portion 17d extends from substantially the center of the first rectangular solid portion 16d toward the inner side in the radial direction.

A recessed portion 22f also has a shape corresponding to the first rectangular solid portion 16d and the second rectangular solid portion 17d. That is, the recessed portion 22f shows substantially a T-shape by the part extending in the column direction (hereinafter, "circumferential direction part") and the part extending in the radial direction (hereinafter, "radial direction part"), and the radial direction part extends from substantially the center of the circumferential direction part toward the inner side in the radial direction. Further, the length of the radial direction part in the radial direction is made to be larger than the length of the second rectangular solid portion 17d in the radial direction.

With the configuration as described above, in the case where the armature core 10f is buried in the recessed portion 22e, the armature core 10f is urged toward the rotation axis Q by an elastic force of the projection 32d, whereby a surface 16S on the inner side of the first rectangular solid portion 16d in the radial direction is brought into intimate contact with the recessed portion 22e. Accordingly, the magnetic flux flowing through the armature core 10e flows via the first rectangular solid portion 16d and the second solid rectangular portion 17d in the circumferential direction without being impaired by an air gap.

2008336853 09 Jun 2010

Application to rotary electric machine

FIG. 18 is an exploded perspective view showing a rotary electric machine 60 according to the present invention as an example, which shows the rotary electric machine 60 disassembled in the direction along the rotation axis Q. The rotary electric machine 60 includes the armature (stator) 40 and a field element (rotor) 50, and the armature cores 10 provided in the armature 40 and the field element 50 are opposed to each other in the rotation axis Q direction through a predetermined air gap. Note that though FIG. 18 shows, as an example, the rotary electric machine 60 including the armature 40 described in the first embodiment above, the rotary electric machine may include the armature 40a or 40c described in the second or third embodiment above.

The field element 50 includes magnets 52 that generate a magnetic field flux and a yoke 54 that holds the magnets 52. Although FIG. 18 shows a mode in which eight magnets 52 are provided as an example, appropriate modification may be made depending on, for example, the ability required for the rotary electric machine 60.

The magnets 52 are circularly disposed around the rotation axis Q, and the yoke 54 is provided with a hole 56 for causing a rotation shaft (not shown) to penetrate therethrough around the rotation axis Q. Note that in actuality, the magnets 52 and the yoke 54 are provided in a close contact manner.

Effects in a case of application to rotary electric machine

As described above, the rotary electric machine 60 is formed by arranging the field element 50 so as to be opposed to the armature 40 described in the first or third embodiment above along the rotation axis Q direction, whereby an output of the rotary electric machine 60 is increased.

Further, the field element 50 includes the magnets 52 that generate a magnetic field flux, and thus the magnetic flux flowing through the armature core 10 includes a large number of harmonics, and the flux density increases. However, the effect of reducing iron loss in the armature core 10 is large, whereby torque can be generated with high efficiency.

Application to compressor

FIG. 19 is a cross-sectional view showing a high-pressure dome-type compressor 70 in which the axial gap motor 60 is mounted. The rotary electric machine 60 described above can be mounted in, for example, the compressor 70. Note that as to the axial gap motor 60, not a cross section but a lateral surface is shown.

2008336853 09 Jun 2010

This compressor 70 includes a hermetic container 72, a compression mechanism portion 74 and the axial gap motor 60. The compression mechanism portion 74 is disposed in the hermetic container 72. The axial gap motor 60 is disposed in the hermetic container 72 and on an upper side of the compression mechanism portion 74. The compression mechanism portion 74 is driven by the axial gap motor 60 via a rotation shaft 76. Here, the above-mentioned armature 40 and field element 50 function as a stator and a rotor, respectively.

A suction pipe 78 is connected to a lateral side of the hermetic container 72 on a lower side, while a discharge pipe 80 is connected to an upper side of the hermetic container 72. A refrigerant gas supplied from the suction pipe 78 is guided to an intake side of the compression mechanism portion 74. An outer circumference side of the yoke 20 is fixed to an inner side of the hermetic container 72, to thereby fix the axial gap motor 60. In addition, a lower end side of the rotation shaft 76 is coupled to the compression mechanism portion 74.

The compression mechanism portion 74 includes a cylinder-shaped main body 82, an upper end plate 84 and a lower end plate 86. The upper end plate 84 and the lower end plate 86 are mounted onto an upper opening end and a lower opening end of the main body 82, respectively. The rotation shaft 76 penetrates through the upper end plate 84 and the lower end plate 86, and is inserted into the main body 82.

The rotation shaft 76 is rotatably supported by a bearing 88 provided to the upper end plate 84 of the compression mechanism portion 74 and a bearing 90 provided to the lower end plate 86 of the compression mechanism portion 74. A crank pin 92 is provided to the rotation shaft 76 within the main body 82. A piston 94 is fitted with the crank pin 92 to be driven. In a compression chamber 96 formed between the piston 94 and a cylinder corresponding thereto, the refrigerant gas is compressed. The piston 94 rotates in a state of being decentered or revolves, to thereby change a volume of the compression chamber 96.

The compression mechanism portion 74 is driven when the axial gap motor 60 rotates, whereby the refrigerant gas is supplied from the suction pipe 78 to the compression mechanism portion 74. As a result, the refrigerant gas is compressed by the compression mechanism portion 74 (in particular, compression chamber 96). The high-pressure refrigerant gas compressed by the compression mechanism portion 74 is discharged from a discharge port 98 of the compression mechanism portion 74 to an inner side of the hermetic container 72. Further, the high-pressure refrigerant gas passes through, for example, a groove (not shown) provided around the rotation shaft 76, a hole

2008336853 09 Jun 2010

(not shown) penetrating through the inner side of the armature 40 (stator) and the inner side of the field element 50 in the rotation axis Q direction, and the space between outer circumference portions of the armature 40 and the field element 50 and the inner surface of the hermetic container 72 to be transmitted to the space of the upper portion of the axial gap motor 60. After that, the high-pressure refrigerant gas is discharged to an outside of the hermetic container 72 via the discharge pipe 80.

Effect in a case of application to compressor

As described above, the axial gap motor 60 described above is small in size and achieves high torque, which causes small loss in compressing a refrigerant.

While the invention has been shown and described in detail, the foregoing description is in all aspects illustrative and not restrictive. It is therefore understood that numerous modifications and variations can be devised without departing from the scope of the invention.

2008336853 11 Oct 2012

The claims defining the invention are as follows:

1. An armature comprising:

a plurality of armature cores; and

a yoke,

wherein:

each of the armature cores is formed by laminating a plurality of first magnetic plates and comprises:

a prism portion having a length in a first direction perpendicular to a lamination direction in which said first magnetic plates are laminated and a height in a second direction perpendicular to said lamination direction and said first direction, the length gradually increasing a width in all or part in the lamination direction; and

a first rectangular solid portion being adjacent to said prism portion in said second direction and having a uniform length in said first direction,

wherein the prism portion and the rectangular solid portion are lamination of integrally punched magnetic plates;

the yoke includes a recessed portion in which said first rectangular solid portion is buried;

the plurality of armature cores are circularly arranged, on said yoke, with a rotation axis parallel to said second direction as a center; and

edges of said prism portions of adjacent ones of said plurality of armature cores are formed or arranged so as to be parallel to each other, the edges being opposed to each other.

2. The armature according to Claim 1, each of the armature cores further comprising a column portion being adjacent to said prism portion in said second direction, being adjacent to said first rectangular solid portion in said lamination direction, and having a length in said first direction decreasing, along said lamination direction, from a length of said first rectangular solid portion in said first direction.

3. The armature according to Claim 1, wherein the length of said first rectangular solid portion in said first direction is equal to or smaller than a minimum value of the length of said prism portion in said first direction.

4. The armature according to Claim 1 or 2, wherein a length of said first rectangular solid portion in said first direction is larger than a maximum value of the length of said prism portion in said first direction.

2008336853 11 Oct 2012

5. The armature according to any one of Claims 1 to 4, each of the armature cores further comprising a flanged portion at an end portion of said first rectangular solid portion on a side opposite to said prism portion,

wherein a length of said flanged portion in said first direction is larger than the length of said first rectangular solid portion in said first direction.

6. The armature according to any one of Claims 1 or 3 to 5, further comprising:

an armature coil wound around said prism portion.

7. The armature according to Claim 6, further comprising an elastic member urging said first rectangular solid portion buried in said recessed portion in a radial direction with said rotation axis being a center.

8. The armature according to Claim 2, further comprising:

an armature coil wound around said prism portion; and

an elastic member urging said armature core in said decreasing direction,

wherein said first rectangular solid portion and said column portion are buried in the recessed portion of the yoke.

9. The armature according to Claim 6 or 7, wherein:

each of the armature cores further includes, on a side closer to said rotation axis than said first rectangular solid portion, a second rectangular solid portion having the length in said first direction smaller than that of said first rectangular solid portion; and

a length of said recessed portion fitted with said second rectangular solid portion in said lamination direction is larger than a length of said second rectangular solid portion in said lamination direction.

10. The armature according to any one of Claims 7 to 9, wherein said first magnetic plate having an end portion in said lamination direction among said first magnetic plates includes said elastic member.

11. The armature according to Claim 10, wherein said elastic member includes a projection projecting, at the end portion in said lamination direction, from said first magnetic plate toward said recessed portion.

12. The armature according to Claim 3, further comprising:

an armature coil including a separately prepared air-core coil attached to said prism portion.

13. The armature according to any one of Claims 1 to 5, further comprising:

an armature coil series-wounded around said prism portion directly or via an insulator.

14. The armature according to any one of Claims 6 to 13, wherein said yoke is formed by laminating a plurality of second magnetic plates in said rotation axis direction.

2008336853 11 Oct 2012

15. The armature according to any one of Claims 7 to 9, wherein:

said yoke is formed by laminating a plurality of second magnetic plates in said rotation axis direction; and

at least one of said plurality of second magnetic plates includes a projection projecting from an edge of said recessed portion toward said recessed portion.

16. The armature according to Claim 15, wherein a length of said projection from the edge of said recessed portion is smaller than a depth of said recessed portion.

17. The armature according to Claim 15 or 16, wherein said second magnetic plate on one side in said rotation axis direction with respect to said second magnetic plate including said projection among said second magnetic plates includes a notch accommodating said projection at a position corresponding to said projection.

18. The armature according to any one of Claims 6 to 8, wherein said yoke is formed by powder compacting.

19. The armature according to any one of Claims 6 to 18, wherein:

said recessed portion of the yoke is open also toward an outer side in said radial direction with said rotation axis being a center.

20. The armature according to any one of Claims 6 to 18, wherein:

said recessed portion of the yoke is open also toward an inner side in said radial direction with said rotation axis being a center.

21. The armature according to any one of Claims 6 to 18, wherein a length of said first rectangular solid portion in said first direction is equal to or smaller than a length obtained by dividing a circumference of a circle by the number of said armature cores buried in said recessed portions of said yoke, where the circle having, as a radius, a length from said rotation axis being a center to a position of said armature core closest to said rotation axis.

22. The armature according to Claim 21, wherein the length of said first rectangular solid portion in said first direction is substantially equal to the length obtained by dividing the circumference of a circle by the number of said armature cores buried in said recessed portions of said yoke, where the circle having, as a radius, the length from said rotation axis being the center to the position of said armature core closest to said rotation axis.

23. The armature according to Claim 22, wherein said yoke is short-circuited on an outer side in said radial direction than said armature core and on a side opposite to a side on which said armature cores are buried in said yoke.

24. The armature according to any one of Claims 6 to 23, wherein said yoke further includes a bottom on a side opposite to a side on which said armature cores are buried.

2008336853 11 Oct 2012

25. The armature according to Claim 24, wherein:

said bottom and said second magnetic plates are composed of thin plates laminated in said rotation axis direction; and

a thickness of the thin plate constituting said bottom in said rotation axis direction is larger than a thickness of the thin plate constituting one of said second magnetic plates in said rotation axis direction.

26. The armature according to Claim 25, wherein said bottom is formed of non-magnetic metal.

27. A rotary electric machine, comprising:

the armature according to any one of Claims 6 to 26; and

a field element disposed so as to be opposed to said armature core along said rotation axis.

28. The rotary electric machine according to Claim 27, wherein said field element includes a magnet generating a magnetic field flux.

29. A compressor, in which the rotary electric machine according to Claim 27 or 28 is mounted.

Dated 11 October 2012

Daikin Industries, Ltd.

Patent Attorneys for the Applicant/Nominated Person

SPRUSON & FERGUSON

F I G . 1

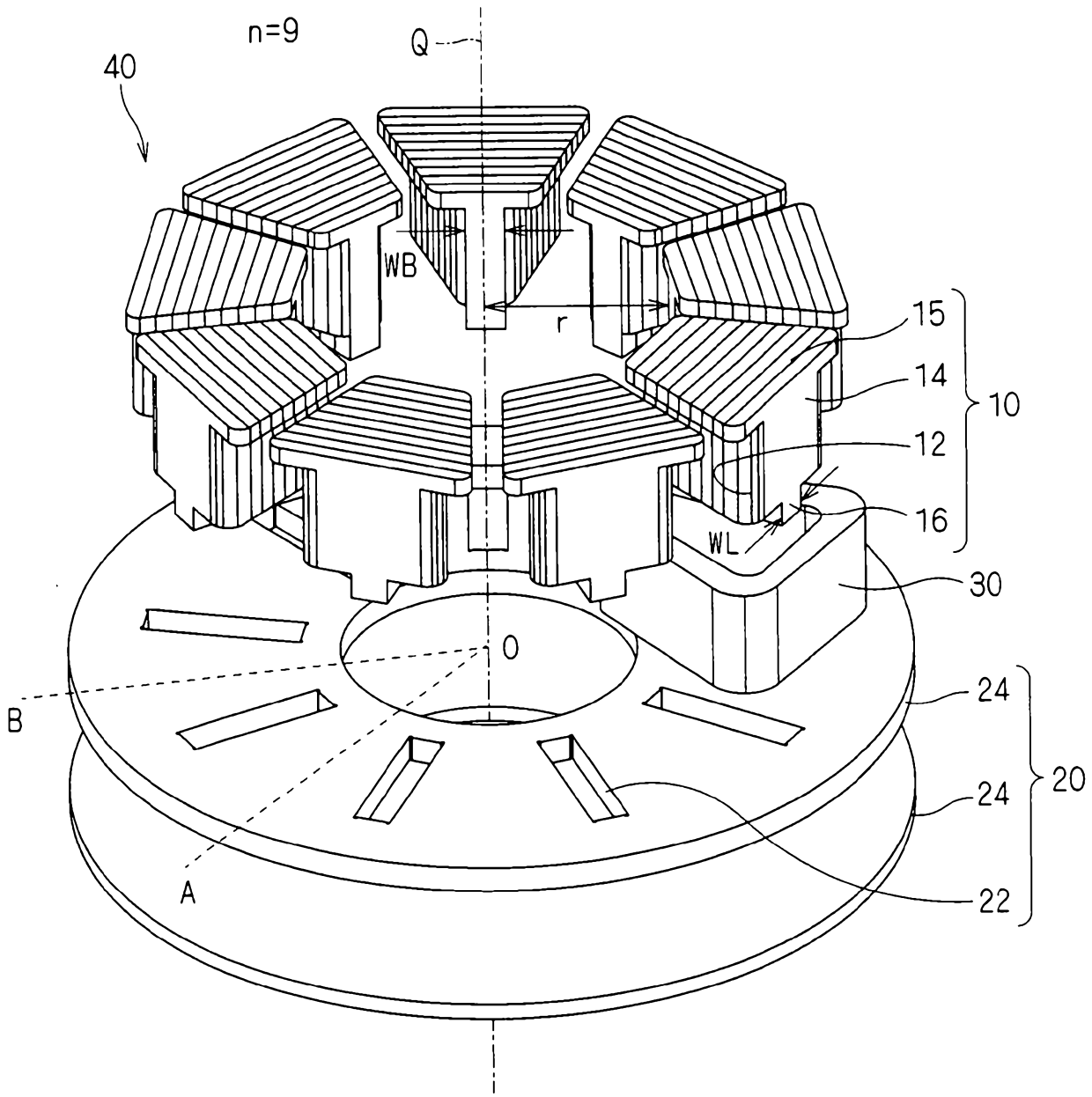

2008336853 09 Jun 2010

FIG. 2

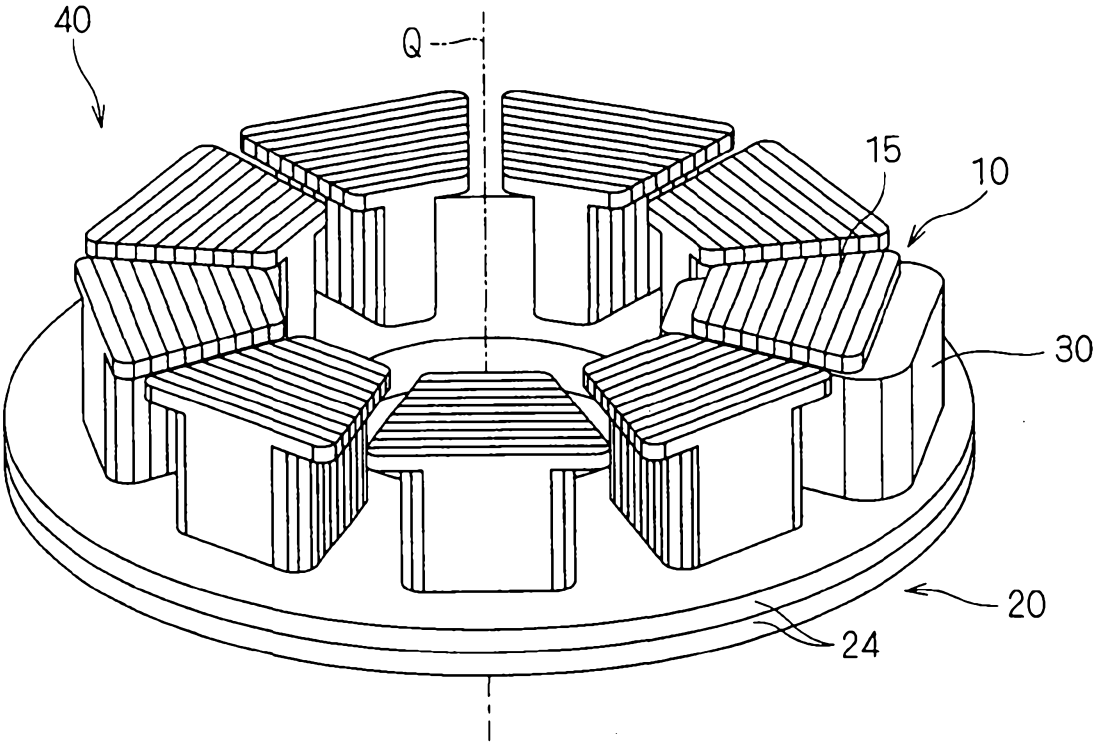

F I G . 3

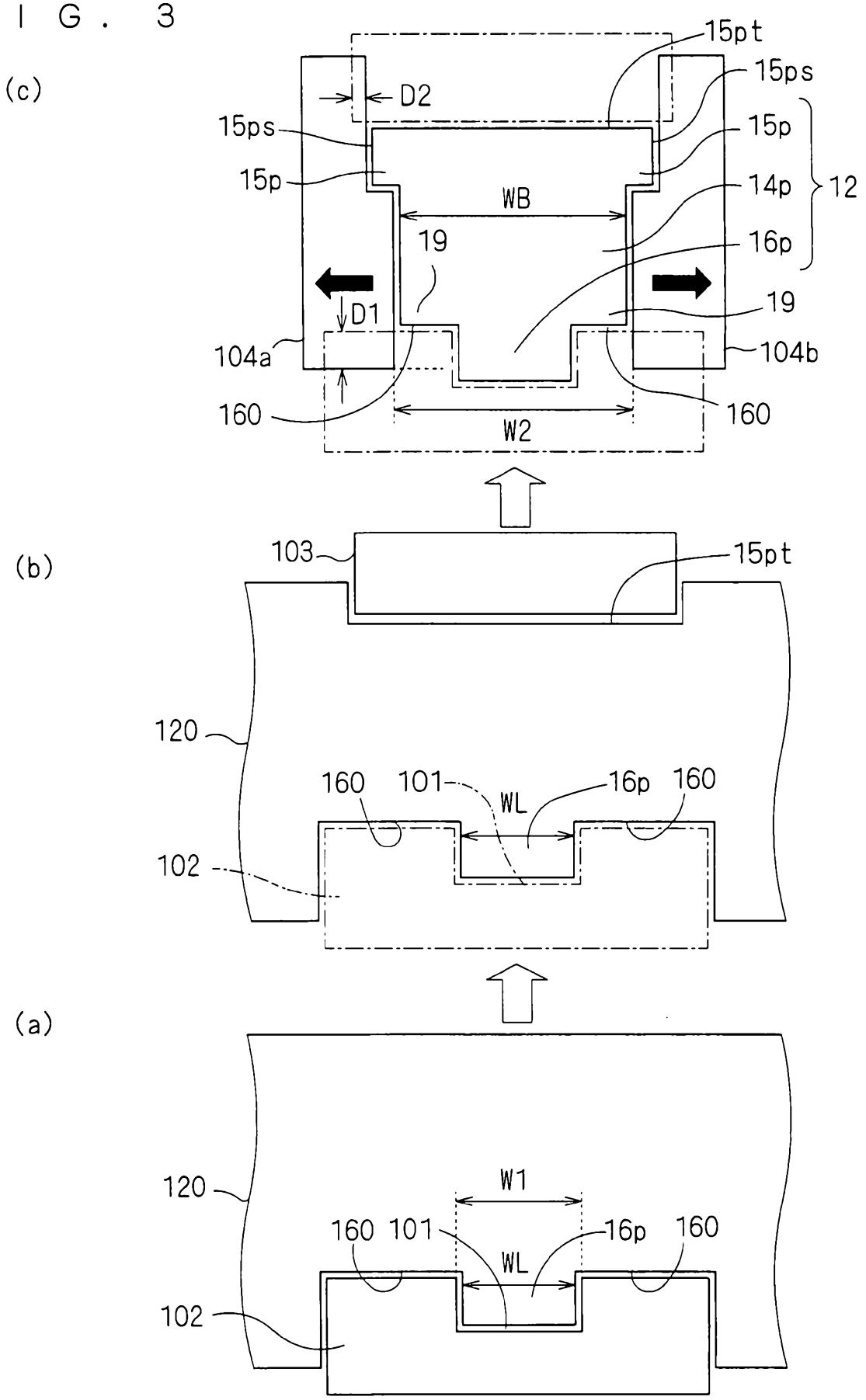
(c)
15pt
15ps
D2
15ps
15p
15p
14p
12
WB
19
16p
D1
19
104a
104b
160
160
W2
(b)
103
15pt
120
160
101
WL
16p
160
102
(a)
120
W1
160
101
16p
160
WL
102

2008336853 09 Jun 2010

FIG. 4

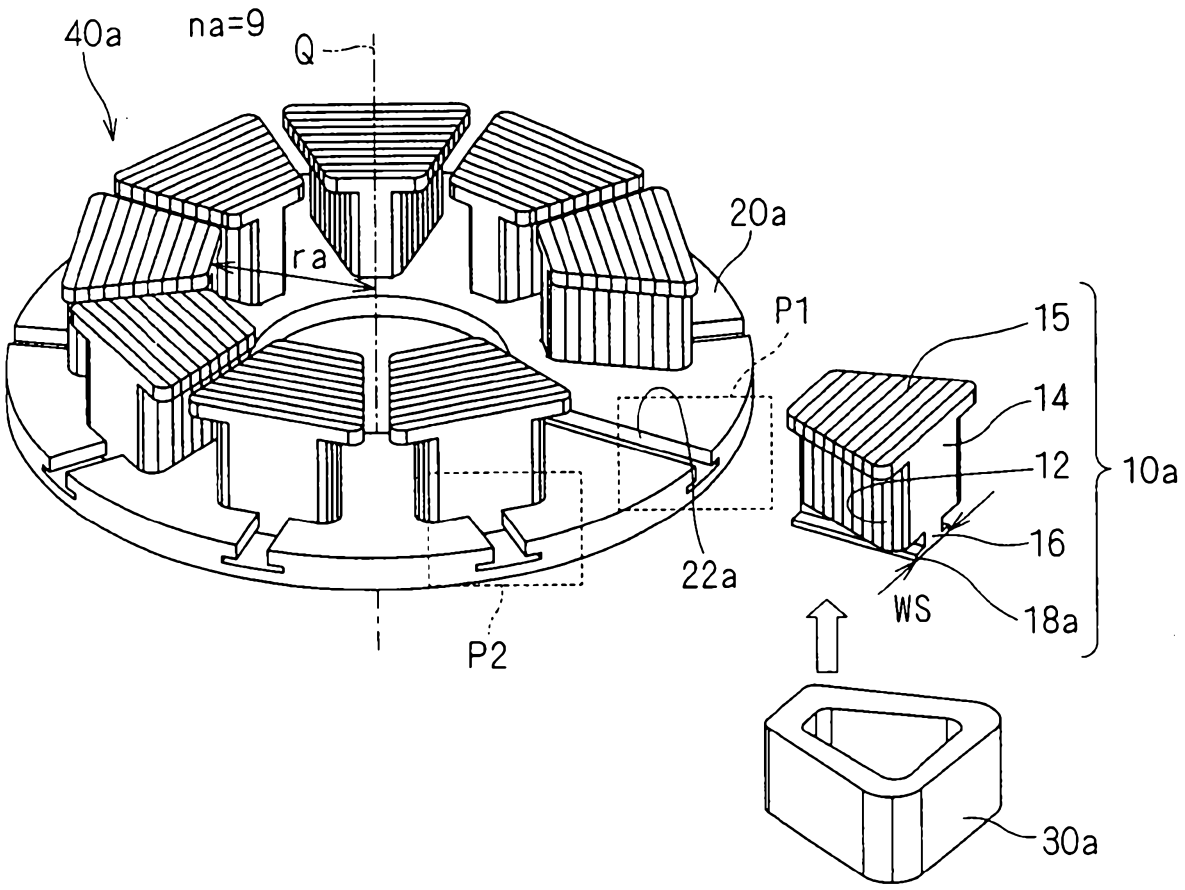

F I G . 5

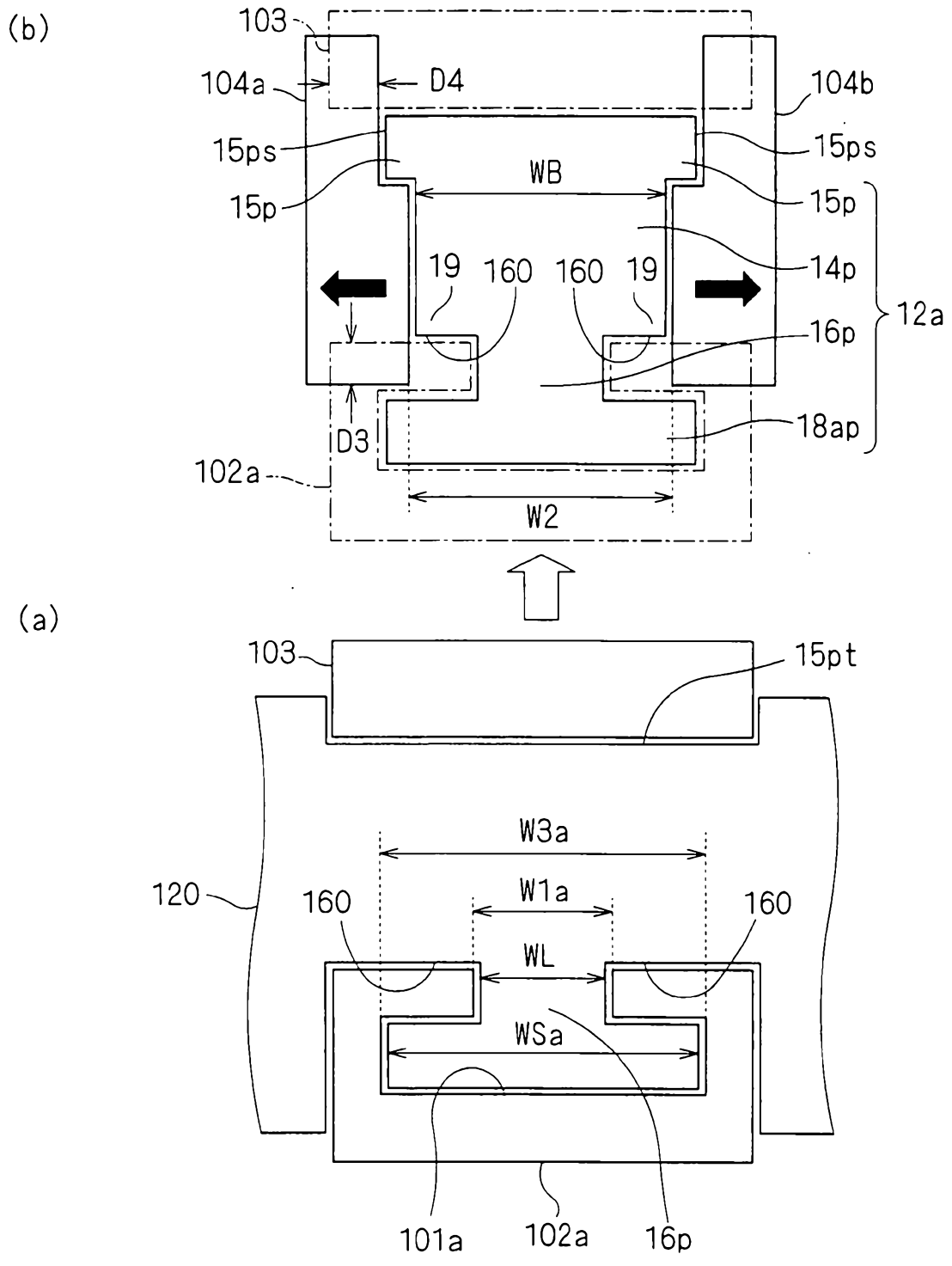
(b)
103
104a
D4
104b
15ps
15ps
WB
15p
15p
14p
19
160
160
19
12a
16p
D3
18ap
102a
W2
(a)
103
15pt
W3a
120
160
W1a
160
WL
WSa
101a
102a
16p

FIG. 6

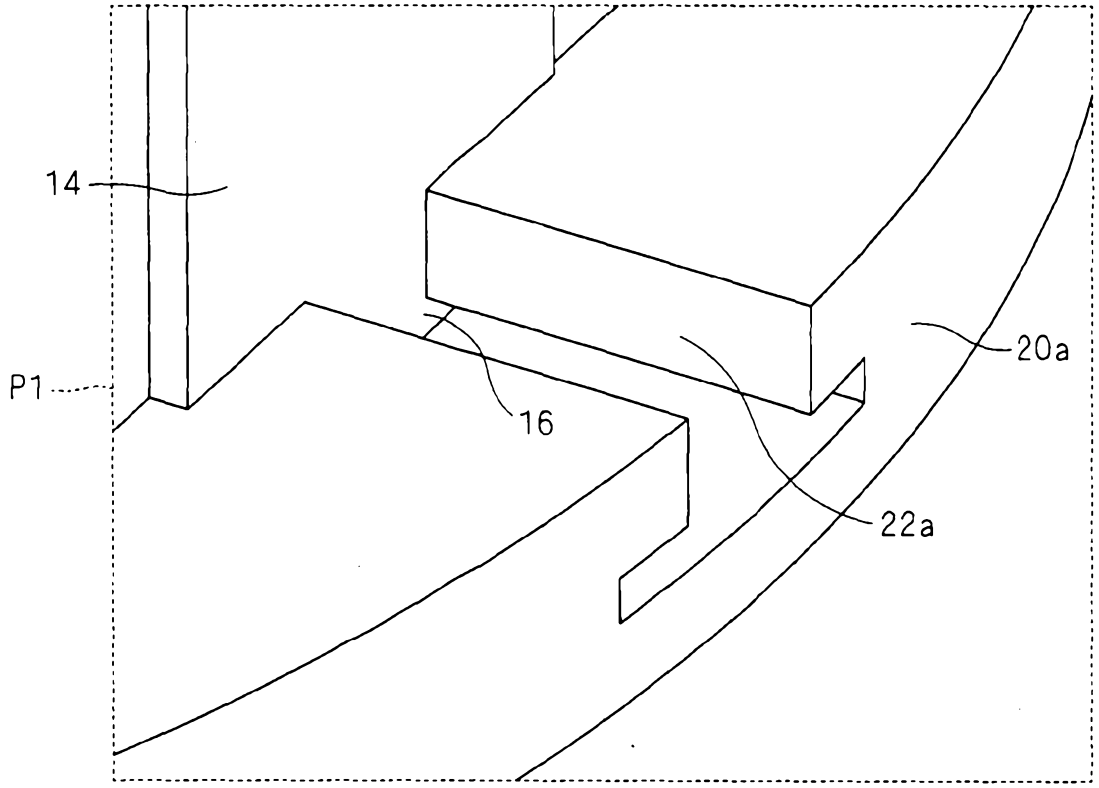

FIG. 7

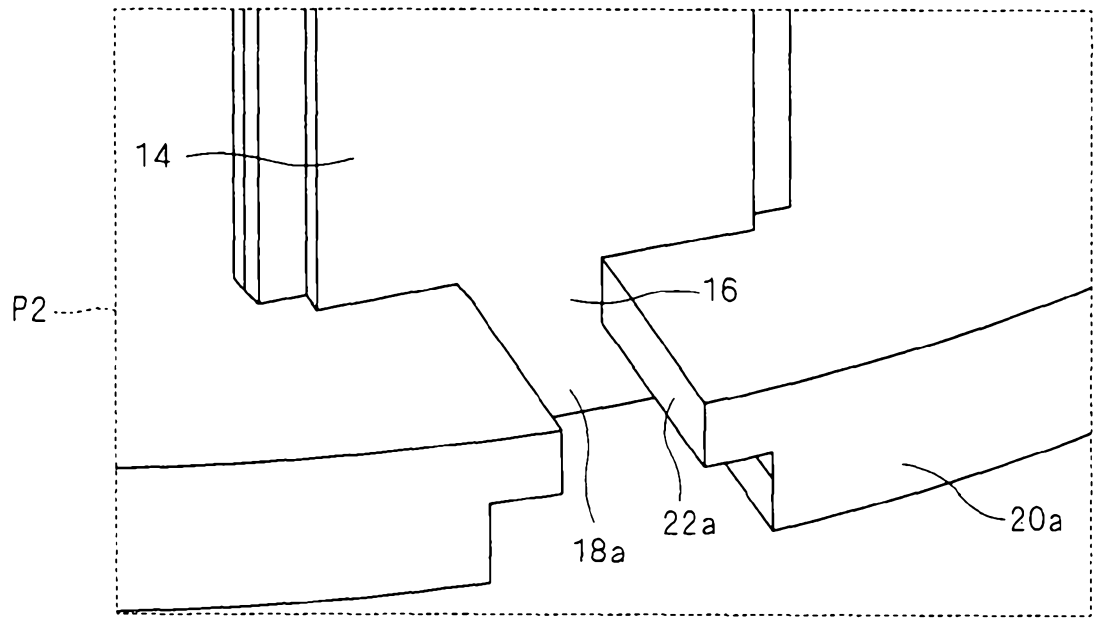

2008336853 09 Jun 2010

FIG. 8

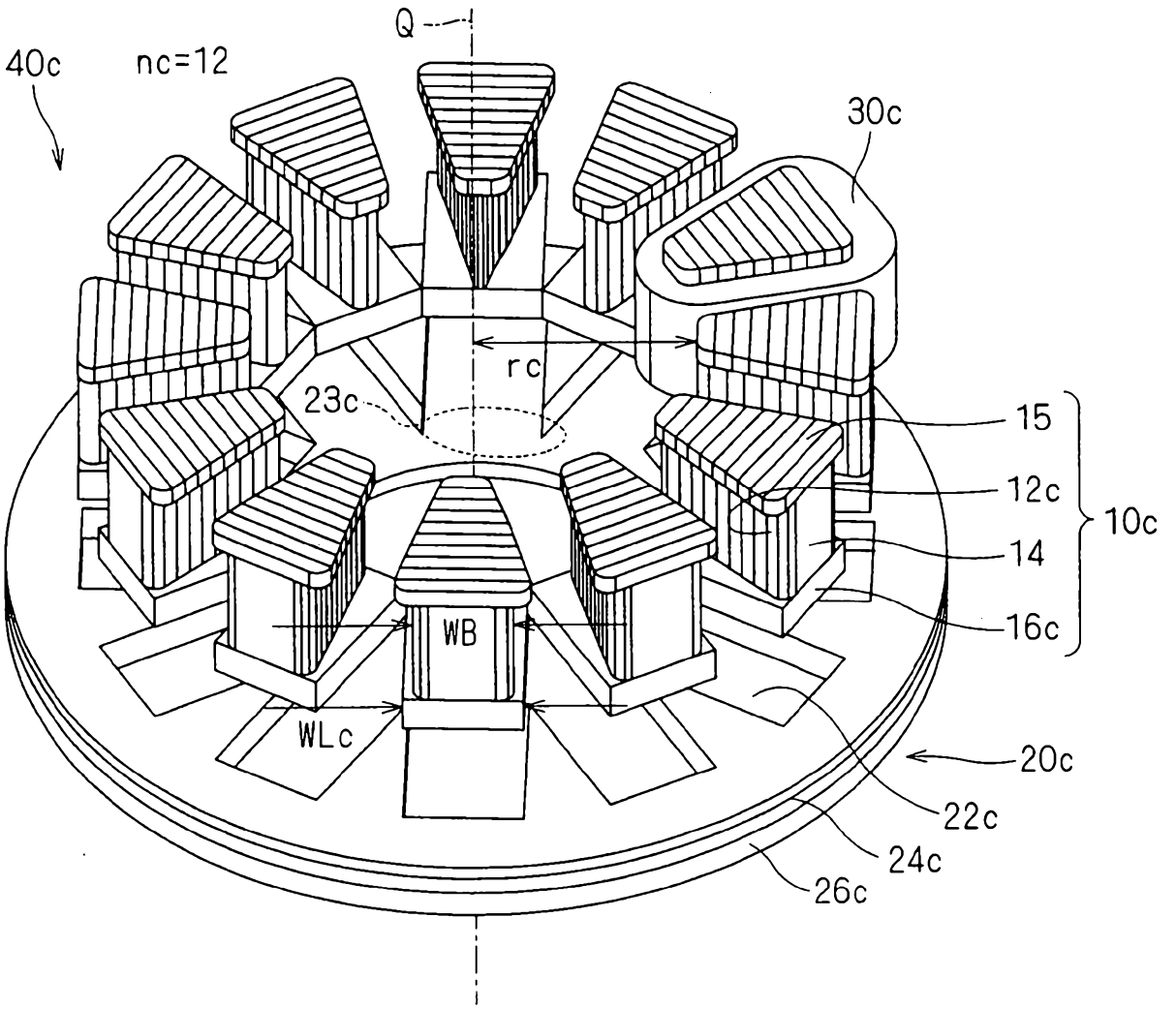

FIG. 9

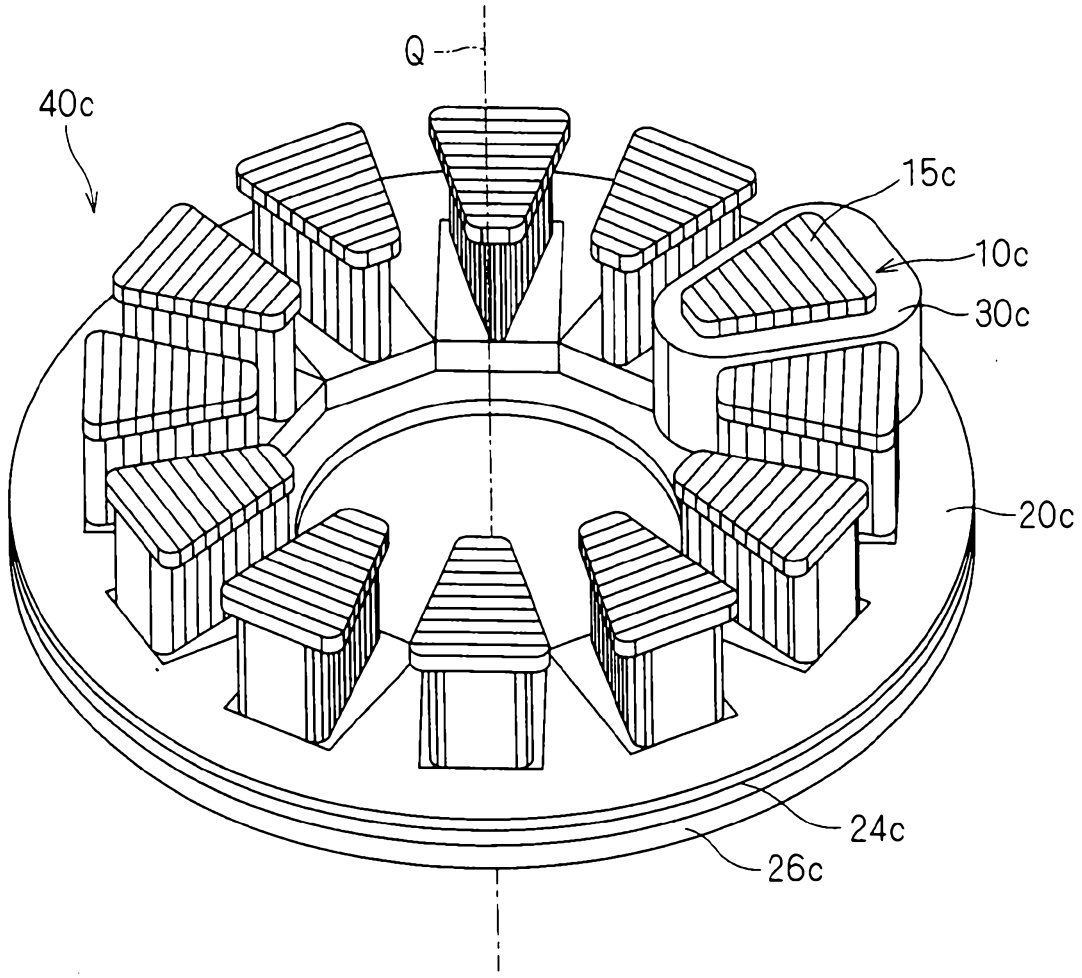

FIG. 10

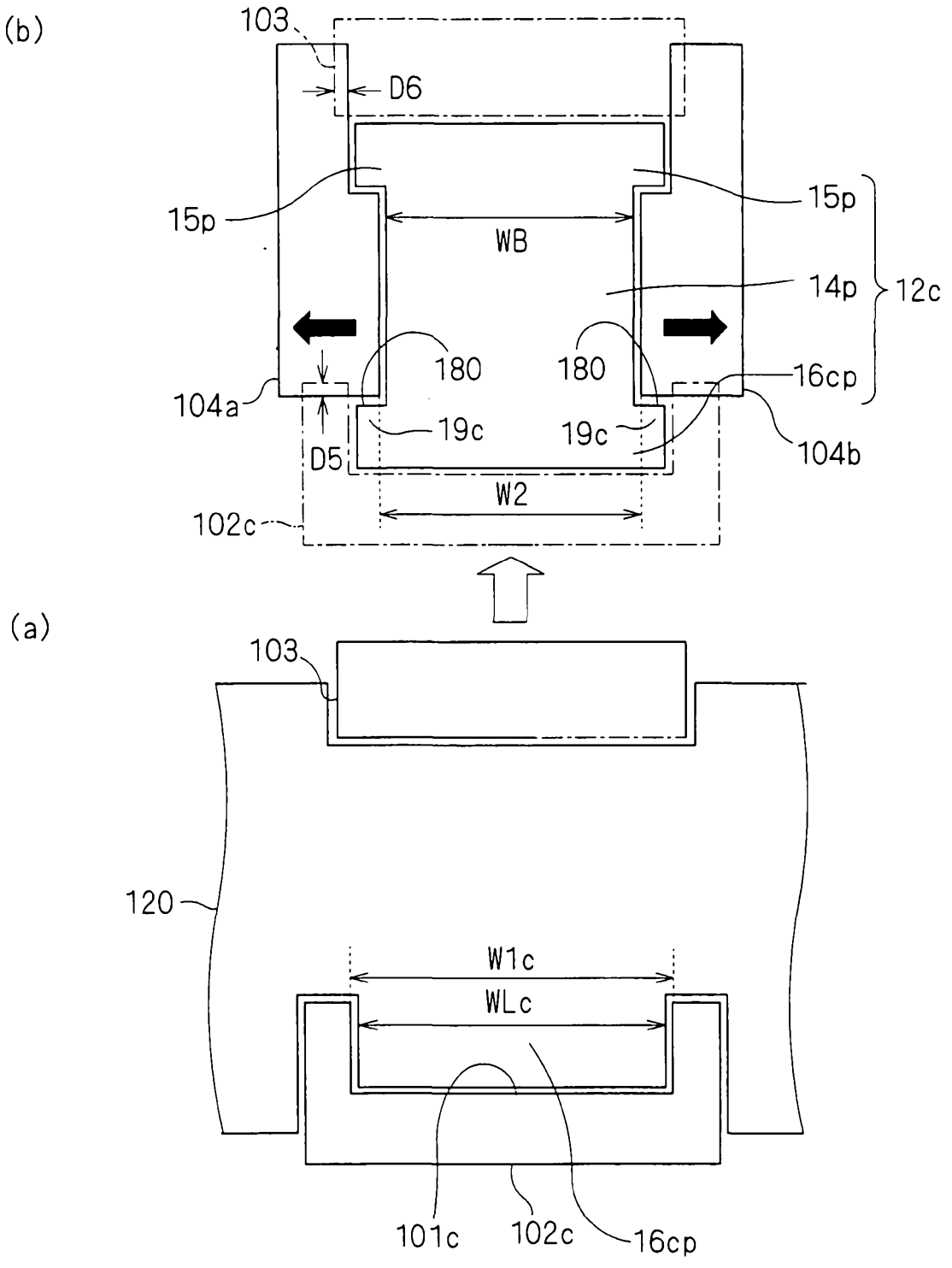
(b)
103
D6
15p
15p
WB
14p
12c
180
180
16cp
104a
19c
19c
104b
D5
W2
102c
(a)
103
120
W1c
WLc
101c
102c
16cp

2008336853 09 Jun 2010

FIG. 11

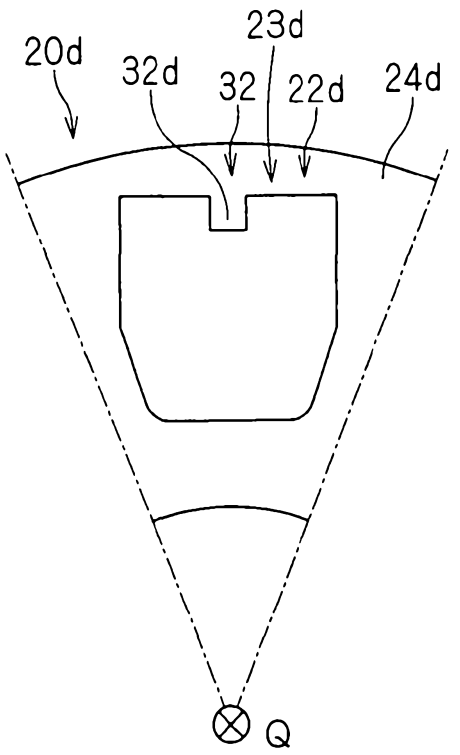

FIG. 12

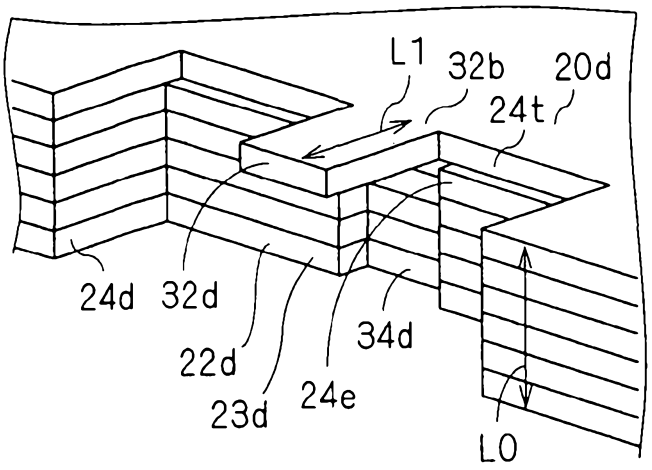

FIG. 13

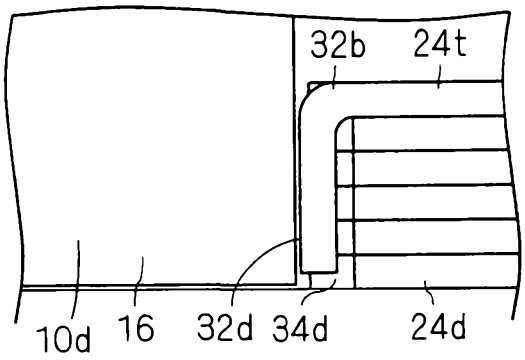

2008336853 09 Jun 2010

FIG. 14A

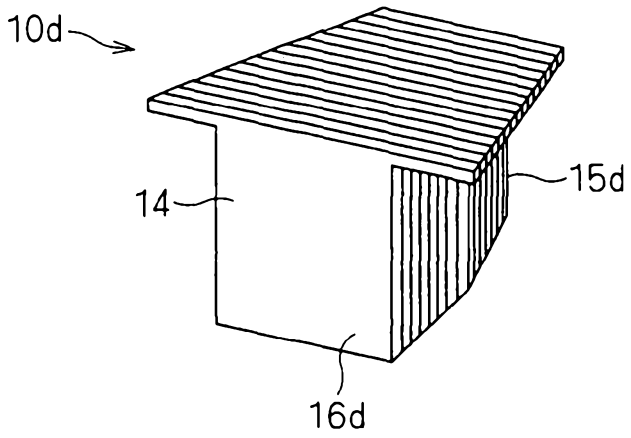

FIG. 14B

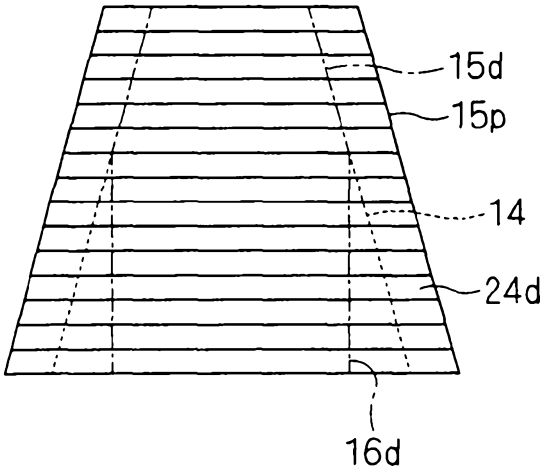

FIG. 15

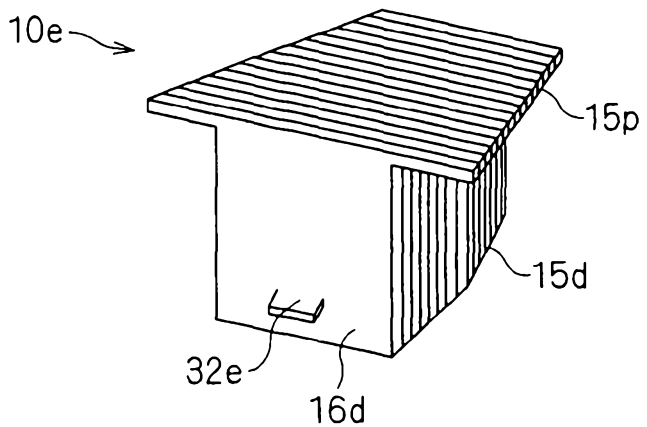

FIG. 16A

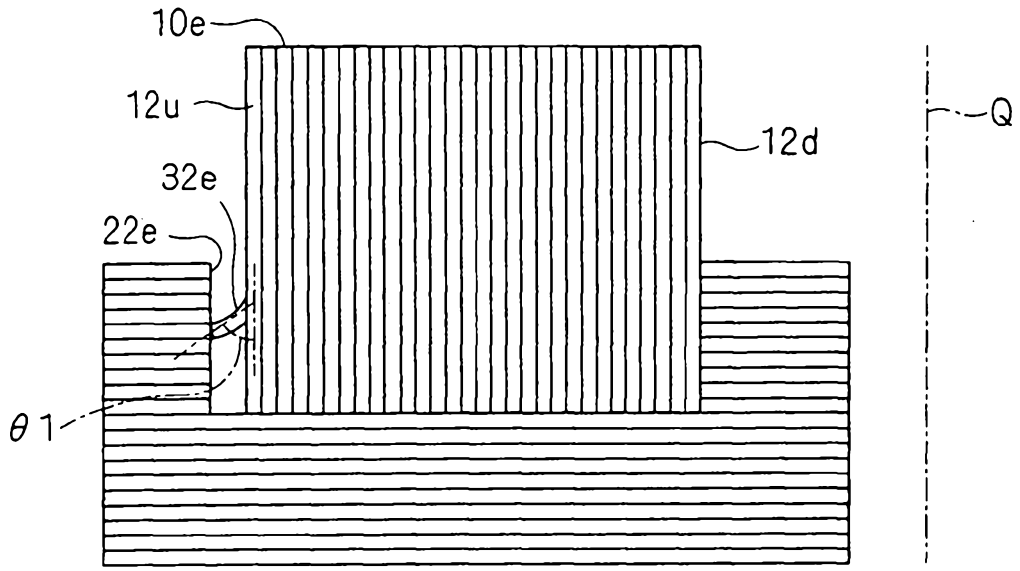

FIG. 16B

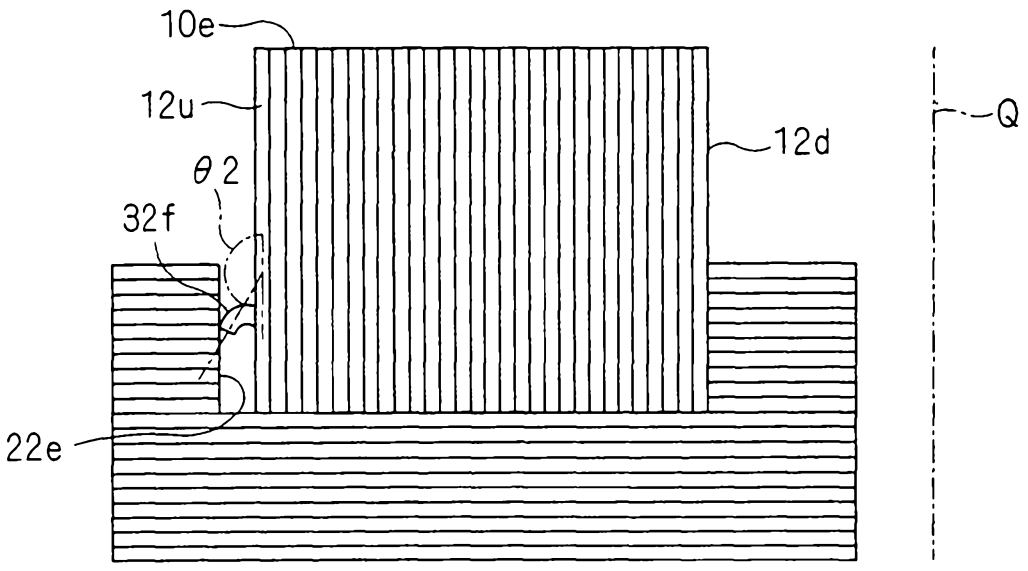

F I G . 1 7

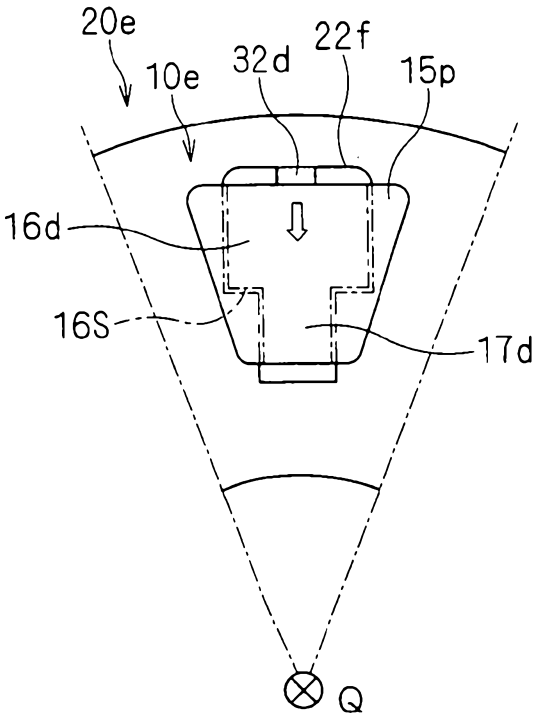

FIG. 18

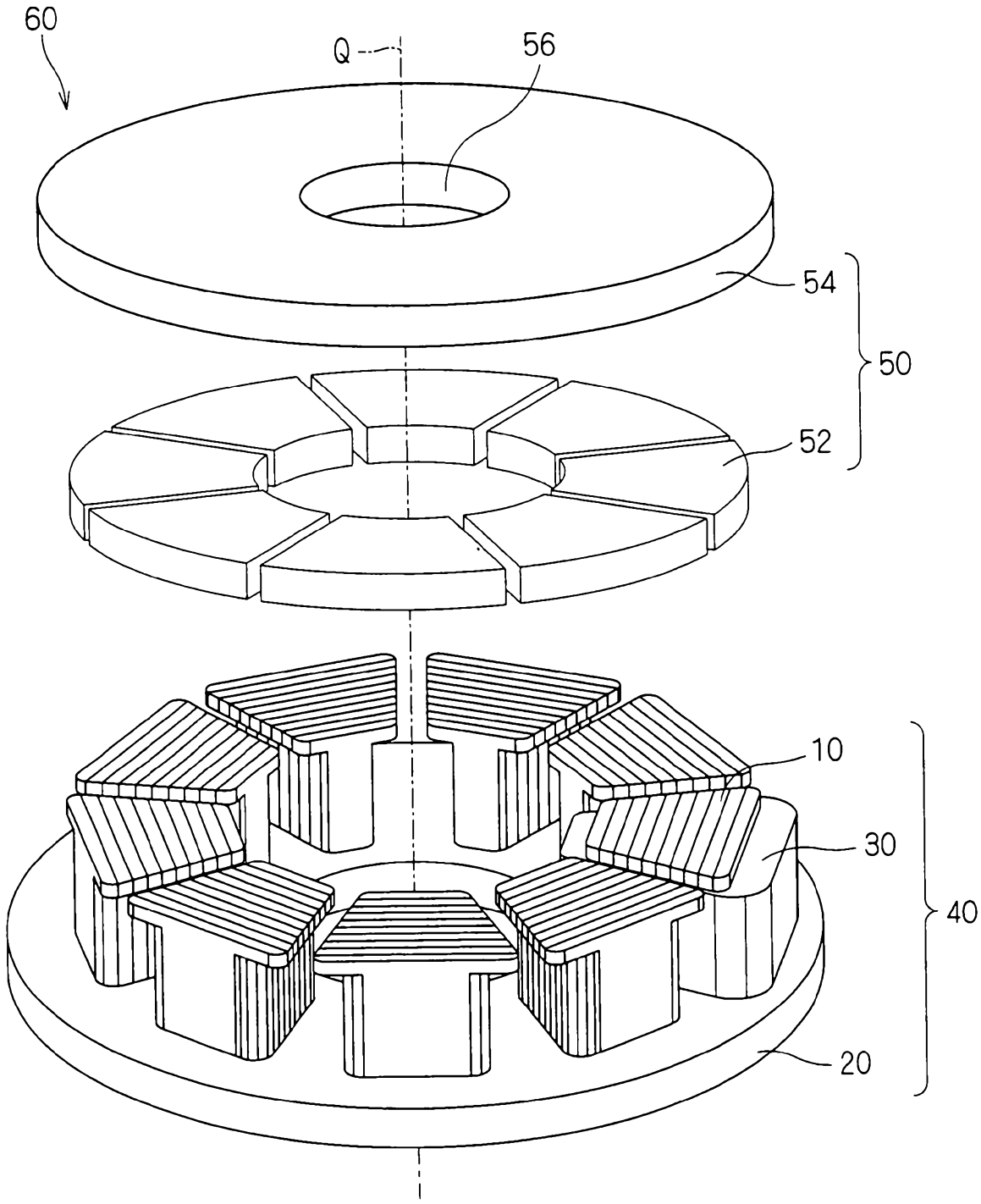

FIG. 19

