United States Patent

Saunders

[15] 3,648,383

[45] Mar. 14, 1972

[54] SEALING APPARATUS FOR TRANSPORT OF MATERIAL BETWEEN REGIONS AT DIFFERENT PRESSURES

[72] Inventor: **Roger L. Saunders**, Boxmoor, England

[73] Assignee: **Eastman Kodak Company**, Rochester, N.Y.

[22] Filed: **Apr. 6, 1970**

[21] Appl. No.: **25,758**

[30] **Foreign Application Priority Data**

Dec. 1, 1969 Great Britain 58,597/69

[52] **U.S. Cl.** **34/242,** 277/55

[51] **Int. Cl.** **F26b 25/00,** F16j 15/44

[58] **Field of Search** 34/92, 242; 277/53–57

[56] **References Cited**

UNITED STATES PATENTS

3,032,890	5/1962	Brick et al.	34/242 X
3,349,222	10/1967	Johnston	34/152 X
1,915,432	6/1933	Malkin	34/242

Primary Examiner—Frederick L. Matteson
Assistant Examiner—Harry B. Ramey
Attorney—Walter O. Hodsdon and Alfred P. Lorenzo

[57] **ABSTRACT**

A seal to permit the passage of material, such as a continuous web bearing a layer of coating composition, between two zones at different gas pressures comprises a narrow passageway in communication with the two zones, a plurality of transverse ribs spaced along the longitudinal extent of the passageway, and a plurality of spaced apertures located within the troughs between adjacent ribs and communicating with a vacuum manifold for withdrawing gas from the passageway to provide a progressive change in pressure from a value at the inlet to the passageway equivalent to the pressure in the zone from which material is being transported to a value at the outlet from the passageway equivalent to the pressure in the zone into which the material is being transported. In a preferred embodiment, the seal is comprised of a smooth arcuate plate and a curved castellated shoe positioned opposite and in close proximity to the plate to define a narrow arcuate passageway therebetween. The seal is especially useful in the vacuum drying of web material having a surface coating which is especially susceptible to damage, such as a web consisting of a support coated with one or more layers of photographic emulsion.

7 Claims, 3 Drawing Figures

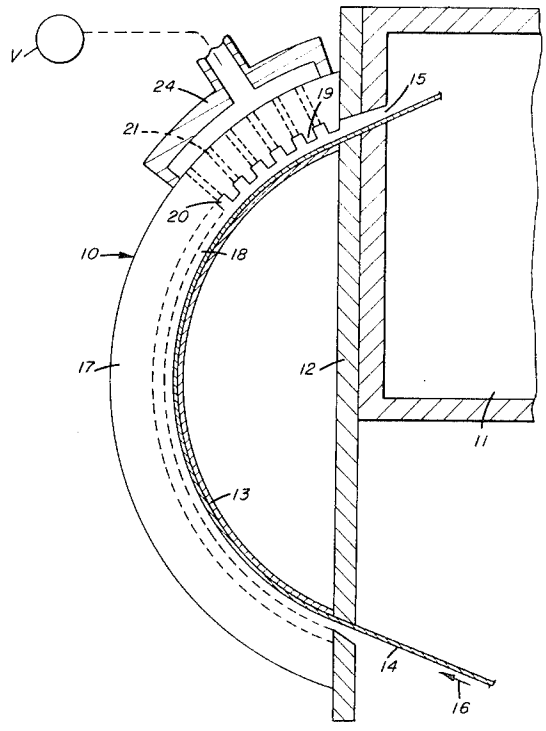

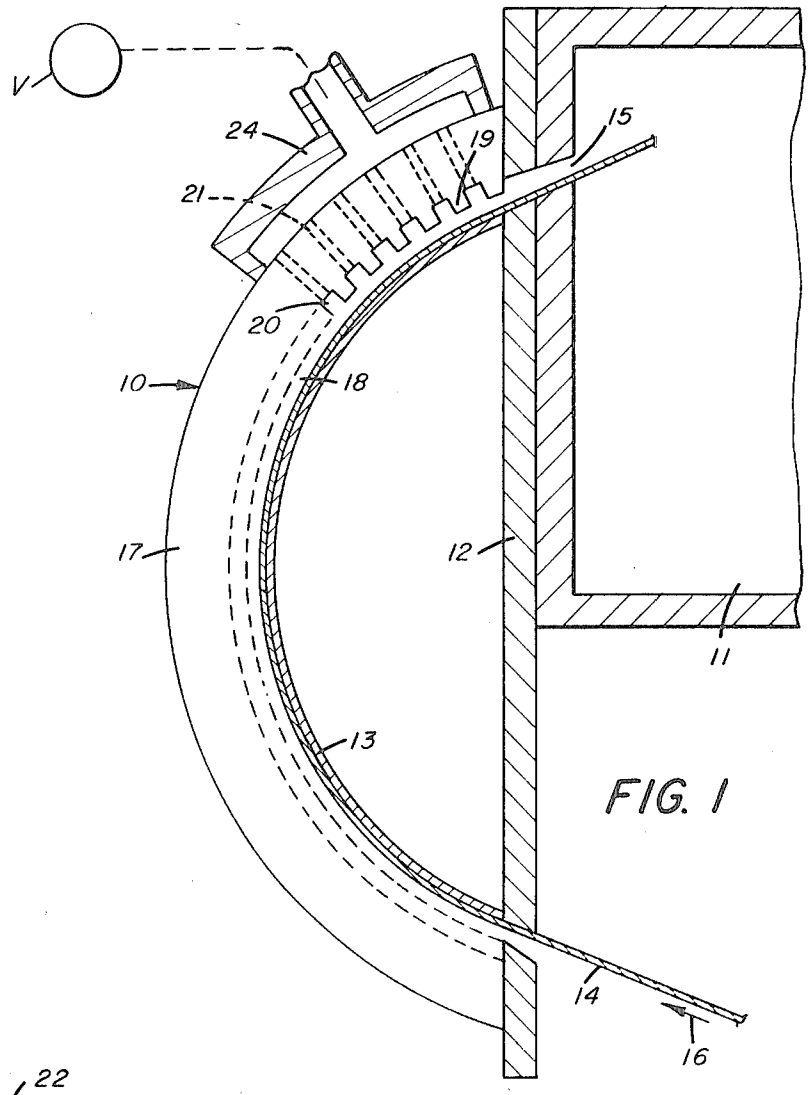

FIG. 1

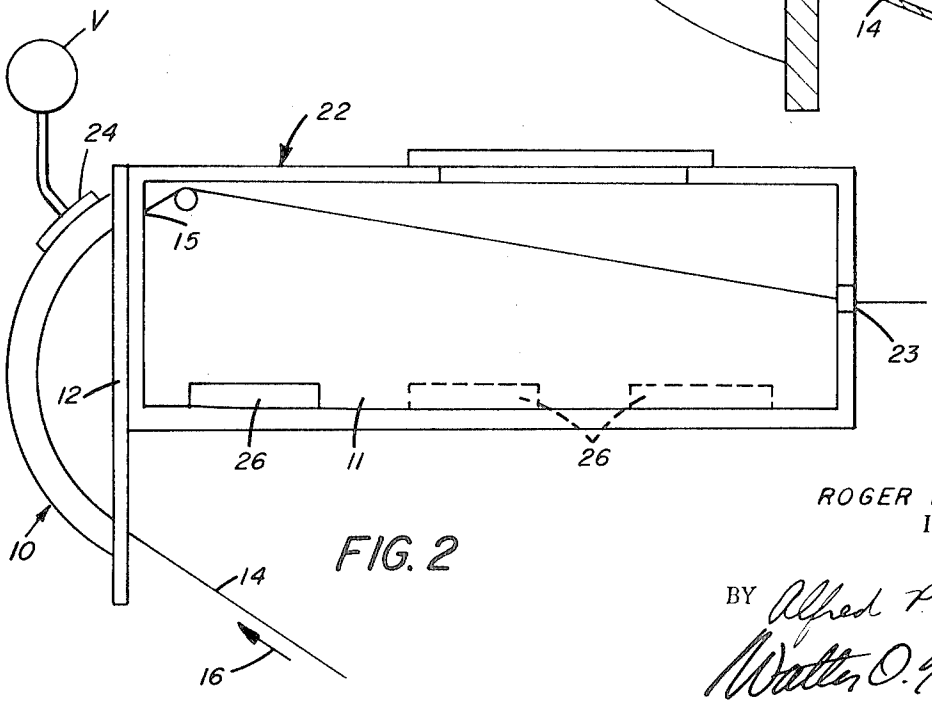

FIG. 2

ROGER L. SAUNDERS
INVENTOR.

BY Alfred P. Lorenzo
Walter O. Hodsdon
ATTORNEYS

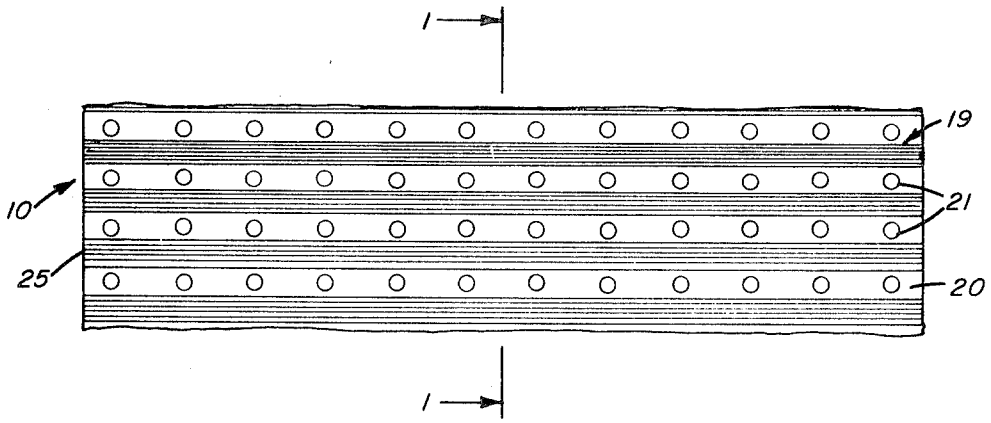

FIG. 3

ROGER L. SAUNDERS
INVENTOR.

BY Alfred P. Lorenzo
Walter O. Hodsdon
ATTORNEYS

SEALING APPARATUS FOR TRANSPORT OF MATERIAL BETWEEN REGIONS AT DIFFERENT PRESSURES

The present invention relates to seals for use between two zones at different pressures when transporting material between the two zones and to methods of providing such seals.

The seal of the present invention has the advantage that is of particular utility where it is desired to transport a material having a readily damageable coating between two zones at different gas pressures without damage to the coating and without substantial passage of gas between the two zones.

According to the present invention, there is provided a seal for use between two zones at different pressures when transporting material between the two zones, the seal comprising means defining a narrow passageway in communication with each of the two zones through which, in use, a material is transportable and means for progressively changing the gas pressure through the length of the passageway, when the seal is in use, from a value, at the inlet to the passageway, equivalent to the pressure in the zone from which the material is being transported to a value, at the outlet from the passageway, equivalent to the pressure in the zone into which the material is being transported.

In a preferred embodiment of the invention, the narrow passageway is defined by a surface, arranged to carry the material to be transported, and a shoe positioned opposite the surface; the show having a plurality of apertures extending therethrough which are connected to a means for transferring gas into or out of the passageway. Preferably, the shoe comprises a series of surface irregularities extending transversely of the passageway, respective apertures being located in troughs of the surface irregularities. The apertures and surface irregularities enable the pressure in the passageway to be changed progressively along its length. Conveniently, the surface arranged to carry the material is a polished plate formed of, for example stainless steel. The plate may be treated to reduce friction, for example, with polytetrafluoroethylene which may be applied in the form of an aerosol spray. Additionally, the plate may be cooled, for example, by the circulation of water at a relatively low temperature. In an alternative embodiment of the invention, the surface may be defined by a roller mounted for rotation in the direction in which the material is being transported.

Preferably, the seal also comprises means for preventing inflow of gas through the sides of the narrow passageway. For example, where the surface is a polished plate, gaskets, which may be made of rubber, can be provided along the sides of the passageway.

Advantageously, the surface irregularities of the shoe are in the form of castellations comprising upstanding ribs having the troughs therebetween. Preferably, each rib has a plurality of grooves extending longitudinally thereof.

The seal of the present invention is particularly useful where it is desired to transport a material from a zone at a first pressure to another zone at a second, lesser pressure. In this case, the means for transferring gas is in the form of one or more manifolds connected to a vacuum pump or respective pumps.

The narrow passageway should be of dimensions greater, but not substantially greater, than the material to be transported. For example, the point of closest approach of the shoe and the material to be transported may be of the order of 0.010 to 0.013 inch, although smaller or larger gaps may be used.

The seal of the present invention is particularly useful where the material is in the form of a web. In this case, the narrow passageway is preferably arcuate longitudinally so that the web may be maintained under slight tension. As described more fully hereinafter, the web material may be a photographic material comprising a support having coated thereon one or more hydrophilic colloid layers e.g., light sensitive silver halide emulsion layers. Other applications include the transfer of webs coated with liquids having high viscosity, of adhesively coated webs, and of webs coated with set, non-hydrophilic colloids.

According to the present invention, there is further provided an apparatus comprising a chamber defining a zone arranged to be maintained at a pressure different from ambient pressure, said chamber having an inlet and an outlet through each of which a material is transportable, and wherein at least the inlet is provided with a seal as aforestated.

Preferably, the apparatus is a vacuum drying apparatus and the chamber is a low-pressure enclosure.

According to the present invention, there is also provided a method of transporting a material between two zones maintained at different pressures, wherein the fluid pressure acting on the material is progressively changed from a value equivalent to that of the zone from which the material is being transported to a value equivalent to that of the zone into which the material is being transported.

In a preferred embodiment of the invention, the material is transferred from a zone at a particular pressure, e.g., ambient atmospheric pressure, to a zone maintained at a lower pressure. This embodiment of the invention is particularly useful where it is desired to dry coated hydrophilic colloid layers, e.g., light sensitive silver halide emulsion layers. The hydrophilic colloid layers may have been previously chilled.

The invention will now be described further with reference to the accompanying drawings, in which:

FIG. 1 is a partial, schematic view of a seal according to the present invention taken along the line 1—1 of FIG. 3;

FIG. 2 is a schematic view of a vacuum drying apparatus incorporating a seal according to the present invention; and

FIG. 3 is a fragmentary view, to an enlarged scale, of part of the seal shown in FIG. 1.

In FIG. 1 there is shown a seal **10** which is mounted on a vacuum chamber **11** by means of a backing plate **12**. The seal **10** comprises a polished arcuate surface **13**, formed, for example, of a stainless steel. The surface **13** is attached to the backing plate **12** by means of bolts (not shown). The surface **13** is treated to reduce friction e.g., by polytetrafluoroethylene applied in the form of an aerosol spray, and is provided with a cooling means (not shown) e.g., means for circulating relatively low temperature water. A web **14**, for example, a coated photographic material, is arranged to be passed over the surface **13** through an inlet **15** into the vacuum chamber **11** in the direction indicated by the arrow **16**.

The seal **10** further comprises a shoe **17** of substantially the same arcuate shape as the surface **13** and mounted closely adjacent thereto to define a narrow passageway **18**. The show **17** comprises a series of transverse castellations comprising upstanding ribs **19** (some of which are not shown) interspersed by troughs **20**. The point of closest approach of the ribs and the web is preferably constant and of the order of 0.010 to 0.013 inch but smaller or larger gaps may be used.

Preferably, means are provided for sealing the narrow passageway **18** along the sides thereof to prevent inflow of air therethrough. For example, gaskets (not shown), which may be made of rubber, can be provided along each side of the narrow passageway **18**. Within each of the troughs **20** a plurality of apertures **21** are provided (See FIG. 3). In a preferred embodiment, the ribs **19** have a plurality of lengthwise grooves **25** therealong. The apertures **21** extend radially of the arcuate shape of and through the shoe **17**. A plurality of manifolds **24** (only one of which is shown) which each communicate with respective troughs **20** are mounted externally of the shoe **17** and are connected to a vacuum pump (not shown). In the embodiment illustrated, the arcuate shape of the passageway **18** enables the web **14** to be maintained under slight tension.

In FIG. 2 there is shown a vacuum drying apparatus **22** comprising a vacuum chamber **11** upon which is mounted a backing plate **12**. The vacuum chamber **11** comprises an inlet **15** and an outlet **23**. Mounted externally of the chamber **11** at the inlet **15** is a seal **10** of the type shown in FIG. 1. Mounted externally of the chamber **11** at the outlet **23** is a further seal (not shown) which may be in accordance with the present invention or may be a conventional seal, such as contacting rollers having wipers, as the coated material is by such time dry. Heating means **26** are provided in the chamber **11**.

In FIG. 3 there is shown a part of the shoe **17**, to an enlarged scale, wherein the construction of the ribs **19**, troughs **20**, apertures **21** and also the lengthwise grooves **25** can be seen more clearly.

In operation, a material such as a web **14** in the form of a chilled, undried photographic material coated with hydrophilic colloid layers is transported through the seal **10** and into the vacuum chamber **11**.

The vacuum pump is energized and draws air through the apertures **21** from the narrow passageway **18** defined by the surface **13** and the shoe **17**. Thus, the pressure within the narrow passageway **18** is reduced progressively in the direction of travel of the material from the external pressure at the inlet to the seal, to a value, at the exit from the seal, which is preferably equivalent to the pressure inside the vacuum chamber **11**. This is because the air travelling with the material through the seal **10** has to pass successively through a plurality of short, narrow passages defined between the ribs **19** and the surface **13** with wider passages defined by the troughs **20** and the surface **13** therebetween. The pressure profile within the seal **10** may be measured by pressure tappings and suitable pressure gauges or manometers. It may be necessary to control this pressure profile by adjusting the pumping speed of the vacuum pump or by altering the number of apertures **21** in particular troughs **20**, through which air can be drawn, in order to avoid possible damage to the coating of the material. Alternatively, valve means (not shown) may be located between each manifold **24** and the pump to regulate the rate at which air is drawn through the respective manifolds. In the embodiment shown, the web **14** is coated on one side only and the coated side faces the shoe **17**.

In an alternative embodiment of the invention, the surface **13** may be defined by a roller mounted for rotation in the direction in which the material is being transported. In this case, a further seal would be provided in the chamber **11** at the exit of the surface and at the sides of the roller.

A number of other parameters have to be taken into account when operating the seal in drying a photographic material, to avoid damage to coating of the material being transported. These are:

a. the seal length and the number and size of the castellations;
b. gap thickness between the seal and the coating;
c. pressure difference between the inlet and exit of the seal;
d. temperature of the arcuate surface;
e. the type of hydrophilic colloid used and concentration thereof;
f. the presence or absence of salts modifying the character of the colloid; and
g. treatment of the coated web, particularly, chilling thereof between the point at which it is coated and that at which it enters the seal.

The properties of the seal were investigated using a coating and setting unit. A 5-inch wide web moving at a speed of 5 feet per minute was coated with gelatin solution and chilled by contact with a water cooled metal plate for 10 seconds. The set web was then exposed to room air for 15 seconds and then passed into one or other of the two seals (a) and (b) described below. After passing through the seal into a low-pressure enclosure, the web was visually examined through a window. The seal and enclosure are shown in FIG. 2.

One or other of two seals (a) and (b) substantially as shown in FIG. 1 were used. The seals had the following dimensions:

	(a)	(b)
Length of film path in seal	5"	15"
Width of seal	6"	6"
Width of web	5"	5"
No. of ribs	16	60
No. of manifolds	4	12
Length in direction of seal of ribs	⅛"	9/64"
Length in direction of seal of troughs	⅛"	7/64"
No. of holes per trough	10	14
Size of holes	⅛"	7/64"
No. of troughs per vacuum connection	3	5
Height of ribs	⅛"	⅛"

For seal (b) each rib was scored with equally spaced grooves, one sixty-fourths inch wide, one thirty-second inch deep along its length

Distance between ribs and surface 0.020–0.022 inch
Thickness of web 0.005 inch
Coating speed 5 ft./min.
Temperature of chill plate and seal plate 0° C.

Typical conditions under which coatings were passed successfully into the chamber without damage are given in the examples below, in which a medium grade bone gelatin was used.

EXAMPLE 1

Seal (a)
Coating solution—5 percent gelatin containing black colloidal silver pigment
Coating thickness—0.002 inch
Pressure in vacuum chamber—230 mm. Hg
Table I gives the pressure at each trough in the seal.

EXAMPLE 2

Seal (a)
Coating solution—5 percent gelatin containing a black colloidal silver pigment
Coating thickness—0.004 inch
Pressure in vacuum chamber 570 mm. Hg
Table I gives the pressure at each trough in the seal.

EXAMPLE 3

Seal (a)
Coating solution—7 percent gelatin containing a black colloidal silver pigment
Coating thickness 0.002 inch
Pressure in vacuum chamber—230 mm. Hg
Table I gives the pressure at each trough in the seal.

EXAMPLE 4

Seal (a)
Coating solution—7 percent gelatin containing a black colloidal silver pigment
Coating thickness—0.004 inch
Pressure in vacuum chamber—380 mm. Hg
Table I gives the pressure at each trough in the seal.

EXAMPLE 5

Seal (b)
Coating solution—4 percent gelatin solution containing colloidal silver pigment
Coating thickness—0.002 inch
Pressure in vacuum chamber—8.4 mm. Hg
Table II gives the pressure at each trough in the seal.

EXAMPLE 6

Seal (b)
Coating solution—5 percent gelatin solution containing colloidal silver pigment
Coating thickness—0.004 inch
pressure in vacuum chamber—7.3 mm. Hg
Table II gives the pressure at each trough in the seal.

EXAMPLE 7

Seal (b)
Coating solution—7 percent gelatin solution containing colloidal silver pigment
Coating thickness—0.004 inch
Pressure in vacuum chamber—7.0 mm. Hg
Table II gives the pressure at each trough in the seal.

An unsuitable pressure profile within the seal will produce damage to a coated web because of excessive air movement within the seal.

By adopting nonoptimum pressure profiles, damage was caused to the coating. However, if under these circumstances the chilling and setting of the web was improved, the damage to the coating could be lessened or obviated. Hence, the limits obtained (i.e., of colloid concentration and coating thickness) are peculiar to the equipment used, and in no way represent the limits of the invention. Modifications to the seal or chill section should make it possible to convey weaker and thicker coatings.

TABLE I

Pressures (mm. Hg) at various points along seal (a) for Examples 1 to 4

Example	1	2	3	4
Colloid concentration	5%	5%	7%	7%
Coating thickness	0.002"	0.004"	0.002"	0.004"
Atmospheric pressure	760	760	760	760
Pressure at trough 2	665	760	740	730
Pressure at trough 3	630	760	730	710
Pressure at trough 4	605	760	726	695
Pressure at trough 6	—	750	636	650
Pressure at trough 7	400	745	600	630
Pressure at trough 8	400	740	580	615
Pressure at trough 9	420	735	570	580
Pressure at trough 10	340	730	530	550
Pressure at trough 11	290	720	500	500
Pressure at trough 13	300	690	460	500
Pressure at trough 14	290	670	395	470
Pressure at trough 15	265	640	290	430
Pressure in vacuum chamber	230	570	230	380

TABLE II

Pressures (mm. Hg) at various points along seal (b) for Examples 5 to 7

Example	5	6	7
Colloid concentration	4%	5%	7%
Coating thickness	0.002"	0.004"	0.004"
Atmospheric pressure	757	747	753
Pressure at trough No. 6	686	694	—
Pressure at trough No. 7	674	684	—
Pressure at trough No. 8	658	674	648
Pressure at trough No. 9	646	667	631
Pressure at trough No. 10	636	659	621
Pressure at trough No. 11	628	652	607
Pressure at trough No. 12	619	644	605
Pressure at trough No. 13	606	634	576
Pressure at trough No 14	590	624	559
Pressure at trough No. 15	576	614	539
Pressure at trough No. 16	559	600	517
Pressure at trough No. 17	545	588	494
Pressure at trough No. 18.	516	565	464
Pressure at trough No. 19	493	538	427
Pressure at trough No. 20	469	525	469
Pressure at trough No. 21	424	496	332
Pressure at trough No. 22	401	487	295
Pressure at trough No. 23	341	443	246
Pressure at trough No. 24	295	419	250
Pressure at trough No. 25	279	412	240
Pressure at trough No. 26	270	354	199
Pressure at trough No. 27	242	311	164
Pressure at trough No. 28	219	288	150
Pressure at trough No. 29	191	233	149
Pressure at trough No. 30	190	230	141
Pressure at trough No. 31	186	225	131
Pressure at trough No. 32	174	210	103
Pressure at trough No. 33	156	183	87
Pressure at trough No. 34	134	150	85
Pressure at trough No. 35	131	146	79
Pressure at trough No. 36	116	130	67
Pressure at trough No. 37	93	101	54
Pressure at trough No. 38	84	88	—
Pressure at trough No. 39	80	87	—
Pressure at trough No. 40	78	84	—
Pressure at trough No. 41	68	70	36
Pressure at trough No. 42	60	60	31
Pressure at trough No. 43	54	54	27
Pressure at trough No. 44	51	52	26
Pressure at trough No. 45	50	50	25
Pressure at trough No. 46	44	44	21
Pressure at trough No. 47	38	40	18
Pressure at trough No. 48	37	35	16
Pressure at trough No. 49	36	33	16
Pressure at trough No. 50	36	34	15
Pressure at trough No. 51	33	31	14
Pressure at trough No. 52	30	29	14
Pressure at trough NO. 53	26	26	14
Pressure at trough No. 54	25	23	11
Pressure at trough No. 55	25	24	14
Pressure at trough No. 56	24	23	14
Pressure at trough No. 57	22	21	14
Pressure at trough No. 58	17	17	13
Pressure at trough No. 59	16	16	13
Pressure at trough No. 60	14	13	12
Pressure in vacuum chamber	8.4	7.3	7.0

It will be appreciated that webs wider than 5 inches can be transported through a seal according to the invention providing the mechanical strength of the seal is adequate to withstand the pressures involved.

If desired, the spacing between the coated layer and the seal can be varied beyond the limits used in the examples. However, larger spacings require more air removal capacity while smaller spacings require more precise control of web movement.

If it is desired to transport weaker colloid solutions, a shoe having more castellations and using a more gradual pressure profile may be used.

Modifications within the scope of the present invention are envisaged. For example, if a web coated on both sides was to be transported, a double seal in which a castellated shoe was mounted on both sides of the inlet to the vacuum chamber could be used. It would be necessary, however, for the narrow passageway to have a planar shape. In this way the coated web would make no physical contact with the seal.

The invention has been described in detail with particular reference to preferred embodiments thereof, but it will be understood that variations and modifications can be effected within the spirit and scope of the invention.

I claim:

1. Sealing apparatus for the passage of material between two zones at different gas pressures, comprising a continuous plate; a shoe mounted opposite said plate and narrowly spaced therefrom to form a continuous narrow passageway therebetween having an open inlet and outlet in communication with opposite ones of said zones for passage of said material between said zones, the surface of said shoe forming one surface of said passageway including a plurality of transverse ribs which extend into said passageway and are spaced along the length thereof, said shoe provided with a plurality of apertures in communication with said passageway and located between adjacent ribs, and a vacuum manifold system in communication with said plurality of apertures for maintaining a pressure within said passageway which progressively changes from a pressure at the inlet to said passageway equivalent to the pressure in the zone from which the material enters to a pressure at the outlet of said passageway equivalent to the pressure in the zone into which the material passes.

2. Apparatus as described in claim 1 wherein said plate is of an arcuate configuration and said shoe is curved to correspond to the configuration of said plate and thereby form an arcuate passageway.

3. Sealing apparatus for the passage of a continuous web between two zones at different gas pressures, comprising

a smooth arcuate plate for slideably supporting said web,

a curved shoe mounted opposite said plate and narrowly spaced therefrom to form an arcuate passageway therebetween for passage of said web, said shoe having a plurality of transversely extending ribs spaced along its longitudinal extent and protruding into said passageway and a plurality of spaced apertures within each of the troughs between adjacent ribs communicating with said passageway, and

a vacuum manifold system communicating with said plurality of apertures for withdrawing gas from said passageway through said apertures.

4. Sealing apparatus for sealing a port within a wall to permit the passage of a continuous web therethrough while maintaining a different gas pressure on each side of said wall, comprising

an arcuate plate mounted on said wall adjacent said port for slideably supporting said web and directing it through said port,

a curved shoe mounted opposite said plate and narrowly spaced therefrom to form an arcuate passageway therebetween for passage of said web, said shoe having a plurality of transversely extending ribs spaced along its longitudinal extent and protruding into said passageway and a plurality of spaced apertures within each of the troughs between adjacent ribs communicating with said passageway,

a manifold communicating with said apertures, and

a vacuum pump operatively connected to said manifold for withdrawing gas from said passageway via said apertures.

5. Apparatus as described in claim 4 including a backing plate to which said arcuate plate and said shoe are affixed for mounting on said wall.

6. Apparatus as described in claim 3 wherein the distance between said arcuate plate and said curved shoe is such that the point of closest approach of said web material to said ribs is from about 0.010 to about 0.013 inch.

7. Apparatus as described in claim 3 wherein each of said ribs is provided with a plurality of longitudinally extending grooves in the surface of the rib directly opposite to said arcuate plate.

* * * * *