Sept. 30, 1958 C. J. GROSS 2,854,054

MACHINES FOR FEEDING BELTED AXIAL LEAD COMPONENTS TO UNBELTING, STRAIGHTENING, TRIMMING AND EJECTING STATIONS

Filed Nov. 6, 1956 15 Sheets-Sheet 1

Fig. 1

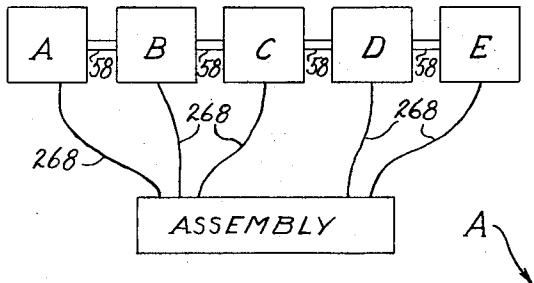

Fig. 2

Inventor

Charles J. Gross

By his Attorney

Thomas J. Lyon.

Sept. 30, 1958 C. J. GROSS 2,854,054

MACHINES FOR FEEDING BELTED AXIAL LEAD COMPONENTS TO UNBELTING, STRAIGHTENING, TRIMMING AND EJECTING STATIONS

Filed Nov. 6, 1956 15 Sheets-Sheet 2

Fig. 3

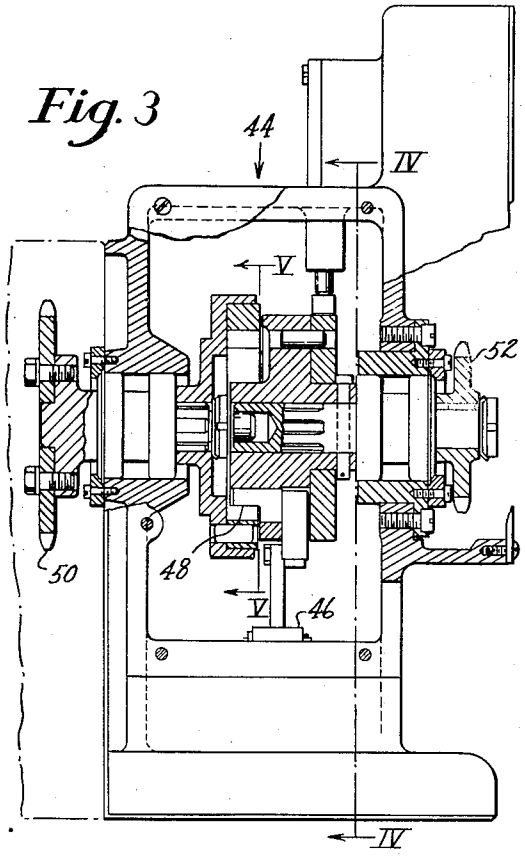

Fig. 4

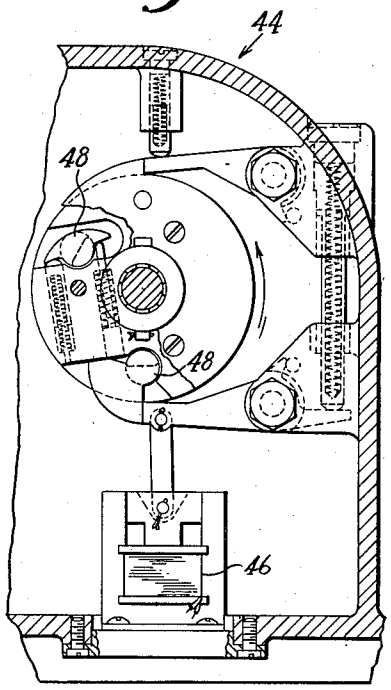

Fig. 5

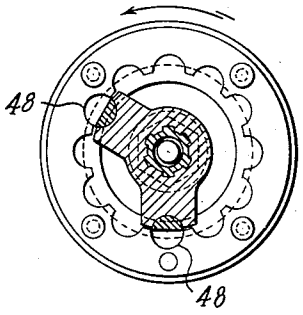

Inventor

Charles J. Gross

By his Attorney

Thomas J. Ryan

Sept. 30, 1958 C. J. GROSS 2,854,054

MACHINES FOR FEEDING BELTED AXIAL LEAD COMPONENTS TO UNBELTING, STRAIGHTENING, TRIMMING AND EJECTING STATIONS

Filed Nov. 6, 1956 15 Sheets-Sheet 3

Fig. 6

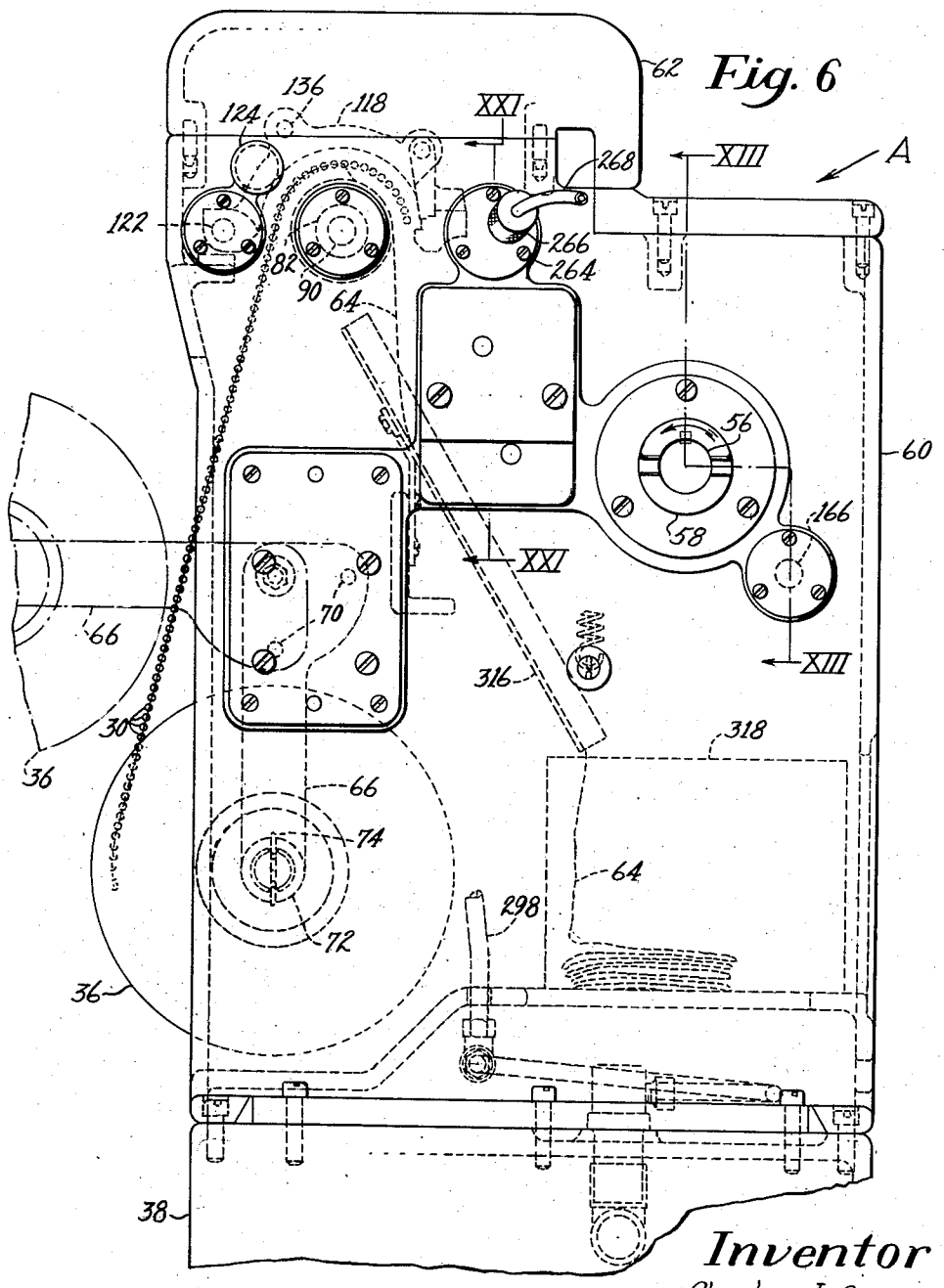

Inventor

Charles J. Gross

By his Attorney

Thomas J. Ryan

Sept. 30, 1958 C. J. GROSS 2,854,054

MACHINES FOR FEEDING BELTED AXIAL LEAD COMPONENTS TO UNBELTING, STRAIGHTENING, TRIMMING AND EJECTING STATIONS

Filed Nov. 6, 1956 15 Sheets-Sheet 4

Fig. 7

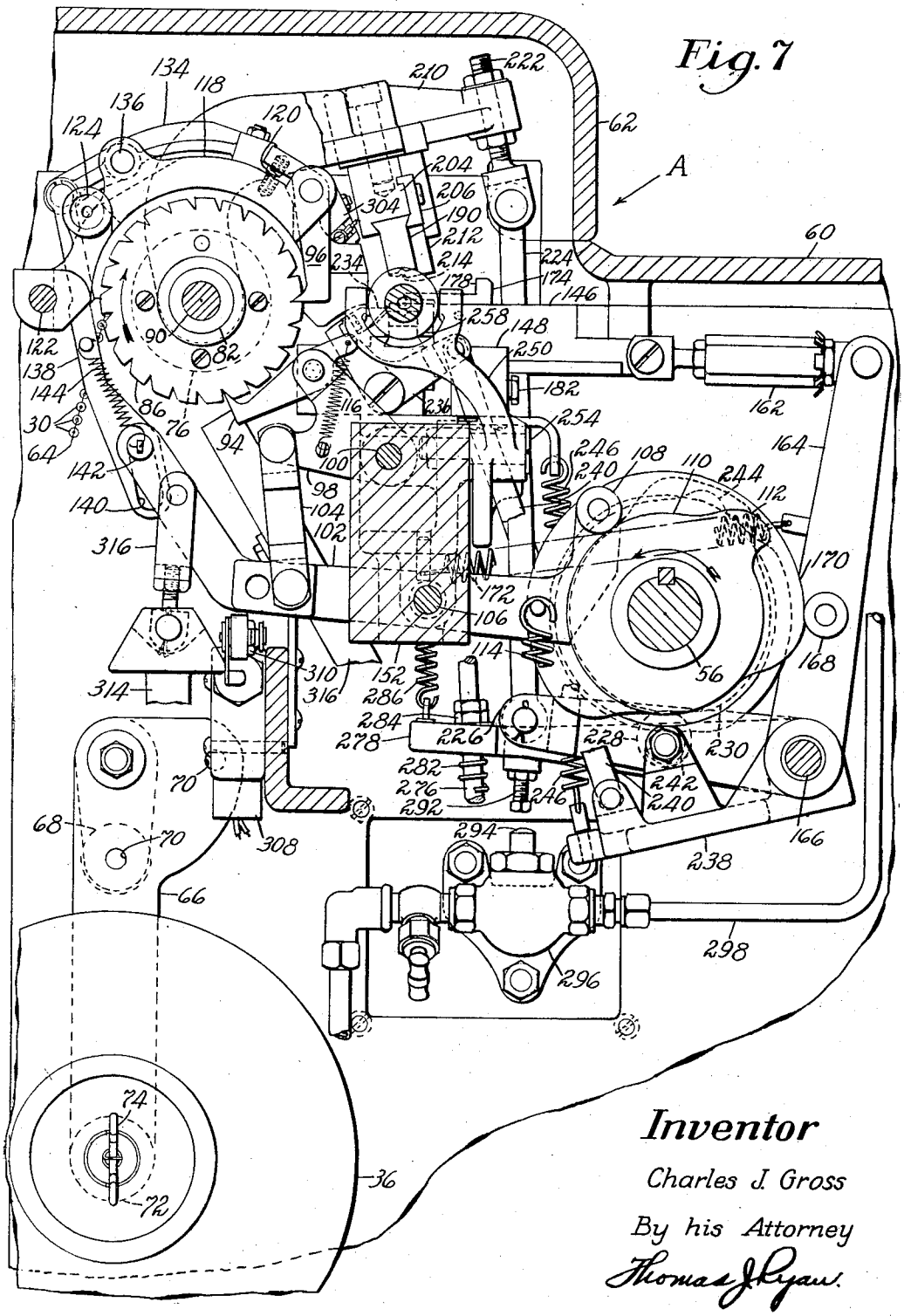

Inventor

Charles J. Gross

By his Attorney

Thomas J. Ryan

Sept. 30, 1958 C. J. GROSS 2,854,054

MACHINES FOR FEEDING BELTED AXIAL LEAD COMPONENTS TO UNBELTING, STRAIGHTENING, TRIMMING AND EJECTING STATIONS

Filed Nov. 6, 1956

15 Sheets-Sheet 5

Fig. 8

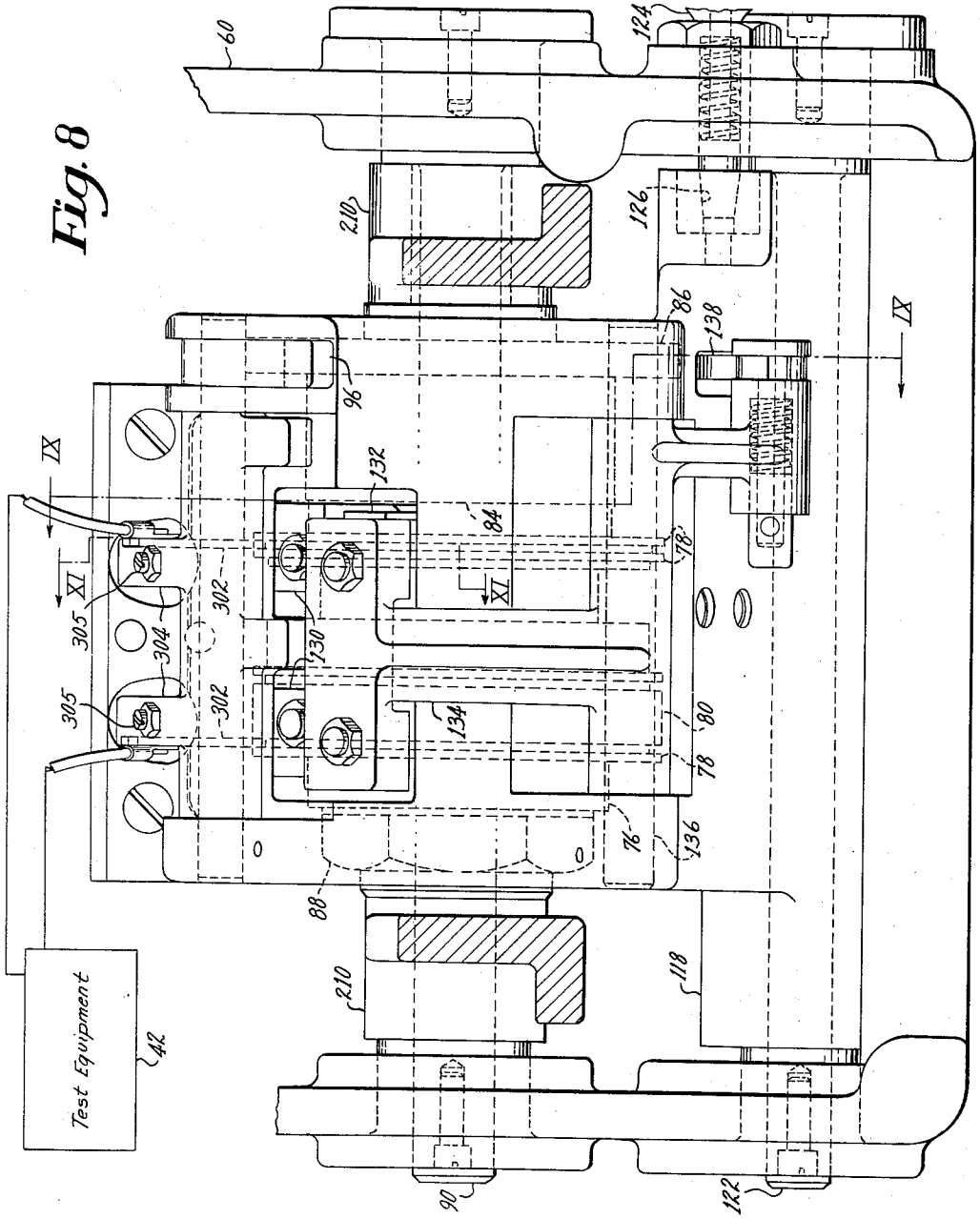

Inventor

Charles J. Gross

By his Attorney

Thomas J. Ryan

Sept. 30, 1958 C. J. GROSS 2,854,054

MACHINES FOR FEEDING BELTED AXIAL LEAD COMPONENTS TO UNBELTING, STRAIGHTENING, TRIMMING AND EJECTING STATIONS

Filed Nov. 6, 1956 15 Sheets-Sheet 6

Fig. 9

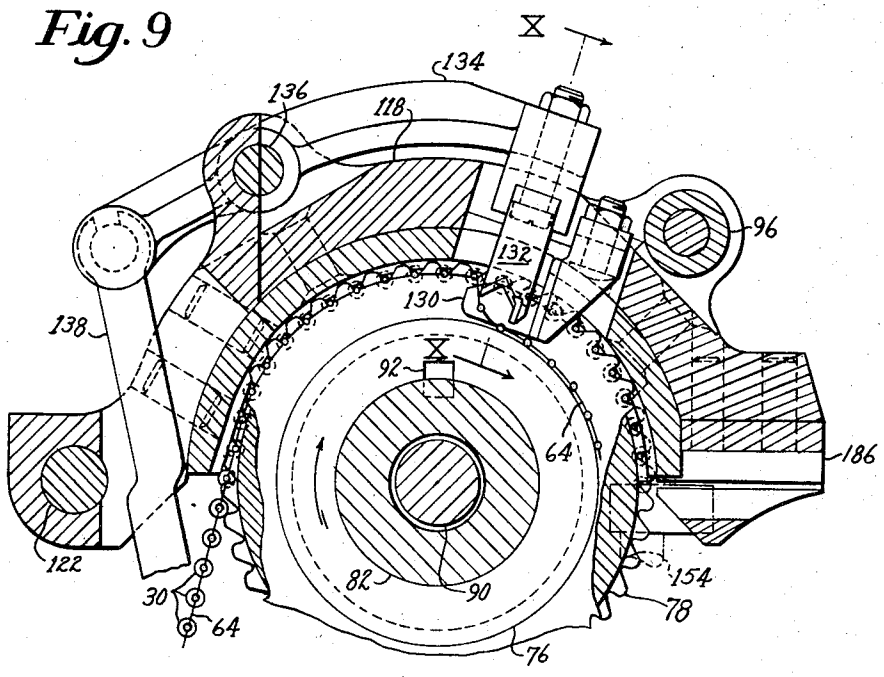

Fig. 10

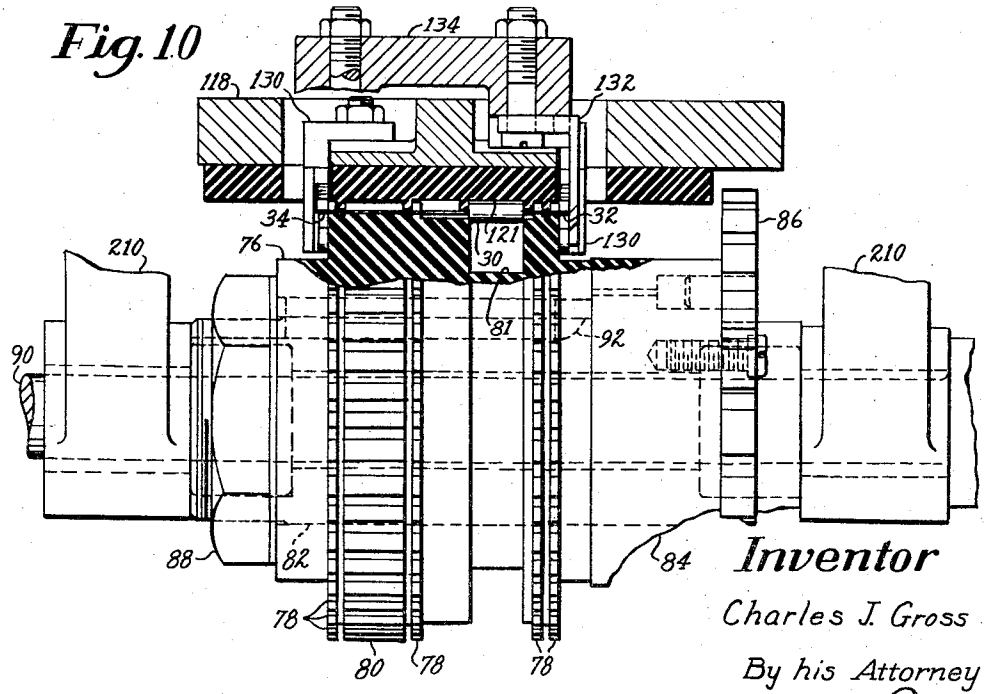

Inventor

Charles J. Gross

By his Attorney

Thomas J. Lyon

Sept. 30, 1958 C. J. GROSS 2,854,054

MACHINES FOR FEEDING BELTED AXIAL LEAD COMPONENTS TO UNBELTING, STRAIGHTENING, TRIMMING AND EJECTING STATIONS

Filed Nov. 6, 1956 15 Sheets-Sheet 7

Fig. 11

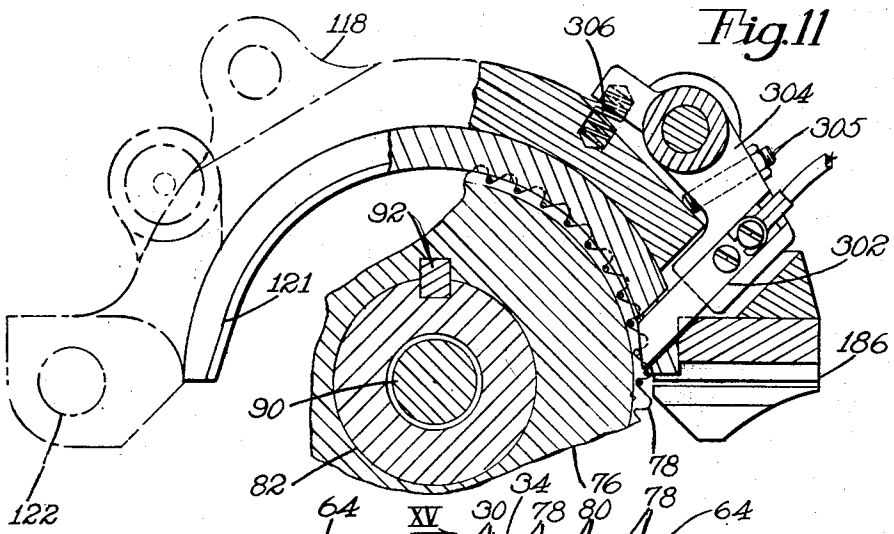

Fig. 12

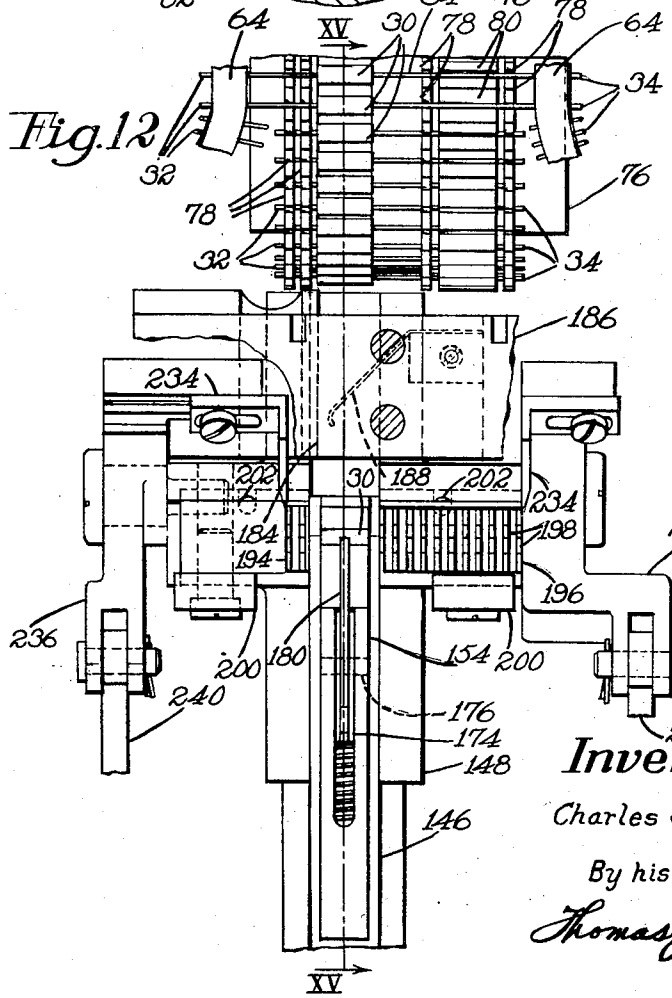

Inventor

Charles J. Gross

By his Attorney

Thomas J. Ryan

Sept. 30, 1958 C. J. GROSS 2,854,054

MACHINES FOR FEEDING BELTED AXIAL LEAD COMPONENTS TO UNBELTING, STRAIGHTENING, TRIMMING AND EJECTING STATIONS

Filed Nov. 6, 1956 15 Sheets-Sheet 8

Fig.13

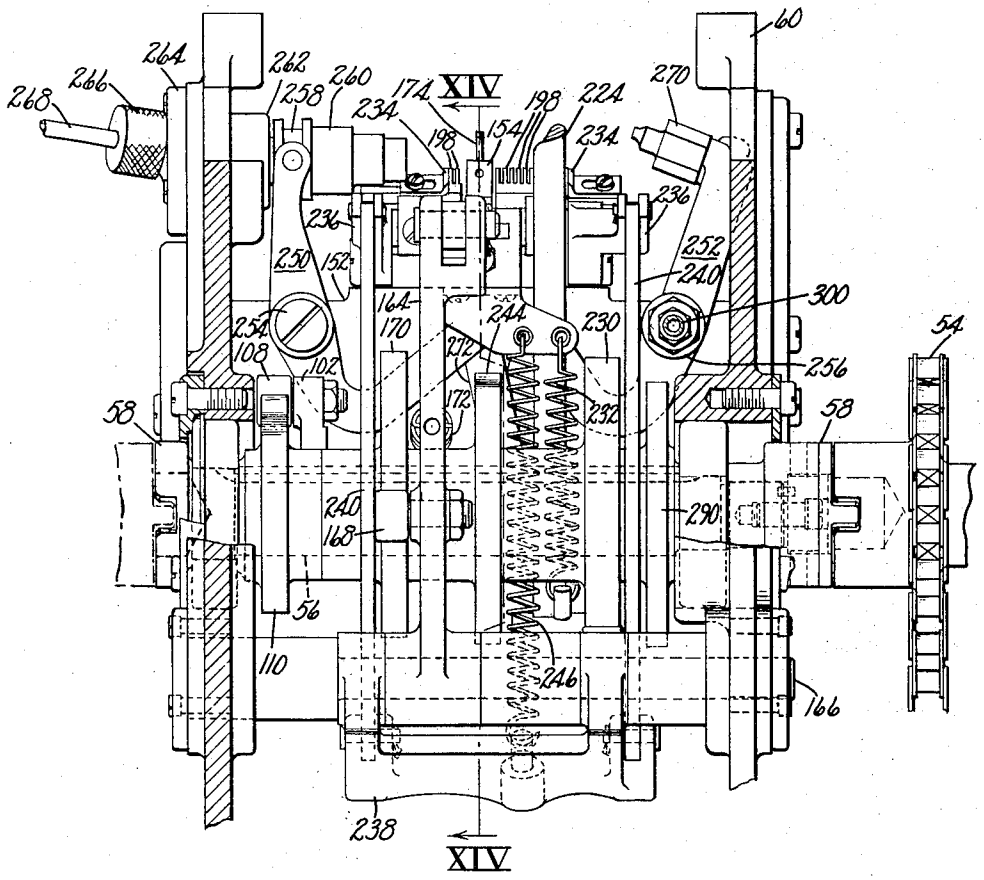

Inventor

Charles J. Gross

By his Attorney

Thomas J. Ryan

Sept. 30, 1958 C. J. GROSS 2,854,054

MACHINES FOR FEEDING BELTED AXIAL LEAD COMPONENTS TO UNBELTING, STRAIGHTENING, TRIMMING AND EJECTING STATIONS

Filed Nov. 6, 1956 15 Sheets-Sheet 9

Fig. 14

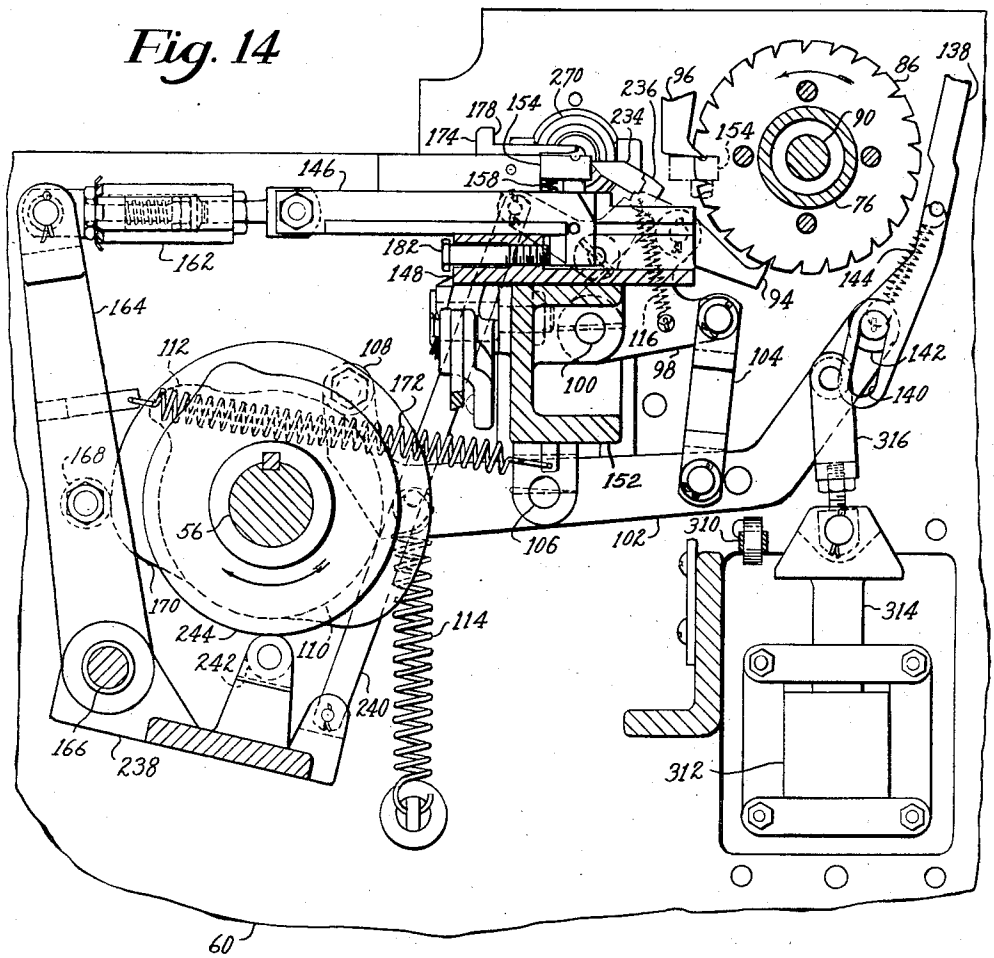

Inventor

Charles J. Gross

By his Attorney

Thomas J. Ryan

Sept. 30, 1958 C. J. GROSS 2,854,054

MACHINES FOR FEEDING BELTED AXIAL LEAD COMPONENTS TO UNBELTING, STRAIGHTENING, TRIMMING AND EJECTING STATIONS

Filed Nov. 6, 1956 15 Sheets-Sheet 10

Fig. 15

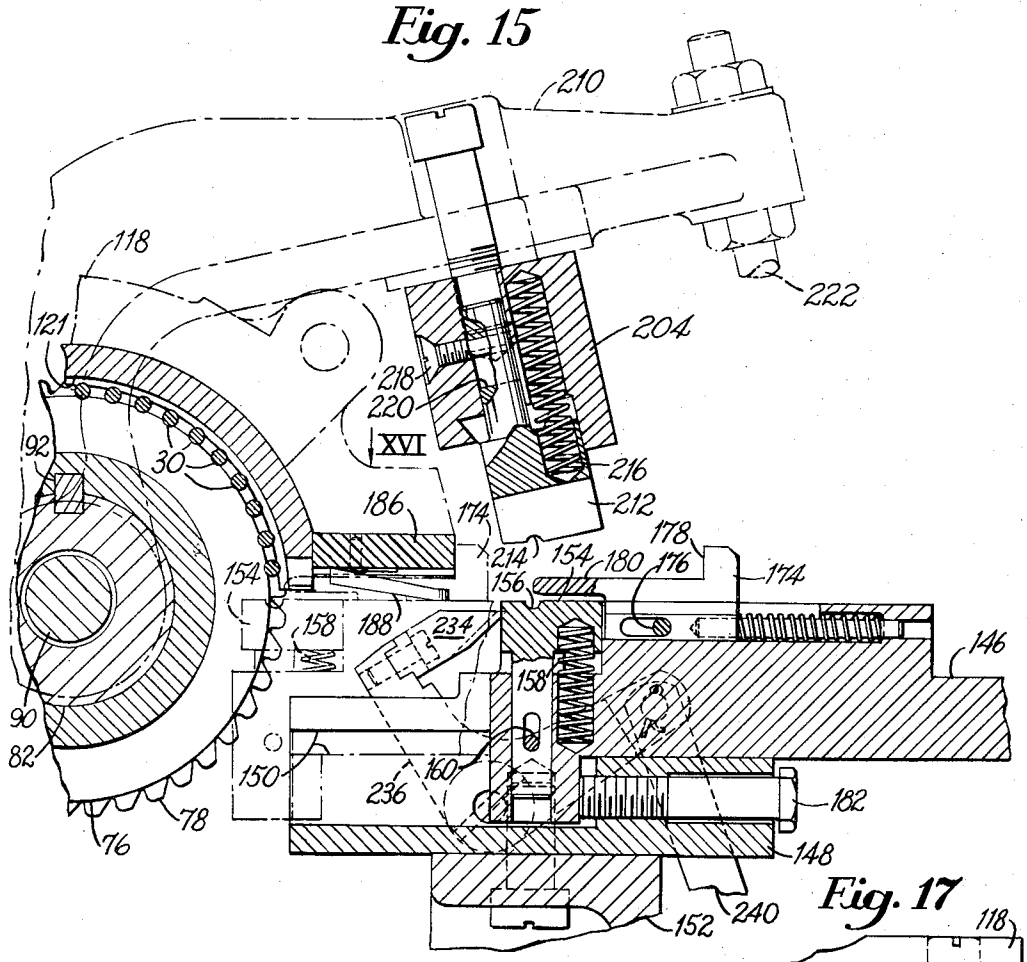

Fig. 17

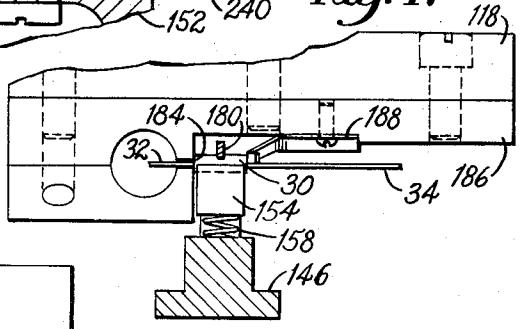

Fig. 16

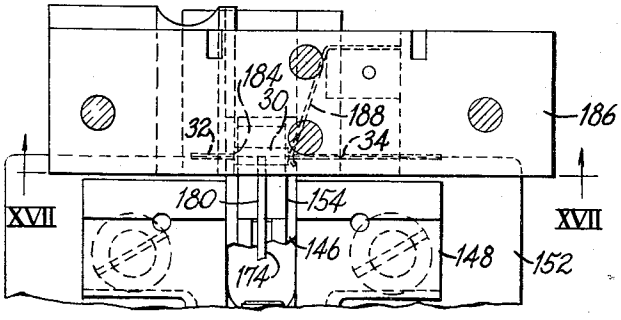

Inventor

Charles J. Gross

By his Attorney

Thomas J. Ryan

Sept. 30, 1958 C. J. GROSS 2,854,054

MACHINES FOR FEEDING BELTED AXIAL LEAD COMPONENTS TO UNBELTING, STRAIGHTENING, TRIMMING AND EJECTING STATIONS

Filed Nov. 6, 1956 15 Sheets-Sheet 11

Fig. 18

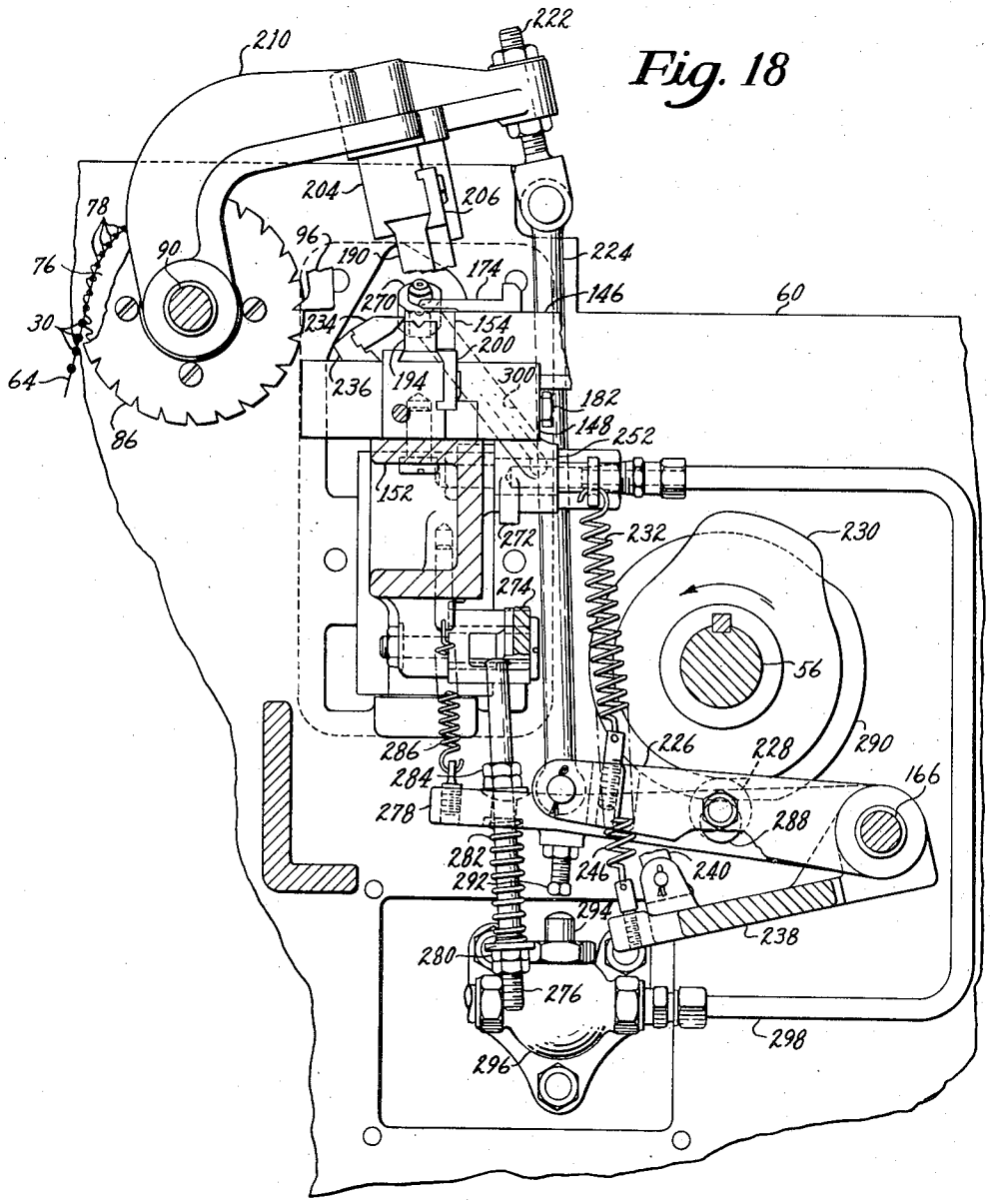

Inventor

Charles J. Gross

By his Attorney

Thomas J. Ryan

Sept. 30, 1958 C. J. GROSS 2,854,054

MACHINES FOR FEEDING BELTED AXIAL LEAD COMPONENTS TO UNBELTING, STRAIGHTENING, TRIMMING AND EJECTING STATIONS

Filed Nov. 6, 1956 15 Sheets-Sheet 12

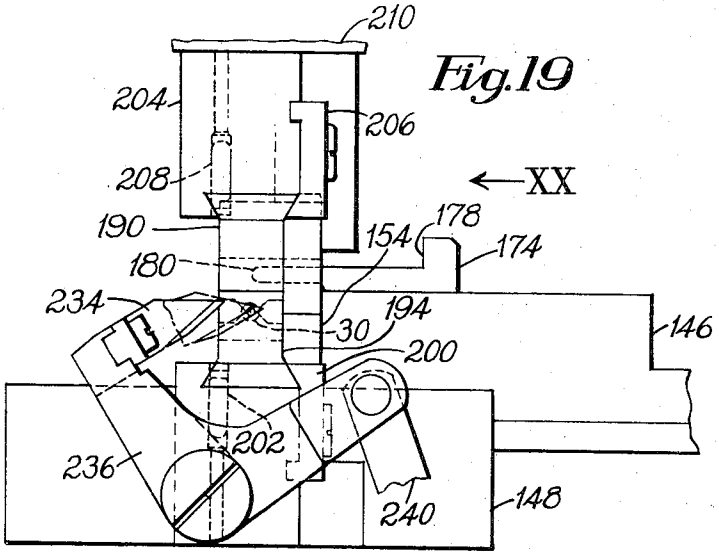

Fig. 19

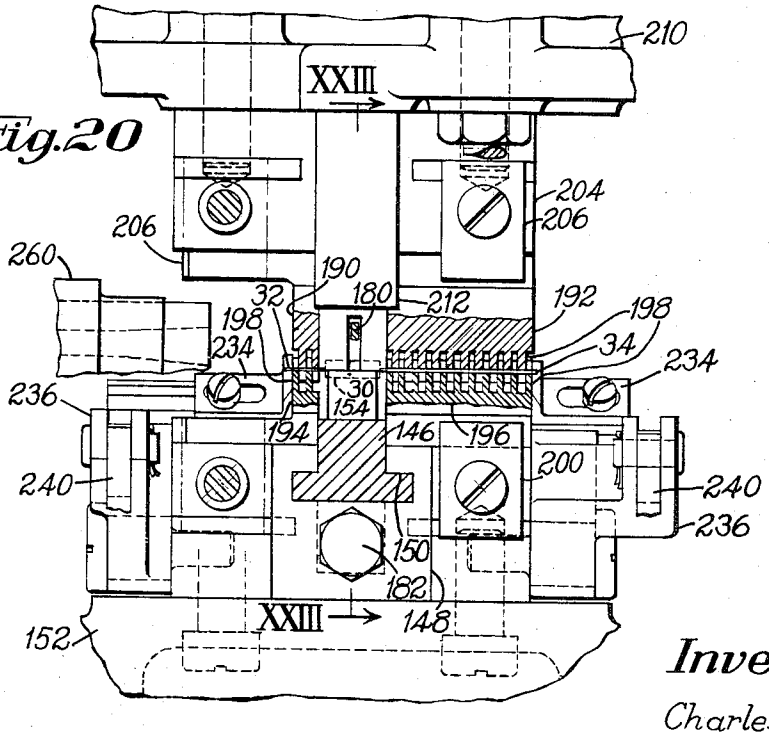

Fig. 20

Inventor

Charles J. Gross

By his Attorney

Thomas J. Ryan

Sept. 30, 1958 C. J. GROSS 2,854,054

MACHINES FOR FEEDING BELTED AXIAL LEAD COMPONENTS TO UNBELTING, STRAIGHTENING, TRIMMING AND EJECTING STATIONS

Filed Nov. 6, 1956 15 Sheets-Sheet 13

Fig. 21

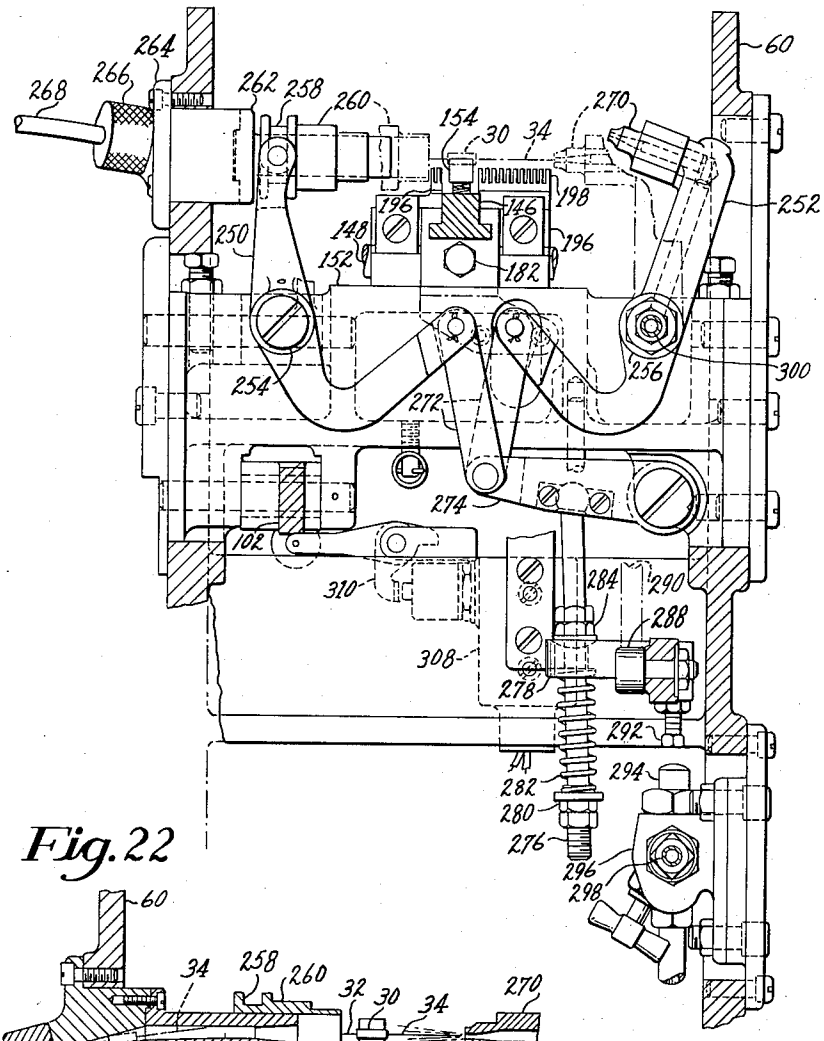

Fig. 22

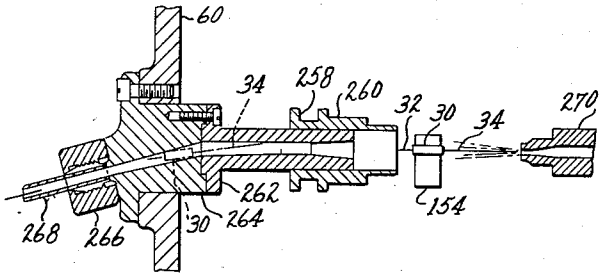

Inventor

Charles J. Gross

By his Attorney

Thomas J. Ryan

Sept. 30, 1958 C. J. GROSS 2,854,054

MACHINES FOR FEEDING BELTED AXIAL LEAD COMPONENTS TO UNBELTING, STRAIGHTENING, TRIMMING AND EJECTING STATIONS

Filed Nov. 6, 1956 15 Sheets-Sheet 14

Fig. 23

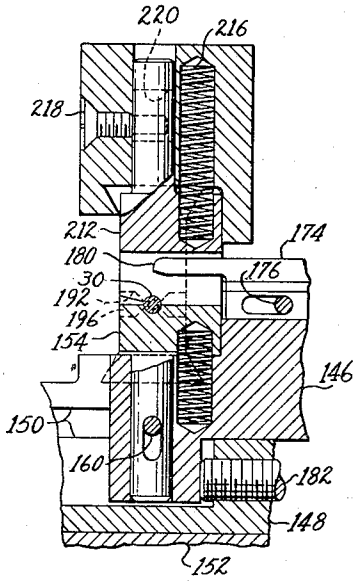

Fig. 24

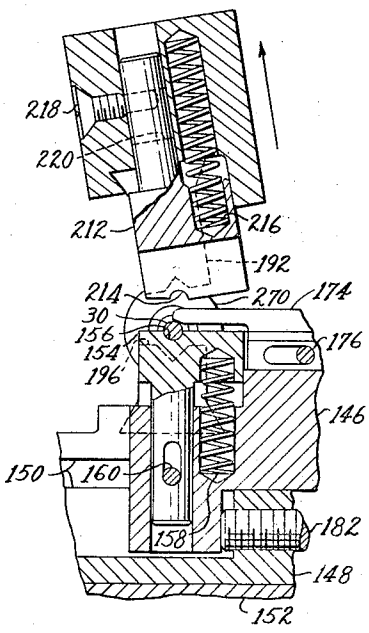

Fig. 25

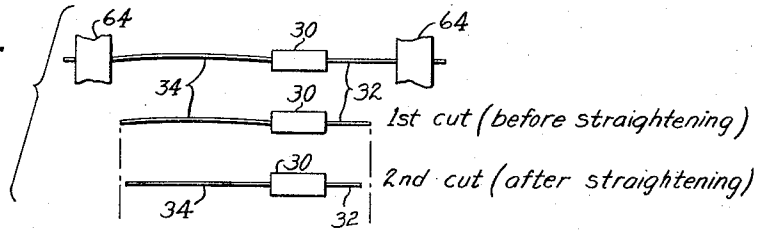

Inventor

Charles J. Gross

By his Attorney

Thomas J. Ryan

Sept. 30, 1958 C. J. GROSS 2,854,054
MACHINES FOR FEEDING BELTED AXIAL LEAD COMPONENTS
TO UNBELTING, STRAIGHTENING, TRIMMING
AND EJECTING STATIONS
Filed Nov. 6, 1956 15 Sheets-Sheet 15

Fig. 26

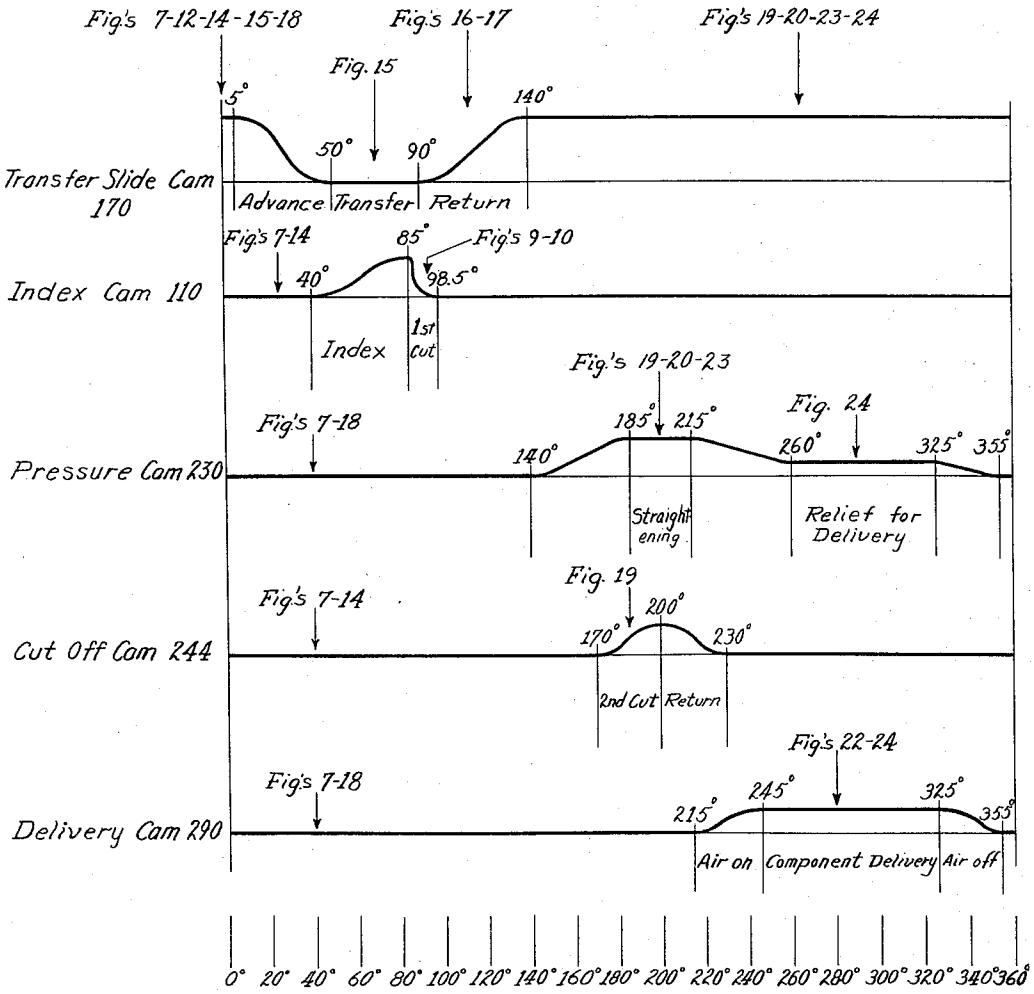

Inventor
Charles J. Gross
By his Attorney
Thomas J. Ryan

United States Patent Office 2,854,054 Patented Sept. 30, 1958

2,854,054

MACHINES FOR FEEDING BELTED AXIAL LEAD COMPONENTS TO UNBELTING, STRAIGHTENING, TRIMMING AND EJECTING STATIONS

Charles J. Gross, Winchester, Mass., assignor to United Shoe Machinery Corporation, Flemington, N. J., a corporation of New Jersey

Application November 6, 1956, Serial No. 620,670
9 Claims. (Cl. 153—39)

This invention relates to machines for processing axial lead components, and more particularly to mechanism for straightening, cutting, and delivering a plurality of belted components from their respective supply reels for application to electrical equipment. The invention is herein illustrated as applied to a series of similar operating units each of which is adaptable to process successive electronic components within a size range and having characteristic electrical functions, and it will be appreciated that the invention in its various aspects is not limited to the particular construction herein shown by way of example.

Electronic assemblages normally include a plurality of assorted components a large number of which perform different electrical functions and have dissimilar body shapes but which, prior to their connection into a circuit, were similar in that they each had a pair of leads extending axially. Because of the marked tendency for these leads, which commonly are of soft copper wire, to become bent, and the large numbers of such components which are required to be individually mounted, the components of one size and function are often belted together in a row as by tape extending across their leads or bodies and the belted components are then reeled to provide a convenient form for storage and/or to facilitate mechanical feeding by automatic means. As furnished commercially the coaxial leads of the various types of components are of a length normally greater than required neatly and effectively to complete the electrical connection in a circuit. Accordingly, whether the assemblage to be constructed includes a circuit board or is one comprising a different type of base or component holder for receiving the several components in predetermined arrangement, one or both leads of each component must ordinarily be severed to the correct length prior to installation. Upon being unbelted and cut to the appropriate length the required number of each type of component must be transferred into correct operating positions for connection in an assemblage without altering their physical or electrical characteristics except as may be intended.

In view of the foregoing it is an object of this invention to provide an improved versatile machine for processing successive groups of selected axial lead type components and then transferring them endwise into their respective operating positions in an electrical assemblage.

In accordance with this object, and as a feature of the invention, the illustrative machine comprises a series of operating heads each adapted to prepare an axial lead component for mounting, means for feeding successive components to each head, and means for pneumatically ejecting the prepared components from their respective heads to deliver the components into their assigned operating positions in an electrical assemblage.

A further feature of the invention resides more specifically in the provision, in combination in a component processing machine, of a head, means mounted in the head for unbelting successive axial lead components fed thereto, means acting on each lead of the successive unbelted components to straighten it, means for severing each straightened lead at a selected distance from its component body, a tube having its admission end adjacent to said severing means and extending to transfer each straightened and severed component from the head to an operative position in a work piece, and pneumatic means for dispatching the successive straightened components through said tube.

The above and other features of the invention, including various novel details of construction and combinations of parts, will now be more particularly described in connection with an illustrative machine in which the invention is embodied and with reference to the accompanying drawings thereof, in which:

Fig. 1 is a schematic diagram of a machine illustrative of this invention;

Fig. 2 is a view in front elevation of the major portion of the left-hand or driving end of the exemplary machine for processing axial lead components, a single operating head being shown and others not shown in detail (but similar to it) being coupled thereto in a row extending to the right as indicated in Fig. 1;

Fig. 3 is a view in front elevation and partly in vertical section of clutch mechanism shown in Fig. 2;

Fig. 4 is a section taken on line IV—IV of Fig. 3;

Fig. 5 is a section taken on the line V—V of Fig. 3;

Fig. 6 is a side view of the head shown in Fig. 2 and looking to the left in that figure;

Fig. 7 is a view similar to Fig. 6 but with the frame partly removed and portions broken away to disclose operating mechanism;

Fig. 8 is a plan view of an indexing wheel and sprocket housing shown in Fig. 7;

Fig. 9 is a section taken on the line IX—IX of Fig. 8 and showing preliminary lead cutting means;

Fig. 10 is a view partly in section taken on the line X—X of Fig. 9 and showing a component in preliminary lead cutting position;

Fig. 11 is a section taken on the line XI—XI of Fig. 8 and showing successive components being transferred into contacting relation with a probe;

Fig. 12 is a plan view of a component carrying sprocket and transfer slide shown in Figs. 8 and 11;

Fig. 13 is a section taken on the broken line XIII—XIII of Fig. 6 and showing the head operating mechanism in rest position;

Fig. 14 is a section taken on the line XIV—XIV of Fig. 13;

Fig. 15 is a section taken on the line XV—XV of Fig. 12;

Fig. 16 is a view looking in the direction of the arrow XVI in Fig. 15 and showing the transfer slide returning with a component;

Fig. 17 is a section taken on the line XVII—XVII of Fig. 16;

Fig. 18 is a view corresponding to Fig. 7 but with parts removed and showing lead straightening means and component delivering means;

Fig. 19 is a detail view of a finishing station in the head and showing the lead straightening means and final lead cutting means;

Fig. 20 is a view of the mechanism shown in Fig. 18 but looking in the direction of the arrow XX;

Fig. 21 is a section taken on the line XXI—XXI of Fig. 6 indicating a portion of the head at rest and showing pneumatic component ejection mechanism;

Fig. 22 is a horizontal section of the ejection members of the finishing station;

Fig. 23 is a section taken on the line XXIII—XXIII of Fig. 20 and illustrating the lead presser or straightening means;

Fig. 24 is a section corresponding with Fig. 23 but showing the parts after straightening a component that is ready to be delivered;

Fig. 25 is a schematic view illustrating progressively

a component when belted, when its leads are first cut before straightening, and when cut after straightening; and

Fig. 26 is a cam chart illustrating the relative timing of the several head operating parts and indicating which of the preceding figures depict the parts in particular positions.

The illustrative machine comprises a bank of component processing heads A, B, C, D, E (Fig. 1), only the left-hand one of which (as viewed in Figs. 1 and 2), generally designated A (Figs. 1, 2, 6 and 7) is shown herein in detail in view of their similarity in construction and operation. The heads are coupled in a row for simultaneous operation on their respective electronic components **30** (Figs. 2, 6, 10, 12 and 22), having axial leads **32, 34**. Each head is adapted to process its components successively when fed thereto in belted row formation from a supply reel **36** (Figs. 2, 6). Some of the heads may be adjusted to operate upon components of different body and lead size than others, and it will be understood that the number of heads employed depends on the number of components, such as resistors, capacitors, and the like, which it is desired simultaneously to process and mount in a particular electrical assemblage, the "assembly" of Fig. 1 being schematically shown as receiving five components in selected positions. The several heads are mounted upon a cabinet **38**, the lower portion of which houses, at the left-hand end as viewed in Fig. 2, a motor (not shown) for continuous operation of a drive chain **40**, and test equipment **42**. The latter forms no part of this invention, but is provided to reject components which do not measure up to standard and to trip clutch mechanism, generally designated **44** (Figs. 2, 3, and 4) that starts a machine cycle when test conditions are satisfied. The clutch **44** likewise forms no part of this invention and need not be particularly described herein, but is actuated upon receipt of a signal from the test equipment **44** by means of a solenoid **46** (Figs. 2, 3 and 4) connected thereto. The clutch is of the one-revolution type having a pair of pins **48** (Figs. 3, 4 and 5) rotatable into or out of driving relation, and accordingly a single revolution of a sprocket **50** meshing with the driver chain **40** may be caused to transmit a single complete revolution to a driven sprocket **52**. This sprocket is coupled by means of a chain **54** (Figs. 2 and 13) and sprocket coupling to a main composite cam shaft **56** (Figs. 6, 13) which extends through the bank of heads and includes Oldham couplings **58** (Figs. 1, 2) intermediate to the heads. Subsequently described sets of similar cams and connecting linkage controlled by the shaft **56** are effective to actuate the operating mechanism of each head.

The head A is largely enclosed in a rectangular frame **60** provided with a top cover **62**. Having selected the particular reel **36** of axial components to be processed by the head A, their leads being belted or flexibly connected as by tapes **64, 64**, a normally depending reel-carrying lever **66** pivoted to an inner side of the frame **60** may be swung forwardly to a re-load position, indicated in phantom in Fig. 6. A spring-backed detent **68** in the frame is biased to extend into one of two holes **70** in the lever to hold it horizontally until a bored hub of the reel is rotatably mounted or demounted with respect to a cylindrical tubular end portion **72** of the lever and then to extend into the other hole **70** to maintain the lever in a vertical operating position. For frictionally holding the reel against over-travel on the portion **72** when lowered into normal operating position, a spring or squeeze-type retaining latch **74** is inserted into the portion **72** and enables the reel easily to be removed when desired. The row of belted components is fed upwardly and over an axially bored sprocket wheel **76** (Figs. 7 and 12) of non-conducting synthetic fiber, the wheel having peripherally formed thereon a plurality of axially alined and spaced rows of teeth **78**, successive pairs of teeth being arranged and adapted to receive between them portions of a lead of a component extending between its body and a tape **64**. It will be noted (Fig. 12) that since the leads **32** are shorter than the leads **34**, the latter are engaged by an additional and wider row of sprocket teeth **80** also formed integral with the wheel **76**. This wheel is annularly recessed, as indicated at **81** (Fig. 10) to accommodate the component bodies and hold them against endwise displacement. The sprocket wheel **76** is mounted on the left-hand (as viewed in Figs. 8 and 10) end of a tubular shaft **82**, the right-hand portion of which constitutes an enlarged hub **84** having concentrically secured thereon, for reasons later explained, an index wheel **86**. The shaft **82** threadedly receives a nut **88** for clamping the sprocket wheel **76** against the hub **84** and coaxially receives a fixed shaft **90** supported in the frame **60**. Clockwise rotation of the indexing wheel **86**, as viewed in Figs. 6 and 7, by means next to be described, is transmitted to the sprocket wheel **76** by a spline **92** (Figs. 9, 10 and 11).

Indexing mechanism

For insuring that successive components being advanced between consecutive pairs of sprocket wheel teeth **78, 80** will arrive in appropriate positions in which to be operated upon by different cyclically actuated instrumentalities, these instrumentalities and the indexing wheel **86** are operated in time relation from the common, main cam shaft **56** (Figs. 6, 13). Thus, referring to Fig. 7, for obtaining appropriate rotation of the sprocket wheel **76** to provide intermittent feed and dwell of the components, cam actuated escapement means, including an indexing pawl **94** and a holding pawl **96**, is employed. The indexing pawl **94** is pivotally carried by a lever **98** which is itself fulcrumed at **100** to the frame **60**, and the lever **98** is operated by a cam lever **102** connected thereto by a link **104**. One end of the lever **102**, which is pivoted at **106** to the frame **60**, carries a roll **108** that is arranged to cooperate with an indexing cam **110** (Figs. 7 and 13) secured on the shaft **56** and having a single salient **112**. A tension spring **114** (Fig. 7) connecting the lever **102** with the frame **60**, normally maintains operative engagement between the roll **108** and the cam **110**, and a tension spring **116** connecting an end of the pawl **94** with the lever **98** urges the opposite end of that pawl into engagement with the consecutive, biased teeth peripherally formed on the indexing wheel. The holding pawl **96** is pivotally mounted in an indexing wheel and sprocket wheel housing **118**, and has a lower, acute end shaped to mesh with the successive indexing wheel teeth to hold them against counterclockwise movement, as viewed in Fig. 7. This pawl end is yieldingly held in such engagement by means of a compression spring **120** engaging endwise the opposite end of the pawl and seated in a recess formed in the housing **118**. The latter is a composite unit normally disposed so that its under surface is substantially concentric with, and closely adjacent to, the sprocket wheel **76**, and includes a formed insert provided with an arcuate recess **121** (Fig. 11) for accommodating upper halves of the row of component bodies being fed. To permit easy access for inspection, adjustment, or substitution of parts, the housing **118** is pivotally supported on a rod **122** (Figs. 2, 7, 8, and 9) journaled transversely in the front of the frame **60**. A spring-backed plunger **124** (Fig. 8) retractably extending through the frame **60** and serving normally to support the housing in operative position is withdrawn endwise from its receiving bore **126** in the housing to permit it to be elevated upon removal of the top cover **62**. It will be understood from the foregoing that each single revolution of the indexing cam **110** operates through the linkage described positively to cause the pawl **94** to advance the sprocket wheel **76**, and hence the plurality of components carried thereby, by the amount of the pitch of the indexing wheel teeth, and then permits the components to dwell in that interval in which the pawl **94** is retracted to the right as viewed in Fig. 7.

Preliminary lead cutting means

In order to separate or strip the successive belted components from the tapes **64**, preliminary lead cutting means (Figs. 7 and 9) is provided to operate on each successive component in one of its positions of dwell. As clearly shown in Figs. 9 and 10, there is bolted to an end of the housing **118** a pair of fixed lead shearing anvils **130**, **130** arranged to cooperate respectively with a pair of V-notched knives **132**, **132** which are carried heightwise to and from their operating positions by means of a lever **134** fulcrumed at **136** on the housing **118**. The lever **134** is actuated at appropriate intervals by a link **138** the lower end of which is formed with a lost-motion slot **140** (Fig. 7) for slidably receiving a pin **142** fixed in the pawl operating lever **102**. In their normal, or rest positions the knives **132** are in engagement with the shearing anvils. Accordingly, upon rapid descent of the roll **108** from the salient **112**, as effected by the spring **114**, the link **138** is forced upwardly by means of the pin **142** in the lever **102** to cause the knives **132** to slide on the confronting end surfaces of anvils **130** to sever the leads of a component. A tension spring **144**, connecting the pin **142** and the link **138**, operates during indexing to raise the knives **132** preparatory to severing the leads of the next component.

Component transfer mechanism

Means is provided for removing successive components from a pick-off point on the sprocket wheel which is on a horizontal with its axis. Referring to Figs. 15 and 26, just prior to indexing the wheel **76** by the means described a T-shaped transfer slide **146** is advanced toward the pickoff position. The slide **146** is mounted for horizontal reciprocable movement on a block **148** having a guideway **150** (Figs. 15, 20) for receiving a tongue of the slide. The block **148** is secured on a U-shaped supporting bracket **152** bridging the frame **60**. A carrier block **154**, having a groove **156** adapted to accommodate the lower half of a component body, is provided with a depending stem that is slidable vertically in a bore formed in the transfer slide **146**. The block **154** is yieldingly urged upwardly by a compression spring **158** seated in the transfer slide, the heightwise limits of movement of the block **154** being determined by a pin **160** fixed in the slide **146** and extending through a vertical slot in the block stem. For controlling movement of the slide **146**, the latter is connected to one end of an extensible link **162** (Figs. 7 and 14), which is connected at its other end to a lever **164** fulcrumed on a fixed shaft **166** secured in the frame **60**. The lever **164** carries a roll **168** which is held in cooperative engagement with a cam **170** fixed on the shaft **56** by means of a tension spring **172** (Fig. 7), the latter connecting the lever **164** with a pin in the bracket **152**. The carrier block groove **156** is thus brought into component receiving position, shown in phantom in Fig. 15, just as indexing is about to commence. A spring-backed retainer **174** is slidably mounted on the slide **146**, a pin **176** fixed in the latter extending through a slot in the retainer to limit its horizontal movement. A shoulder **178** on the retainer is arranged to engage the housing **118** in the course of the advance of the slide **146** toward the component receiving position, thus causing an arm **180** of the retainer to uncover the groove **156**. Upon being indexed, the sprocket wheel **76** delivers a component into the waiting groove **156**, and the carrier block **154** is then retracted by operation of the cam **170** and the cooperating linkage described, the arm **180** insuring that the component does not escape from the groove. An adjustable stop screw **182** (Fig. 15), threaded into the block **148**, determines the limit of retraction of the carrier block **154** as appropriate for different sizes of components. In the course of retraction, each component is positioned endwise by an end gage **184** formed on a plate **186** (Figs. 15–17) secured to the housing **118**, a leaf spring **188** affixed to the plate being arranged to urge each component body against the end gage **184**. The plate **186** is suitably slotted to accommodate the leads of the components.

Lead straightening means

Upon return of the slide **146** to the rest position determined by the stop screw **182** (Fig. 15), the component occupies a dwell position for the balance of the cam shaft cycle. Referring to Fig. 26, the component is to be operated upon sequentially in the dwell by means of lead straightening mechanism, final lead severing means, and ejection or component delivering means. The straightening mechanism consists of alined upper combs **190**, **192** (Figs. 20, 23 and 24) which cooperate, respectively, with alined lower combs **194**, **196**. Each of these combs is formed with a row of vertical extending fingers **198** having V-notched ends and which are caused to be interdigitated so that upon cooperation of the combs the leads of a component are forced to lie on an axis coinciding with that of the component body. For a reason later to be made clear, it is to be noted that the spring **158** is normally effective to maintain the component, when free and exposed on the carrier block **154**, at a level slightly above the fingers **198** of the lower combs **194**, **196**, but yields during lead straightening to the limit determined by the pin **160** (compare Figs. 23, 24). The combs **194**, **196** are respectively mounted in a dovetail fashion on the transfer slide block **146** by means of a gib or anchoring plate **200** screwed thereto. Pins **202**, **202** (Figs. 12 and 19) respectively mounted in bores in the block **146**, register the combs respectively thereon. In like manner, the combs **190**, **192** are respectively secured to a block **204** by means of a clamping plate **206** screwed thereto and are registered respectively on the block by pins **208**, **208** (one shown in Fig. 19). The block **204** (Figs. 15 and 20) is bolted to a yoke **210** which is fulcrumed on the shaft **90**. As indicated in Fig. 7, the yoke **210** normally supports the upper combs **190**, **192** in an elevated or inoperative position. Slidably mounted in a vertical bore formed in the block **204** (Fig. 15) is the stem of a body block **212** arranged to cooperate with the retracted carrier block **154** and having a groove **214** formed to complement the groove **156** in protectively enclosing and securing and component body during lead straightening, as indicated in Fig. 23. Similar to the mounting of the carrier block **154**, a compression spring **216**, one end of which is seated in a bore formed in the block **204**, urges the body block **212** toward the carrier block to the extent permitted by a screw **218** threaded into the block **204** and extending into a slot **220** formed in the mentioned stem of the body block.

In order to lower the upper combs **190**, **192** into their straightening positions at the proper time in the machine cycle, an end of the yoke **210** threadedly receives a stud **222** (Fig. 18) having pivotal connection with the upper end of a link **224**, the lower end of which is pivotally connected to one end of an operating lever **226**. The other end of this lever is fulcrumed on the shaft **166**. A follower roll **228** mounted on the lever **226** is yieldingly maintained in cooperation with a presser cam **230** keyed to the main cam shaft **56** by means of a tension spring **232** which connects the lever **226** with a projection (Figs. 13 and 18) secured to the supporting bracket **152**. Accordingly, the salient of the cam **230** operates to pivot the yoke **210** clockwise, as viewed in Figs. 7, 15 and 18, and causes the component body yieldingly to be clamped between the carrier block **154** and the body block **212**, while the fingers **198** cooperate to confine the oppositely extending leads to a straight line coinciding with the axis of the component body. As shown in Fig. 26, this lead pressing and straightening action occurs from approximately 185° to 215° of the cam cycle, the component subsequently being released from the upper combs **190**, **192** and the body block **212** being raised as indicated in

Fig. 24 by the further operation of the cycle of the presser cam **230**.

Final lead cutting means

At about the middle of the interval in which lead straightening is occurring, means are actuated to sever both of the leads of the component to precise lengths as needed for its particular installation. In some assembly work this second lead cutting may be omitted (the initial lead trimming being considered sufficiently accurate), and then, of course, the parts otherwise operative for further severing may be omitted from the machine or made inoperative. Referring primarily to Figs. 7, 13, 14, 19, and 20, a pair of beveled V-shaped knives **234**, **234** is disposed to be moved into shearing relation with the outer faces, respectively, of the lower combs **194**, **196**, as indicated in Fig. 20. Each of these knives is adjustably secured by screw-and-slot connection to corresponding ends of bell-crank levers **236** which are respectively pivotally mounted on opposite ends of the block **148**. Accordingly, for simultaneously actuating the knives **234**, the other ends of the levers **236** are respectively connected to parallel arms of a yoke **238** by means of links **240**, **240**. The yoke **238** is fulcrumed on the shaft **166** and carries a roll **242** for cooperative engagement with a cut-off cam **244**, such engagement being yieldingly maintained by a tension spring **246** connecting an end of the yoke **238** with the same projection of the bracket **152** to which spring **232** is connected. The cut-off cam **244** is keyed on the main cam shaft **56**.

Component delivering means

With the component leads straightened and precisely cut, and the straightening and severing means, as well as the body block **212**, cleared from engagement with the component, as shown in Fig. 24, the component is supported on the carrier block **154** in an exact position in readiness to be delivered for installation in its assigned position in an electrical assemblage. For this purpose, an air ejection system is applied to the component in the last portion of the machine cycle in the manner now to be explained. Referring to Figs. 13, 21, and 22, a pair of equalizer levers **250**, **252** is pivotally mounted at **254**, **256**, respectively, on the supporting bracket **152**, the upper end of the lever **250** having trunnion engagement with an annular slot **258** formed in an outlet or receiving nozzle **260**. The latter is disposed to have its axis coincide with that of the straightened component, and is arranged for movement toward and from telescoping relation with the component (preferably the shorter lead end thereof), being slidably mounted on a sleeve **262** secured to a tubular coupling **264** (Fig. 22) affixed to the frame **60**. An adapter **266** threaded onto the coupling receives a flexible delivery tube **268**, preferably of transparent plastic, which is thus in communication with the receiving nozzle **260**, and extends to guide and deliver the component endwise to a lead forming station, if necessary, or otherwise directly into its selected or intended operating position on a chassis or in a component holder. The upper end of the lever **252** is provided with an inlet or ejecting nozzle **270** that is arranged to be moved into axial alinement with the component, both nozzles being thus moved by means next to be described. The lower ends of the levers **250**, **252** are respectively connected by links **272**, **272** (Fig. 21) to one end of a lever **274** which is pivoted at its other end on the bracket **152**. For actuating the lever **274**, a rod **276** having ball and socket connection therewith is moved endwise by reason of its association with a cam lever **278** (Figs. 18 and 21). The rod **276** slidably extends through a bore formed in the lever **278** and is threaded at its lower end to carry a nut **280**. This nut engages one end of a loaded return spring **282** that is thus adjustably forced yieldingly to bear endwise against the cam lever **278** to urge it upwardly against a stop nut **284** on the rod **276**. A tension spring **286** (Figs. 7, 18) connecting the bracket **152** and the lever **278** maintains a roll **288** (Figs. 18, 21) on the lever in cooperative engagement with a delivery cam **290** fast on the cam shaft **56**. The arrangement is accordingly such that when the salient portion of the cam **290** is effective to swing the nozzles **260**, **270** simultaneously into their operating positions closely adjacent to the component and against the resistance of the spring **282** by pivoting the lever **278** counterclockwise as viewed in Fig. 18, a stud **292** threaded into the lever **278** is depressed yieldingly to actuate a switch **294** which thereupon acts to open a normally closed valve **296**. This valve is coupled to a tube **298** communicating with a bore **300** in the lever **252**, the bore **300** in turn communicating with the ejector nozzle **270**. Since the tube **298** is effectively connected with a suitable source of air under pressure (not shown), upon operation of the valve **296**, a blast of air is discharged from the nozzle **270** and directed upon the component to eject it from the machine via the tube **268**. Upon delivery of the component, the roll **288** now being permitted by the cam **290** to rise, the loaded spring **282** is effective to urge the lever **274** clockwise, as viewed in Fig. 21, and hence the air discharged is cut off and the nozzles are returned to their inoperative positions.

Cooperation with component testing means

It has been assumed above that the components being prepared and delivered as described were satisfactory from an electrical standpoint. The component test equipment **42** (Fig. 2) may be of any suitable type adapted to determine and pass upon the acceptability of the particular components being processed. As above indicated, when a component satisfies test conditions the clutch **44** is effective through the solenoid **46** to turn the entire composite cam shaft **56** through a single revolution, thus operating the bank of machine heads simultaneously. The test equipment is electrically connected to a pair of probes **302**, **302** (Figs. 8 and 11), respectively mounted in levers **304**, **304** pivotally carried by the housing **118**, the lower ends of the probes preferably being arranged to be engaged by the leads of a component adjacent to the teeth **78** and at its dwell point just preceding the pick-off or transfer point above mentioned. It will accordingly be observed that as a component is being tested the transfer slide **146** is fully retracted from the sprocket wheel **76**. Each probe has the lower limit of its lead engaging position (normally set to clear the lands on the sprocket wheel by one-half the lead diameter) adjustably determined by a stop screw **305** threaded in a lever **304** and abutting the housing **118** endwise, the probes being yieldingly urged into such positions by compression springs **306** seated in the housing **118** and engaging the levers **304** respectively. In order that the test equipment may be conditioned to make a test when the component has been indexed into testing position, a microswitch **308** (Figs. 2, 7, and 21) is arranged on a bracket in the frame **60** and disposed to be actuated by a roll carrying lever **310**, the latter being caused to be pivoted by the indexing lever **102**. If the component fails to satisfy the test standards, the test equipment **42** operates to energize a solenoid **312** (Figs. 2 and 14). Consequently, while the slide **146** remains in retracted position in its cycle, a plunger **314** (Figs. 7, 14) of the solenoid **312** acts to pull downwardly a link **316** connected to the lever **102** and thus causes the wheel **76** and this tested component (which has been once indexed by the usual cam means heretofore described into pick-off position) to be re-indexed by means of the pawl **94** as controlled by the solenoid-pivoted lever **102**, the link **104**, and the lever **98**. As a result, the unsatisfactory component is allowed to be conveyed by the wheel **76** to a chute **316** (Figs. 2, 6 and 7) for dumping, along with waste tape and lead ends, into a pan **318**, both chute and pan being mounted on the frame **60**, and the succeeding component is tested. The arrangement is such that during the retraction dwell

of the slide 146 as many as three components may be tested, and if found to be unsatisfactory, the solenoid 46 is automatically prevented from actuating the clutch until the situation has been examined.

From the foregoing description of the operating cycle of one machine head and its control means it will be apparent that the heads A, B, C, D, and E or any number of similar heads as required for assemblage of a required number of different components may be coupled to provide a reliable machine for simultaneously processing and rapidly delivering axial lead components into selected positions.

Having thus described my invention, what I claim as new and desire to secure by Letters Patent of the United States is:

1. A machine for processing belted components having coaxial leads comprising a rotary sprocket wheel engageable with the leads of consecutive belted components to space them in a row, means for removing the components from their belting as they are advanced by the wheel, means for indexing the wheel to deposit successive components on a carrier movable relatively thereto, means for moving the carrier in time relation to said indexing means to transfer the successive components to a lead straightening position, lead straightening means operable upon arrival of a component in said position, a tube for delivering each component endwise from said straightening position to a selected position upon straightening of its leads, and a pneumatic ejector nozzle mounted adjacent to said straightening position, said tube being arranged to receive the component upon operation of said nozzle.

2. Apparatus for processing coaxial lead components comprising a machine head, sprocket means in the head engageable with a plurality of belted components and their leads, said sprocket means being rotatable to advance the components successively in row formation, means for operating said sprocket means intermittently, means mounted on the head and operative to unbelt the components consecutively while engaged by the sprocket and before reaching a transfer point spaced circumferentially thereof, a carrier mounted for cooperation with said sprocket means and movable to transfer successive components from said point, lead straightening means mounted in the head for engagement with the leads of each component on said carrier when the latter is moved to a lead straightening zone, and means for ejecting the successive components from the head and in a prescribed path upon disengagement of the lead straightening means from the components.

3. In a machine for processing axial lead components, lead straightening means including teeth arranged to act yieldingly within limits on the leads of successive components, a movable carrier for supporting each component by its body during operation of said lead straightening means on its leads, means acting on said carrier to support a component when straightened on an axis such that its body and leads are clear of said lead straightening means, and pneumatic ejection means operable to dispatch the straightened component along said axis.

4. Apparatus for processing axial components comprising a machine head, a sprocket wheel rotatably mounted therein having teeth adapted to engage a plurality of components spaced in row formation, means for operating said wheel to advance the components consecutively to a transfer point, a movable carrier mounted in said head and formed and arranged for receiving each component at said point and transferring it to a lead straightening zone, means mounted in said head and operable upon arrival of the carrier in said zone for straightening the leads of the component thereon, means operable in the course of the operation of said lead straightening means for severing the leads to selected lengths, and means thereafter operable to eject the processed component endwise from the head for delivery through a tube to a selected point.

5. Apparatus as set forth in claim 4 and further characterized in that said apparatus is provided with a cam shaft and a single-revolution clutch for operating it, said wheel operating means, carrier, lead straightening and severing means, and ejecting means being cyclically operated in time relation by connections including cams cooperative with said shaft.

6. Apparatus as set forth in claim 5 and further characterized in that a plurality of said heads are arranged in a row and individually adaptable to process axial lead components having different dimensions and electrical characteristics, the cam shafts of said heads being coupled to effect synchronous delivery of the different components via their respective tubes.

7. Apparatus for processing components having axial leads comprising a head, means mounted in the head for feeding the components in belted relation and consecutively over a fixed path, means mounted in the head for severing the leads of successive components to unbelt them in the course of their travel, reciprocable means for carrying each unbelted component from a point in said path to a lead straightening zone, mechanism at said zone including lead straightening means operable to close automatically upon the leads of each component on the carrying means to cause them to coincide with the axis of the component body, means for trimming said leads as they are being straightened, means for ejecting each trimmed component from the head and along a selected path, and cam means for operating said carrying means in time relation to said feeding means and in time relation to the straightening means.

8. A machine for processing components comprising, a frame, a carrier movably mounted thereon and adapted to present the bodies of successive axial lead components to a lead straightening zone and then retract therefrom, a shaft rotatably mounted in the frame and having operative connection with the carrier, a pair of cooperative straightening tools mounted on the frame for movement into and out of the lead straightening zone, and cam means controlled by said shaft and operatively connected to said tools to cause them simultaneously to engage the leads of a component on the carrier and press them transversely into coaxial alinement with the axis of the body of said component.

9. In a component processing machine, a movable carrier formed to receive and support successive axial lead components by engagement with their bodies, a pair of cooperative straightening tools mounted for relative movement into and out of transverse engagement with each of the leads of a component on said carrier to press said leads into coaxial alinement, cyclic means for moving the carrier to position an axis of the component thereon in predetermined relation to said tools, means for automatically operating said tools when the carrier has thus positioned the component axis, a knife mounted for movement transversely of a lead of a component on said carrier, said knife being disposed to cooperate with a surface of one of said straightening tools to sever the lead, and power means for operating said knife while said lead is being held straightened by the tool.

References Cited in the file of this patent

UNITED STATES PATENTS

1,361,513	Altman	Dec. 7, 1920
1,870,584	Ostrom	Aug. 9, 1932
1,910,687	Freeburg	May 23, 1933
2,132,242	Lundeen	Oct. 4, 1938
2,290,673	Cole	July 21, 1942
2,650,415	Kingman	Sept. 1, 1953
2,713,362	Stahl	July 19, 1955
2,771,206	Daniels	Nov. 20, 1956
2,772,416	Dorosz	Dec. 4, 1956

FOREIGN PATENTS

83,552	Switzerland	May 1, 1920