US 20020011923A1

(19) United States

(12) Patent Application Publication (10) Pub. No.: US 2002/0011923 A1

Cunningham et al. (43) Pub. Date: Jan. 31, 2002

(54) APPLIANCE COMMUNICATION AND CONTROL SYSTEM AND APPLIANCE FOR USE IN SAME

(75) Inventors: **Glen Cunningham**, Rockport, MA (US); **Ken Parker**, Atlanta, GA (US); **Tim E. Woods**, Novi, MI (US); **Stephen J. Zwonitzer**, Atlanta, GA (US); **Evan T. Ward**, Chicago, IL (US); **Maureen E. Carroll**, Atlantia, GA (US); **John Hamann**, Delray Beach, FL (US); **JoAnne Lala**, Delray Beach, FL (US); **Lily Kunz**, Darien, IL (US); **Mike Swieboda**, Napeville, IL (US); **Mark Devine**, Napeville, IL (US); **Jim Montagnino**, St Charles, IL (US)

Correspondence Address:
Jonathan S Caplan Esq
Kramer Levin Naftalis & Frankel LLP
919 Third Avenue
New York, NY 10022 (US)

(73) Assignee: **THALIA PRODUCTS, INC.**

(*) Notice: This is a publication of a continued prosecution application (CPA) filed under 37 CFR 1.53(d).

(21) Appl. No.: **09/482,789**

(22) Filed: **Jan. 13, 2000**

Publication Classification

(51) **Int. Cl.**[7] **H04M 11/04**

(52) **U.S. Cl.** **340/310.01**

(57) **ABSTRACT**

A system of intelligent appliances coupled by common household power lines or wireless links. One or more of the appliances serves as a system controller and may include a further communications interface for coupling to an external communications network, such as the telephone network. The system can thus be accessed and controlled remotely. The system can also communicate with and obtain information from remote sources such as Internet-based facilities.

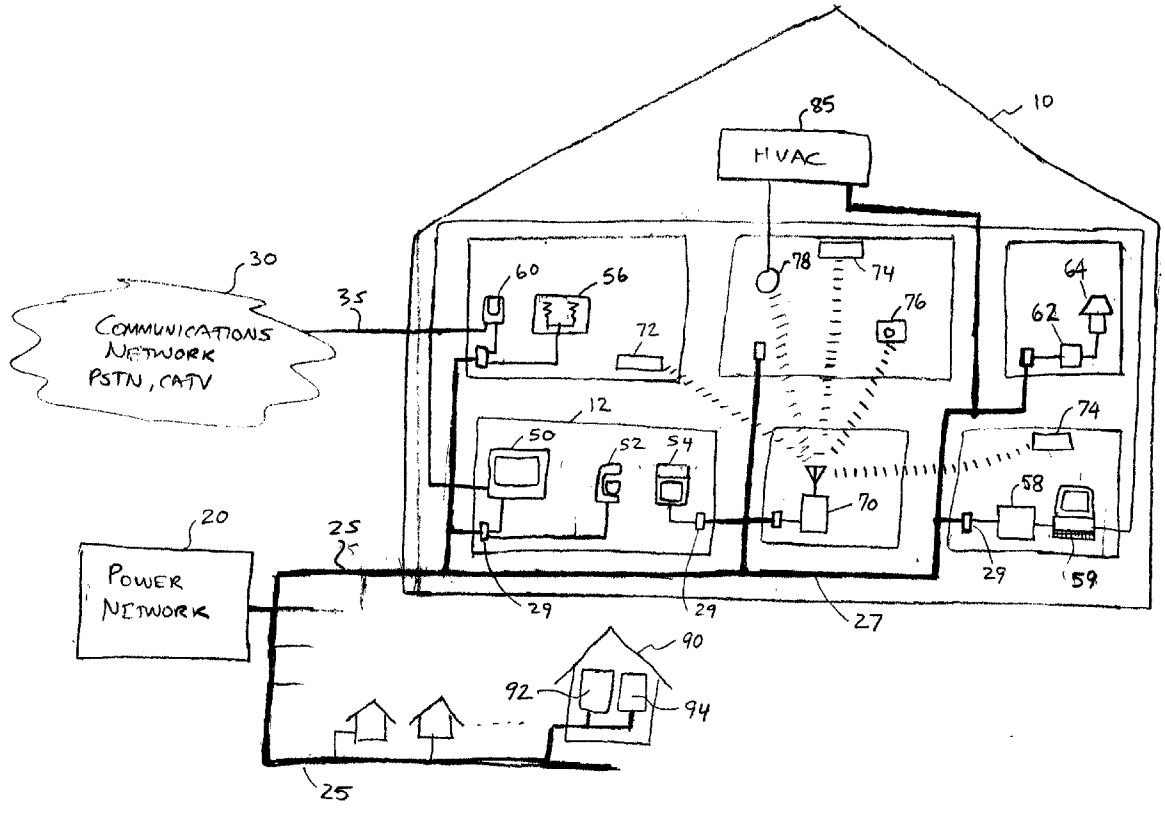

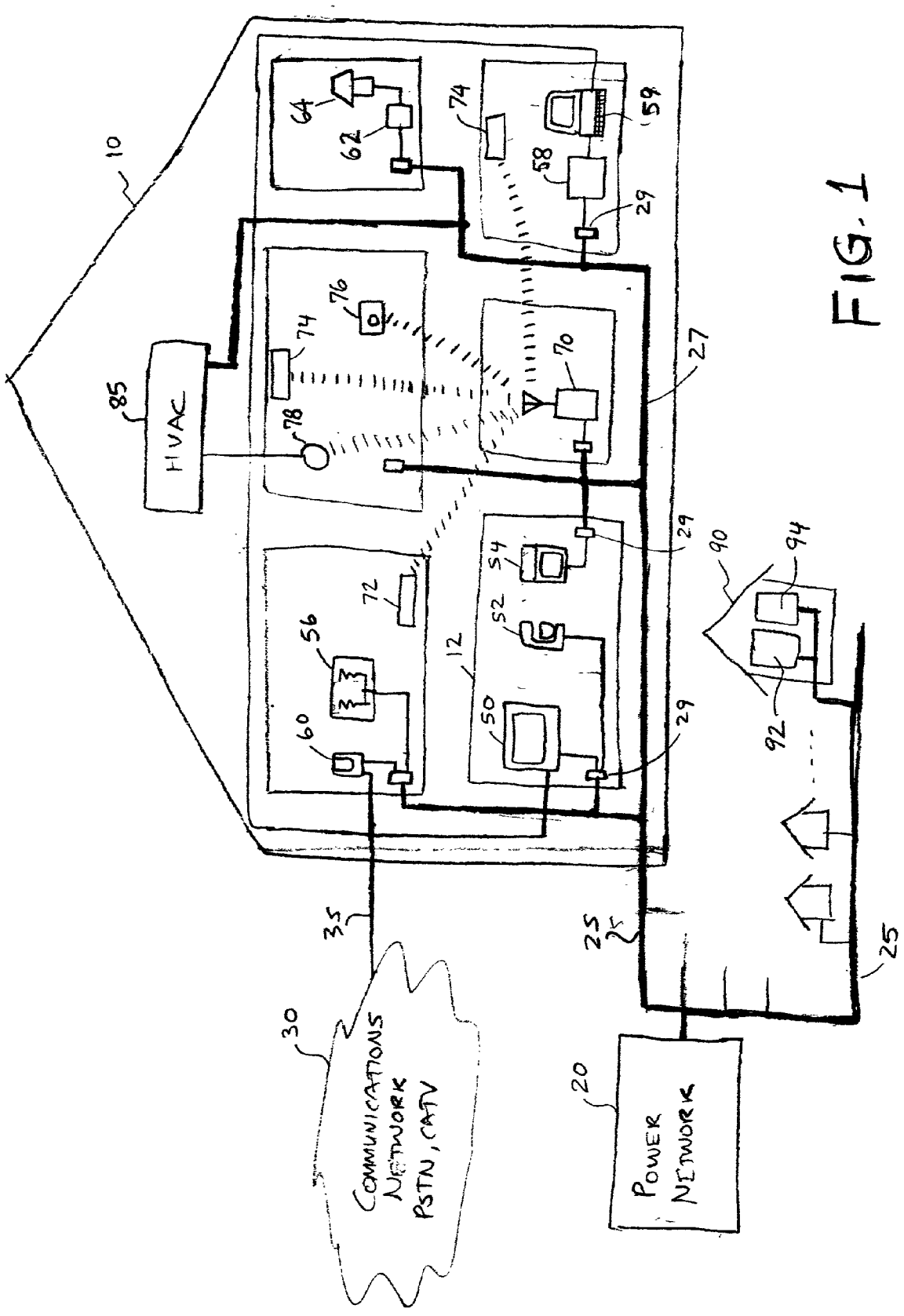
10
64
62
74
59
58
29
76
74
70
27
85
HVAC
78
29
72
54
56
52
12
60
50
29
90
94
92
35
25
25
30
COMMUNICATIONS NETWORK PSTN, CATV
20
POWER NETWORK

FIG. 1

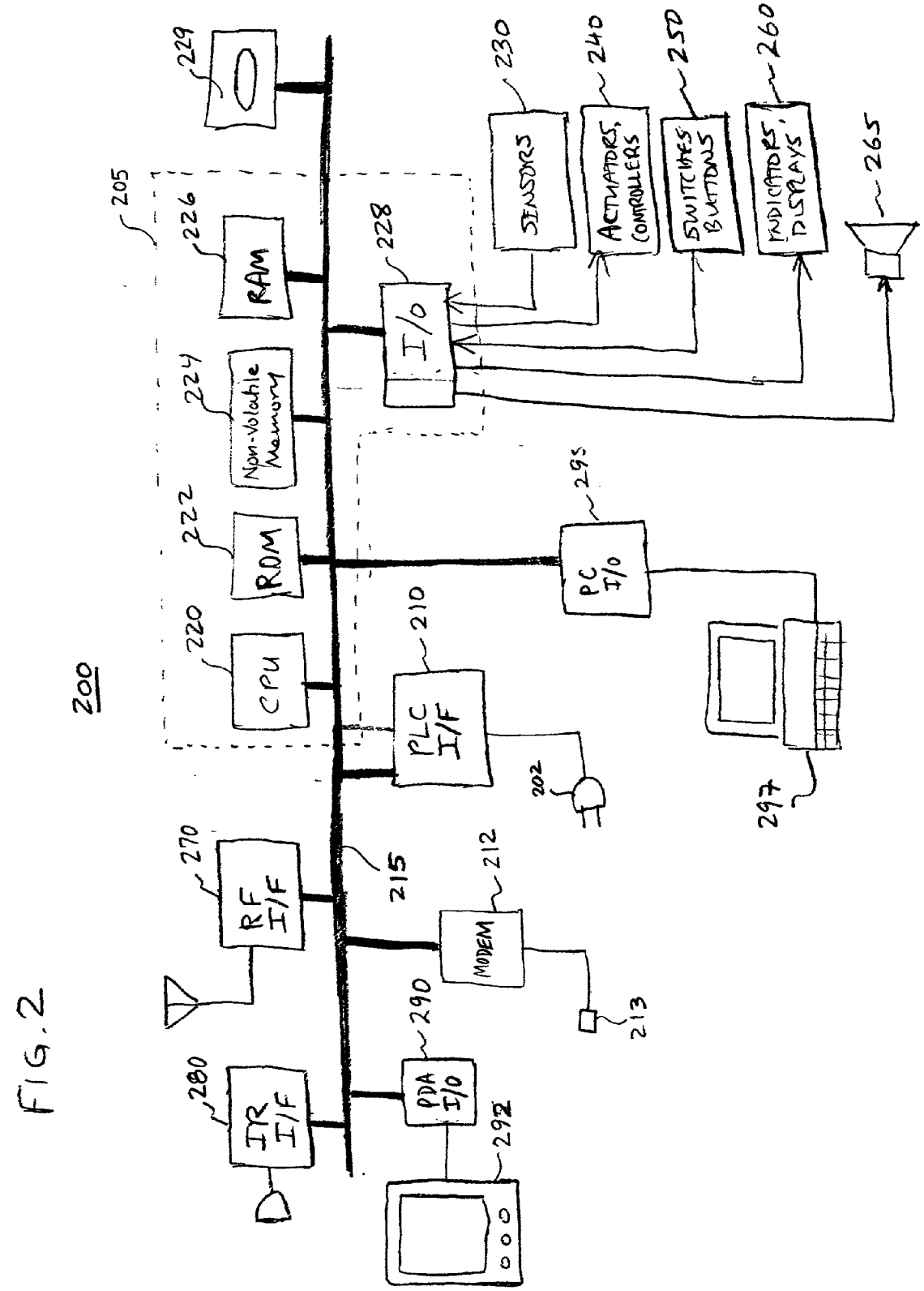
200
205
229
226
RAM
224
Non-Volatile Memory
222
ROM
220
CPU
228
I/O
230
SENSORS
240
ACTUATORS, CONTROLLERS
250
SWITCHES BUTTONS
260
INDICATORS, DISPLAYS
265
295
PC I/O
210
PLC I/F
202
297
270
RF I/F
215
212
MODEM
213
290
PDA I/O
280
IR I/F
292

FIG. 2

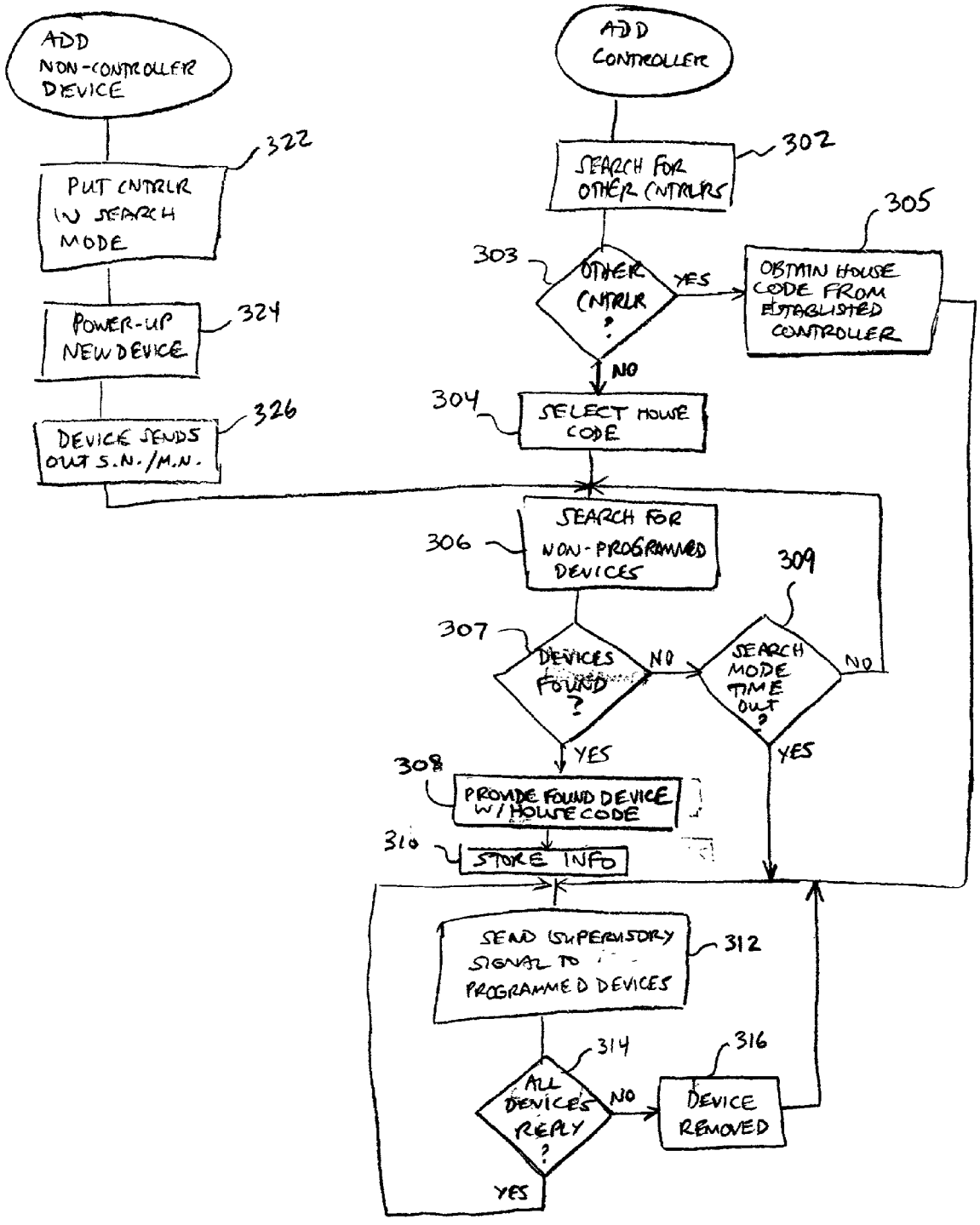
ADD NON-CONTROLLER DEVICE
322
PUT CNTRLR IN SEARCH MODE
324
POWER-UP NEW DEVICE
326
DEVICE SENDS OUT S.N./M.N.
ADD CONTROLLER
302
SEARCH FOR OTHER CNTRLRS
303
OTHER CNTRLR ?
YES
305
OBTAIN HOUSE CODE FROM ESTABLISHED CONTROLLER
NO
304
SELECT HOUSE CODE
306
SEARCH FOR NON-PROGRAMMED DEVICES
307
DEVICES FOUND ?
NO
309
SEARCH MODE TIME OUT ?
NO
YES
YES
308
PROVIDE FOUND DEVICE W/HOUSECODE
310
STORE INFO
SEND SUPERVISORY SIGNAL TO PROGRAMMED DEVICES
312
314
ALL DEVICES REPLY ?
NO
316
DEVICE REMOVED
YES

FIG. 3

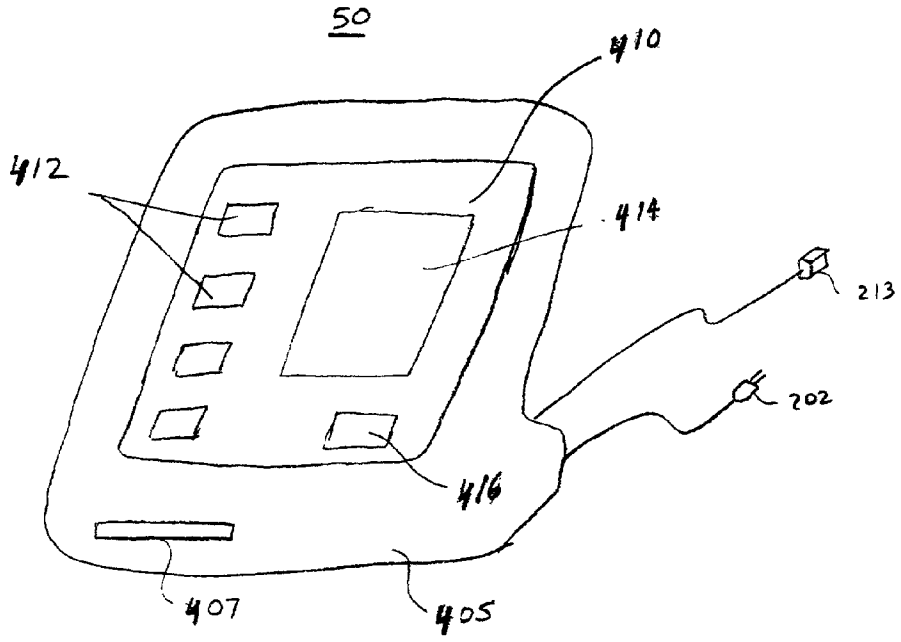
50
410
412
414
213
202
416
407
405

FIG. 4

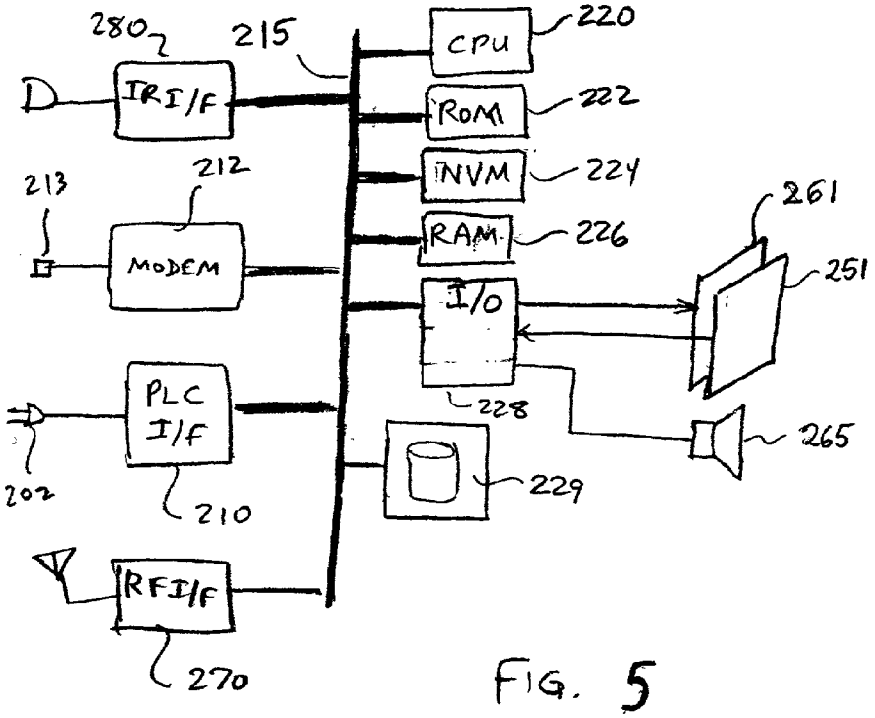
280
215
CPU
220
IRI/F
ROM
222
213
212
NVM
224
261
RAM
226
MODEM
251
I/O
PLC
I/F
228
265
202
210
229
RFI/F
270

FIG. 5

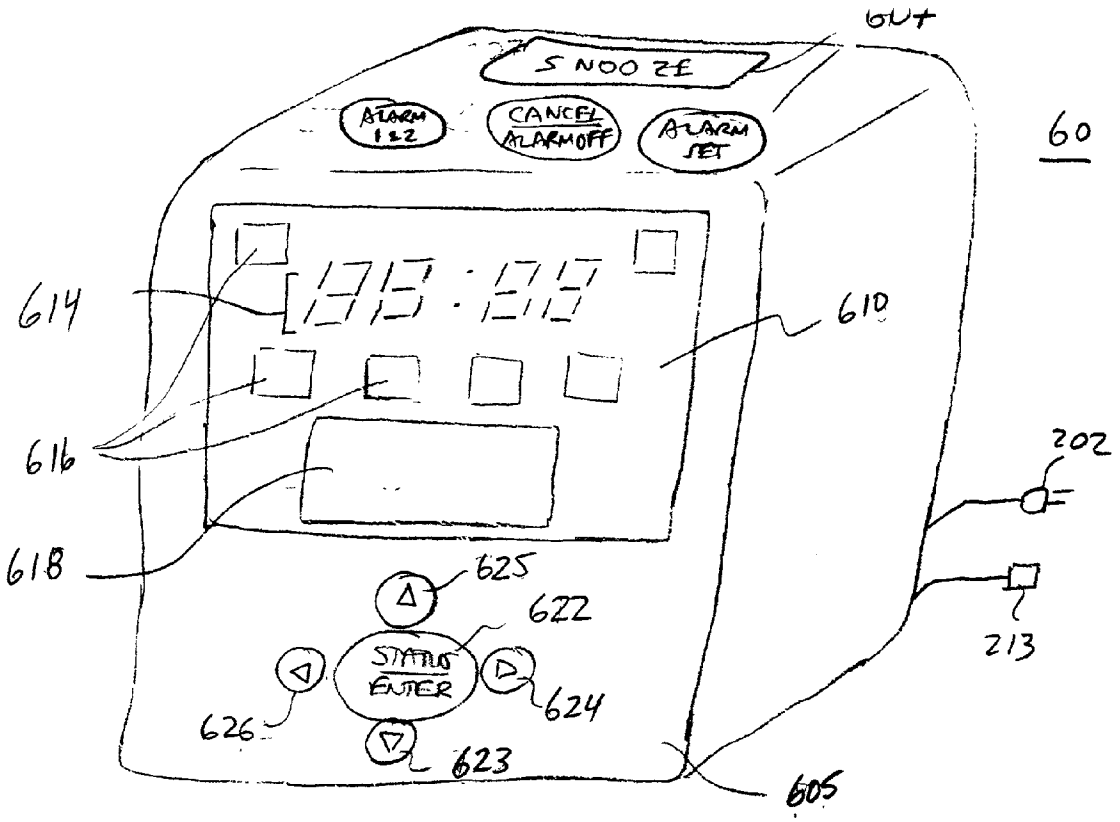
604
SNOOZE
ALARM 1&2
CANCEL ALARM OFF
ALARM SET
60
614
610
616
618
202
625
622
STATUS ENTER
626
624
623
213
605

FIG. 6

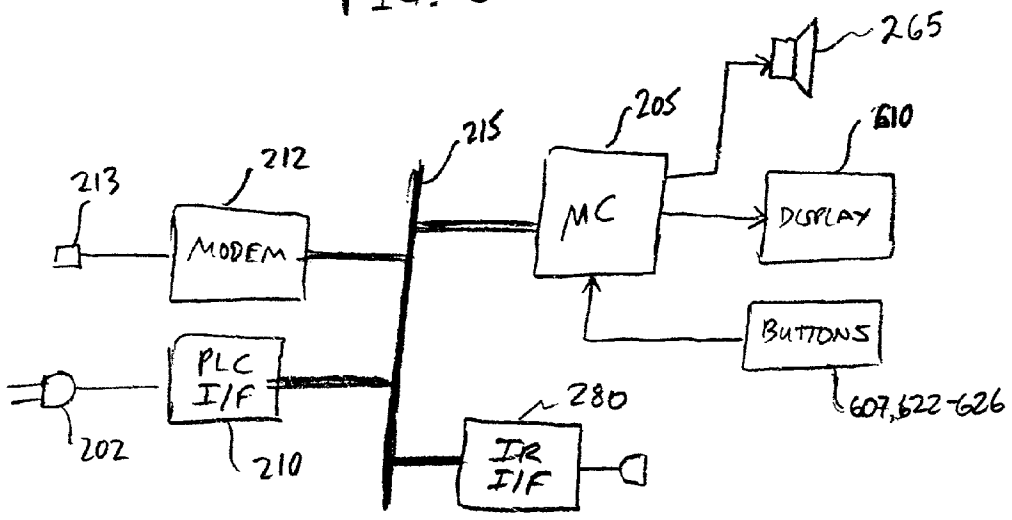
265
205
610
215
212
213
MODEM
MC
DISPLAY
BUTTONS
PLC I/F
280
IR I/F
202
210
607, 622-626

FIG. 7

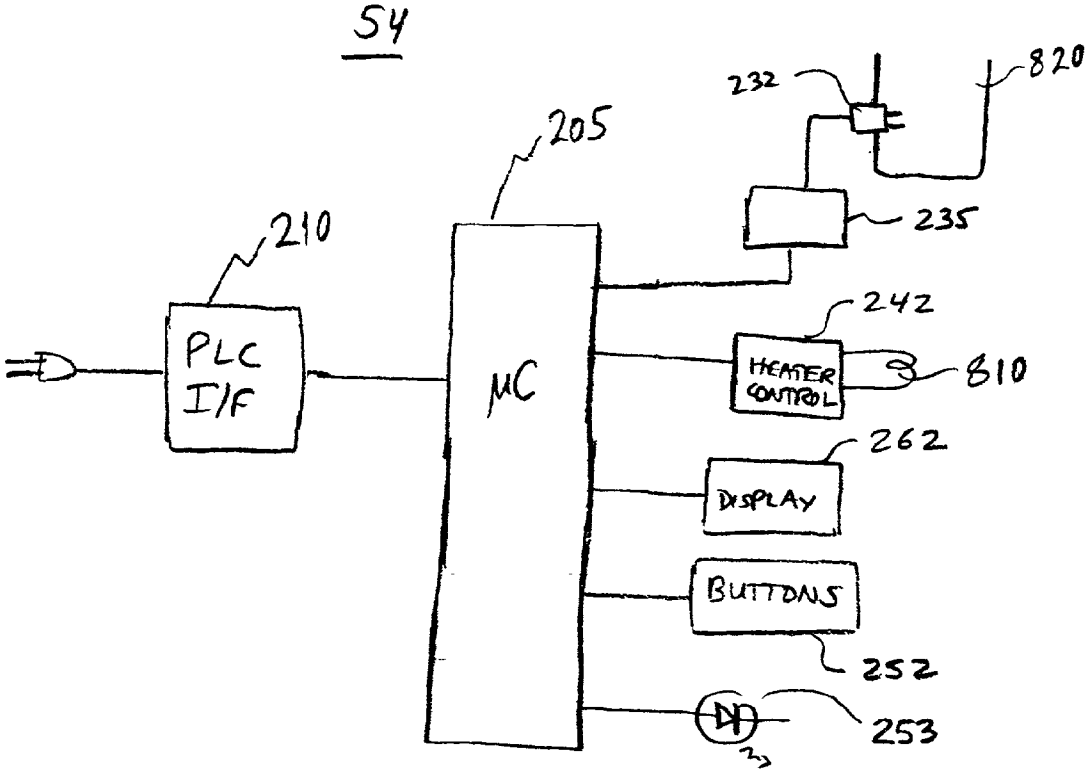
54
232
820
205
235
210
242
PLC
I/F
μC
HEATER
CONTROL
810
262
DISPLAY
BUTTONS
252
253

FIG. 8

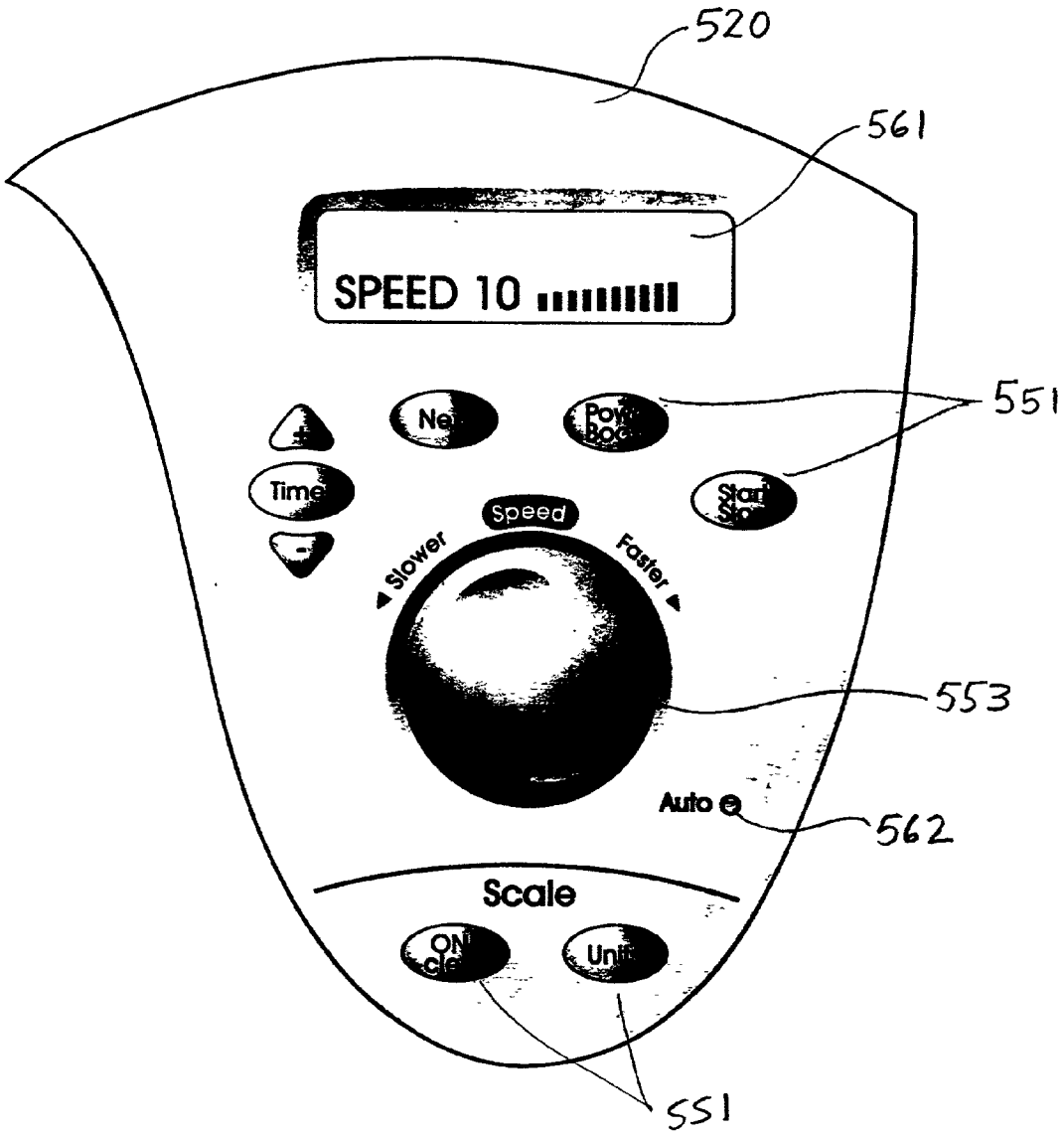
520
561
SPEED 10
551
Speed
Slower
Faster
553
Auto
562
Scale
551

FIG. 9A

52

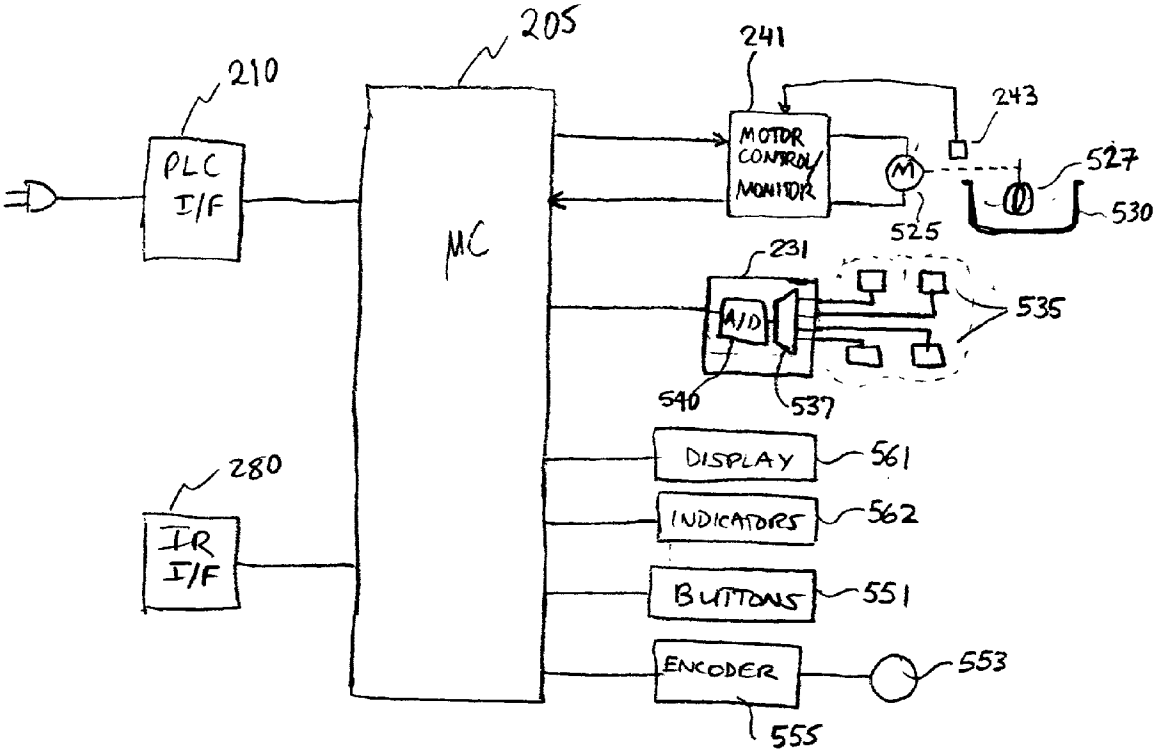

FIG. 10

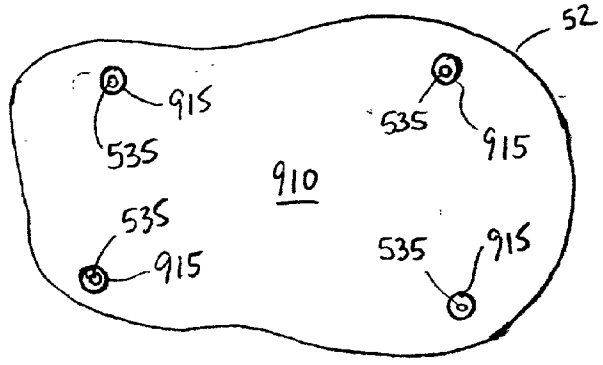

FIG. 9B

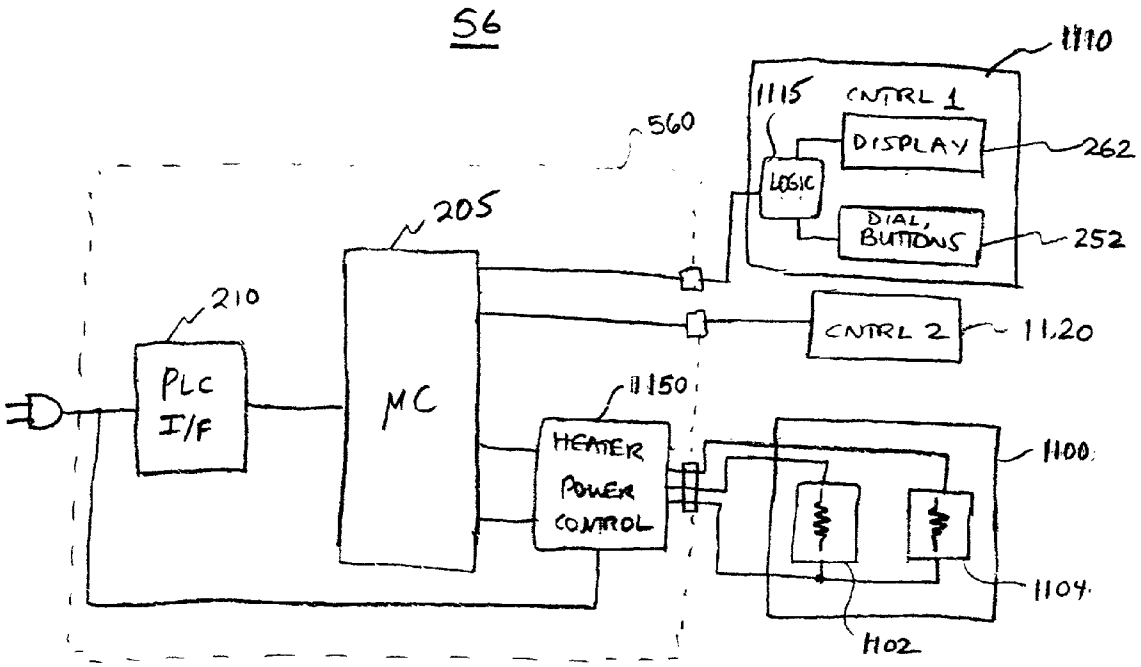
56
1110
1115
CNTRL 1
DISPLAY
262
LOGIC
DIAL, BUTTONS
252
560
205
210
PLC I/F
MC
CNTRL 2
1120
1150
HEATER POWER CONTROL
1100
1104
1102

FIG. 11

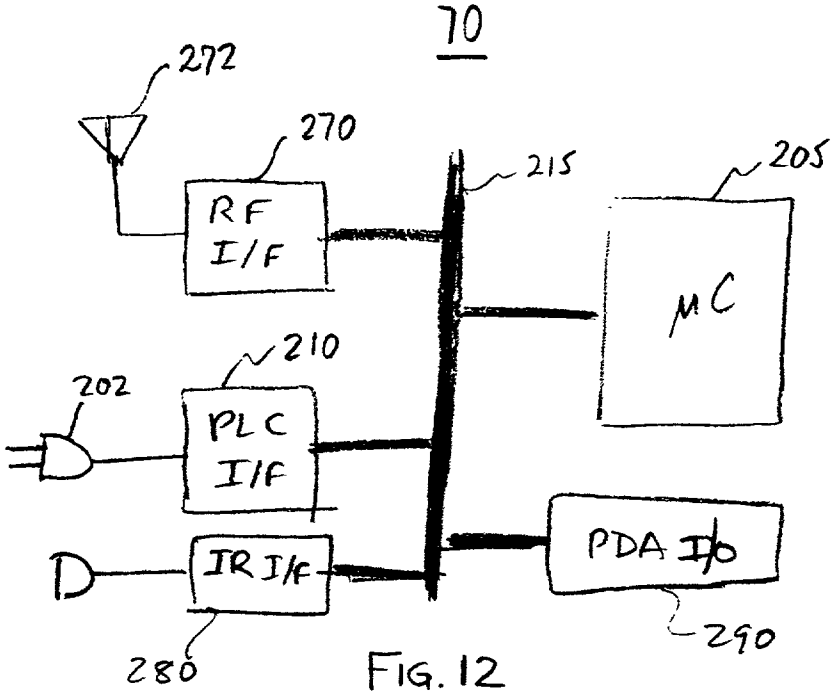
70
272
270
215
205
RF I/F
μC
210
202
PLC I/F
IR I/F
PDA I/O
280
290

FIG. 12

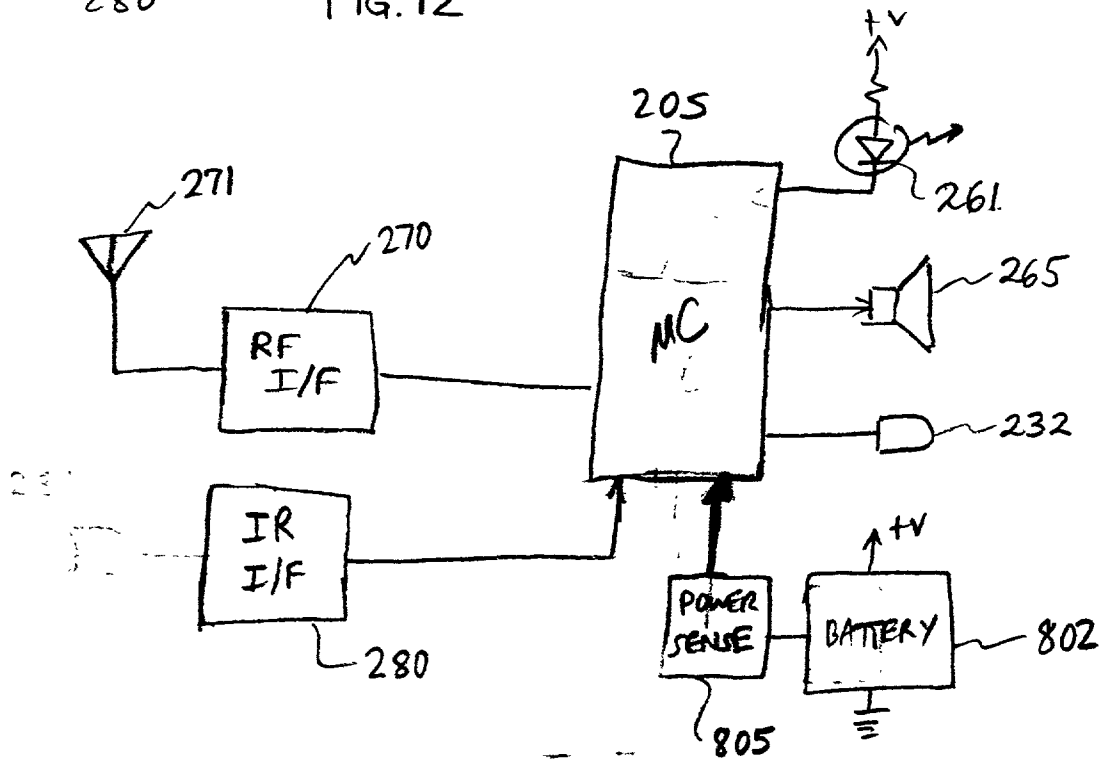
+V
205
271
270
261
265
RF I/F
μC
232
IR I/F
+V
POWER SENSE
BATTERY
802
280
805

FIG. 13

FIG. 14

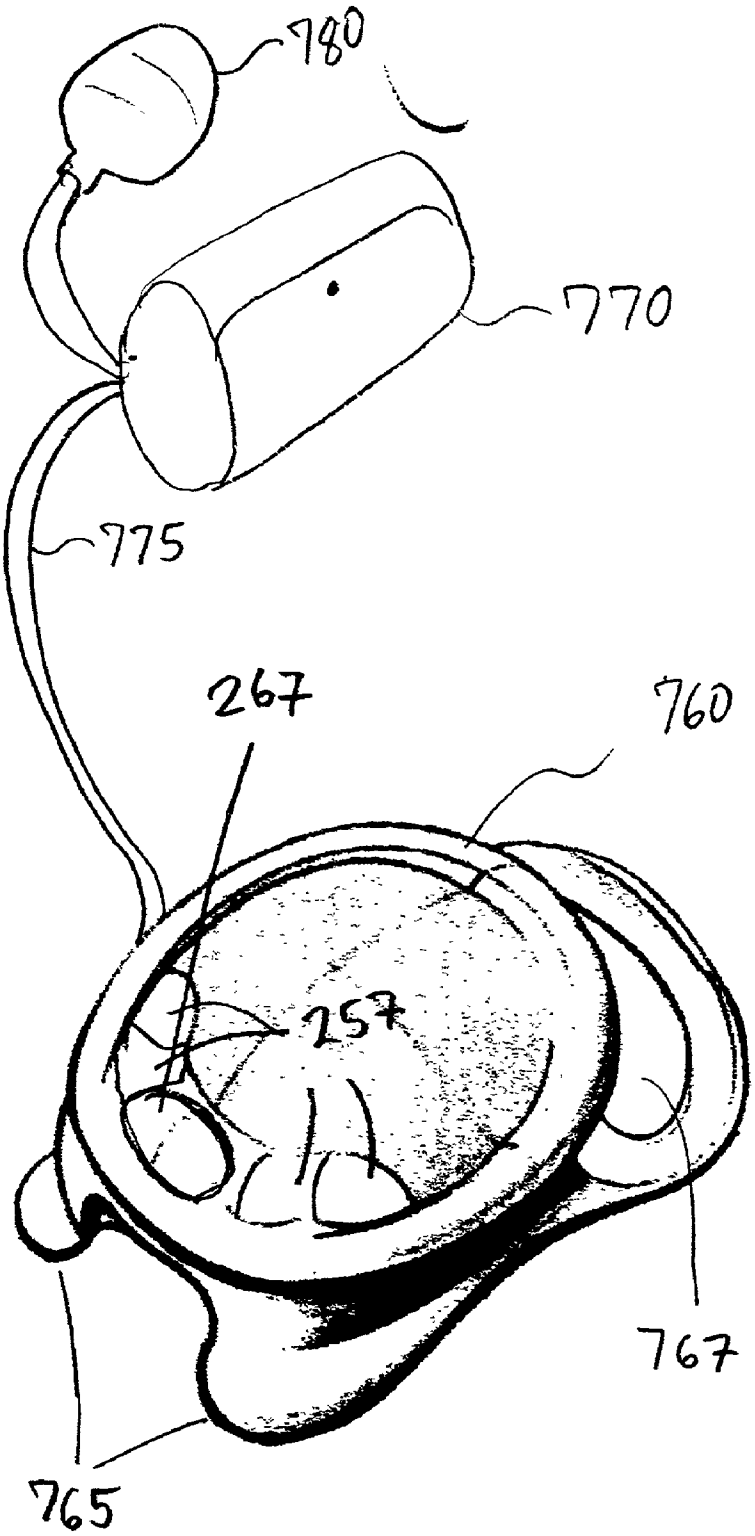

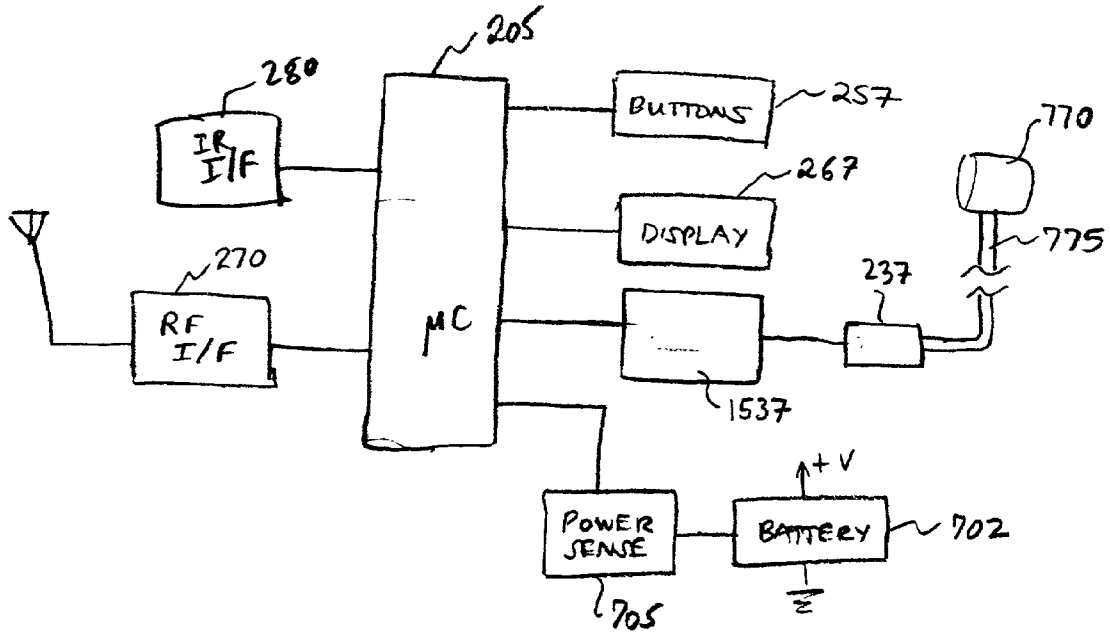
205
280
IR I/F
BUTTONS
257
770
267
DISPLAY
775
270
RF I/F
μC
237
1537
+V
POWER SENSE
BATTERY
702
705

FIG. 15

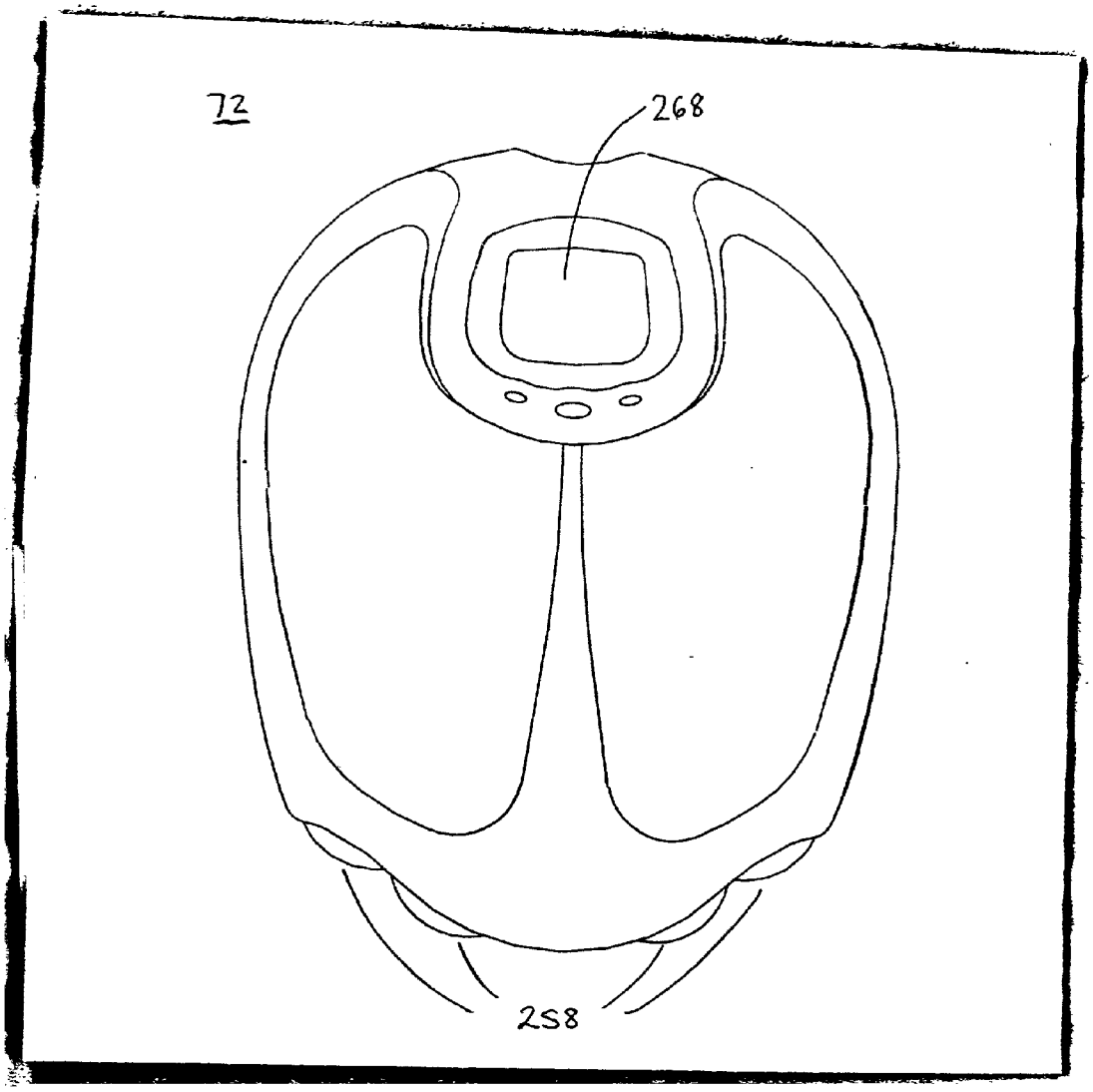

FIG. 16

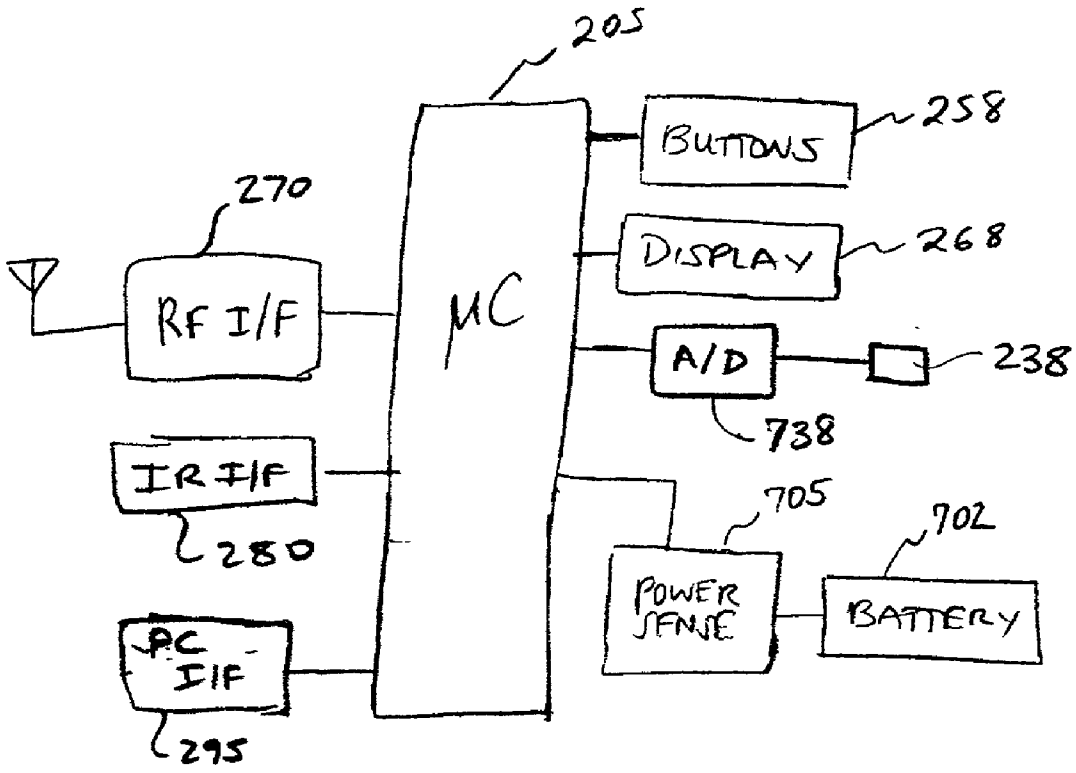
205
BUTTONS
258
270
DISPLAY
268
RF I/F
MC
A/D
238
738
IR I/F
280
705
702
POWER SENSE
BATTERY
PC I/F
295

FIG. 17

APPLIANCE COMMUNICATION AND CONTROL SYSTEM AND APPLIANCE FOR USE IN SAME

FIELD OF THE INVENTION

[0001] The present invention relates to intelligent appliances and systems and methods whereby such appliances can interact with each other.

BACKGROUND INFORMATION

[0002] The use of power lines for the communication of data is well known. Power line communication (PLC) systems and methods have been used in a variety of applications, including the control of household appliances. One manufacturer, X10 Ltd. of Seattle, Wash. provides a system comprising modules for controlling the application of power to appliances connected thereto in accordance with control signals generated by a controller and communicated over 110 VAC power lines. Like the modules, the controller plugs into the power lines. Each module includes a switch for selecting one of a plurality of identifiers by which the module is addressed by the controller, thereby allowing a plurality of appliances in a household to be controlled individually by one controller. The X10 system also includes a wireless controller which communicates via RF with a unit which is plugged into the power lines. The system can also communicate with devices such as battery-powered passive infrared motion detectors and other security-related devices via radio frequency (RF) links. The X10 system also includes a computer interface allowing a personal computer (PC) to control and program the system.

[0003] Systems such as the aforementioned suffer from several limitations and drawbacks. For example, the degree of control is limited to simply turning appliances on and off. There is no capability of communicating information between the controller and the appliances or among the appliances. Moreover, the aforementioned system does not provide a method of adding components and modifying the system which is user-friendly and flexible while providing a high degree of security.

SUMMARY OF THE INVENTION

[0004] The present invention provides a novel system whereby two or more appliances or devices can communicate and interact with each other over common power lines within a building. In an exemplary embodiment, the system comprises a controller device and a further device, such as a coffee maker appliance, that are each coupled to and powered from the wiring of a house. The controller and appliance communicate with each other over the household power lines using a bi-directional power line communications (PLC) protocol. The appliance can operate in a stand-alone mode or in accordance with messages received from the controller via the PLC interface. The appliance generates status messages that are received by the controller, thereby keeping the controller apprised of the state of the appliance.

[0005] In an exemplary embodiment, the controller is capable of communicating with external networks such as the Internet over a telephone connection or the like.

[0006] In a further exemplary embodiment, the present invention provides a system that allows wireless communication of data to and from appliances. As such, battery-powered devices or appliances that are not coupled to power lines can communicate and interoperate within a system of the present invention.

[0007] The present invention also provides intelligent appliances that are capable of communicating and interoperating in a system in accordance with the present invention.

BRIEF DESCRIPTION OF THE DRAWING

[0008] **FIG. 1** shows a block diagram of an exemplary embodiment of a system in accordance with the present invention.

[0009] **FIG. 2** shows a block diagram of an exemplary generic appliance in accordance with the present invention.

[0010] **FIG. 3** shows a flow chart of an exemplary procedure for configuring a system in accordance with the present invention.

[0011] **FIG. 4** shows an exemplary embodiment of a console device in accordance with the present invention.

[0012] **FIG. 5** shows a block diagram of an exemplary embodiment of a console device in accordance with the present invention.

[0013] **FIG. 6** shows an exemplary embodiment of an alarm clock device in accordance with the present invention.

[0014] **FIG. 7** shows a block diagram of an exemplary embodiment of an alarm clock device in accordance with the present invention.

[0015] **FIG. 8** shows a block diagram of an exemplary embodiment of a hot beverage brewing device in accordance with the present invention.

[0016] **FIGS. 9A and 9B** show an exemplary embodiment of a stand mixer device in accordance with the present invention.

[0017] **FIG. 10** shows a block diagram of an exemplary embodiment of a stand mixer device in accordance with the present invention.

[0018] **FIG. 11** shows a block diagram of an exemplary embodiment of a heating blanket device in accordance with the present invention.

[0019] **FIG. 12** shows a block diagram of an exemplary embodiment of a PLC/wireless bridge device in accordance with the present invention.

[0020] **FIG. 13** shows a block diagram of an exemplary embodiment of a smoke detector device in accordance with the present invention.

[0021] **FIG. 14** shows an exemplary embodiment of a blood pressure monitoring device in accordance with the present invention.

[0022] **FIG. 15** shows a block diagram of an exemplary embodiment of a blood pressure monitoring device in accordance with the present invention.

[0023] **FIG. 16** shows an exemplary embodiment of a weight measurement device in accordance with the present invention.

[0024] **FIG. 17** shows a block diagram of an exemplary embodiment of a weight measurement device in accordance with the present invention.

DETAILED DESCRIPTION

Control and Communications System

[0025] **FIG. 1** is a block diagram of an exemplary embodiment of a system in accordance with the present invention. The system can be used in a variety of settings such as in a house **10** which typically has a plurality of rooms **12**. The house **10** is typically coupled to a power network **20** and one or more communications networks **30**, such as a PSTN or CATV network. Power, typically 50/60 Hz, 110/220 VAC, is provided to the house **10** in a known way over a power line **25** and distributed within the house over internal power lines **27** coupled to outlet boxes **29** arranged among the rooms **12** of the house. Communications, such as telephone or cable television signals are provided to the house **10** over one or more communication lines **35**, in a known way.

[0026] The exemplary system of **FIG. 1** comprises a plurality of devices or appliances (e.g., **50**, **52**, **54**) that can be coupled to the power lines **27** of the house **10** by being plugged into a power outlet **29**. The exemplary system of **FIG. 1** also includes devices or appliances (e.g., **72**, **74**, **76**) that are not plugged into any outlet. These will be described more fully below.

[0027] The various devices of the present invention that are coupled to the power lines **27** of the house are capable of receiving and/or sending data over the power lines **27** using a power line communications (PLC) protocol, described more fully below. (Devices which communicate via PLC will be referred to herein as PLC devices or appliances.) A system in accordance with the present invention includes at least two PLC devices, at least one of which acts as a controller. In the exemplary embodiment of **FIG. 1, a** kitchen console **50** and an enhanced function alarm clock **60** both act as controllers. The console **50** and the alarm clock **60** can be used to control the operation of and to receive and display information from other devices or appliances in the system. The controllers **50** and **60** may also be coupled to an external communications network (e.g., the internet, world wide web) via telephone, DSL or cable TV lines **35** or the like, or via a wireless link such as cellular telephone, satellite or the like. Such external access provides the system of the present invention with a wide array of enhanced capabilities, described more fully below. Other PLC devices in the exemplary system of **FIG. 1** include a stand mixer **52**, a coffee maker **54** and an electric blanket **56**. A conventional PLC device **62**, such as the AM465 Lamp Module or AM466 Appliance Module available from X10 Corp., can also be included in an exemplary system of the present invention, for controlling the application of power to a lamp **64** or an appliance. The system of the present invention is preferably backward compatible with such conventional PLC devices (e.g., the PLC interface circuitry of the various devices of the present invention is preferably compatible with the X10 protocol as well as the more advanced EIA-600 protocol described more fully below.) The PLC devices **52**, **54** and **56** receive commands and/or data from the controllers **50** and **60** and transmit status information to the controllers **50** and **60**. The functions of the various PLC devices and the messaging used in the system of the present invention will be described more fully below.

[0028] The exemplary system of **FIG. 1** may also include a heating, ventilation and air conditioning (HVAC) system **85** which includes a PLC interface and is thus capable of sending and receiving commands and data over the power lines **27**. The HVAC system **85** may be coupled to a thermostat **78** which includes a PLC interface or a wireless interface, described below, for communicating within a system of the present invention.

[0029] The exemplary system of **FIG. 1** comprises a further device **70** which includes two interfaces: a PLC interface for communicating with other PLC devices over the power lines **27**, and a wireless interface for communicating with one or more devices that are not powered via the power lines **27** and thus lack PLC interfaces. (The latter devices will be referred to as wireless devices.) The device **70** acts a bridge between the PLC devices and the wireless devices, thereby allowing them to communicate with each other. (The device **70** will therefore be referred to as a PLC/wireless bridge.)

[0030] The exemplary system of **FIG. 1** includes several wireless devices: a foot scale **72**, smoke detectors **74**, and a blood pressure monitor **76**. The wireless devices **72**, **74**, and **76** communicate with the bridge device **70** over a wireless link. In a preferred embodiment, such a link uses radio frequency (RF) signals, although other wireless technologies such as infrared (IR) may also be used. RF is preferred since it does not require an unobstructed line-of-sight path between the transmitting and receiving devices thereby affording greater freedom in the placement of devices.

[0031] The exemplary system of **FIG. 1** also includes an interface device **58** for interfacing devices such as personal computers (PC) to the system of the present invention. The interface device **58** comprises a PLC interface and a further interface, such as an RS-232 serial interface, for coupling to a conventional PC **59**. Thus coupled to the system, the PC **59** can act as a system controller. Like the console **50** and the alarm clock **60**, the PC **59** may also be linked to an external communications network over telephone lines, cable, or the like.

[0032] **FIG. 2** is a block diagram of an exemplary embodiment of a device **200** in accordance with the present invention for use in a system of the present invention. The exemplary device of **FIG. 2** represents a generic device or appliance typically having a superset of the functionality that may be found in any one device. Generally, each of the aforementioned devices or appliances can be implemented with a subset of the functional blocks shown in **FIG. 2**.

[0033] As shown in **FIG. 2**, each device **200** includes a central processing unit (CPU) **220**; a read-only memory (ROM) **222**; non-volatile memory **224**, such as electrically-erasable programmable ROM (E2PROM) or flash memory; random access memory (RAM) **226**; and some form of input/output (I/O) controller **228** coupled to one or more of a set of sensors **230**, actuators **240**, switches **250**, indicators **260** and sound generating devices **265**. The capacities and capabilities of the various components and the mix and function of the sensors, actuators, switches and indicators will depend on the device represented by the block diagram of **FIG. 2**. For example, an exemplary embodiment of the mixer appliance **52** includes several buttons, a multi-segment LCD display, a dial, whose position is detected by a rotary encoder, a current sensor (for sensing the torque

applied by the mixing motor), a variable speed motor controller, and a plurality of load cells for measuring weight.

[0034] The CPU **220**, ROM **222**, E2PROM **224**, RAM **226** and I/O block **228** can be implemented as a combination of one or more discrete components or with a single-chip micro-controller **205** such as those of the Z8 series manufactured by Zilog Corporation. Some devices, such as the console **50**, described more fully below, may include mass storage **229** with fixed and/or removable storage media (e.g., hard drive, CDROM, floppy disk, DVD, etc.) or the like. The blocks **220-229** are coupled to and intercommunicate over a bi-directional bus **215** in a known way.

[0035] Devices of the present invention that are powered from household power (e.g., 110 VAC) or are otherwise coupled to the power lines **27** (i.e., the aforementioned PLC devices) comprise PLC interface circuitry **210**. The PLC interface **210** couples to the power lines **27** via a conventional power connector **202**. The interface **210** is coupled to the bus **215** and communicates with the other blocks in the device **200** which are coupled to the bus. The PLC interface circuitry **210** can be implemented using an SSC P300 integrated circuit (IC), available from Intellon Corporation of Ocala, Fla. Other implementations for the PLC interface are possible, although it is preferable that the PLC interface comply with an industry standard such as the EIA-600 standard (or "CE Bus" standard). The EIA-600 standard PLC interface provides 9.6-19.2 Kbaud, bi-directional communication over standard household power wiring. In an exemplary system of the present invention, the data rate is 9.6 Kbaud, although rates as low as 1.2 Kbaud may be used. The EIA-600 standard also provides higher level messaging functions using a Common Application Language (CAL).

[0036] The aforementioned wireless devices **70-78** comprise an RF interface **270** and/or an IR interface **280**, depending on the wireless technology employed. The RF interface **270** may be bi-directional or, in order to limit power consumption, unidirectional (i.e., transmit-only), and can be implemented in a known way. In the case of a unidirectional RF interface **270**, it may be desirable to also include an IR interface **280** which is at least capable of receiving. As described more fully below, the wireless devices **70-78** can use such an interface to receive programming information upon initial setup. Moreover, an IR interface **280** can be included in any device (PLC or wireless) to allow the device to communicate with other devices such as Personal Digital Assistants (PDAs) or telephones having IR interfaces. It may also be desirable to provide some devices with a docking interface **290** for devices such as PDAs. For example, with a PDA port **290** (or IR interface **280**) the mixer **52** can be controlled directly from a PDA either in a manual mode (e.g., with the PDA acting as the mixer's control panel) or in an automatic mode (e.g., with the mixer executing a recipe downloaded from the PDA). This capability would allow an appliance of otherwise conventional functionality to greatly expand its capabilities. A device with a PDA coupled thereto (either directly or by a wireless link) may also act as a system controller.

[0037] Devices such as the kitchen console **50** and alarm clock **60** that are capable of external data communication include a modem **212**, or the like, for communicating over the medium of choice (e.g., telephone, cable, wireless).

[0038] While each of the appliances of the present invention, such as the mixer **52**, coffee maker **54**, electric blanket **56**, alarm clock **60**, scale **72**, smoke detector **74** and blood pressure monitor **76**, are capable of operating individually in a stand-alone mode, adding an additional device of the present invention, such as a console **50**, to the same household creates a control and communications system which provides substantially enhanced functionality and capabilities. A user may thus, for example, first purchase a coffee maker **54** and then add a console **50** or alarm clock **60**. When a controller **50, 59, 60** and another PLC device are plugged into the power lines **27** of a household **10**, an appliance communication and control system is thus formed, in accordance with the present invention. When a PLC/wireless bridge **70** is added, a mix of wireless components **72, 74, 76** can also be included in the system.

[0039] An exemplary procedure for setting up a system and adding devices to a system in accordance with the present invention will now be described with reference to **FIG. 3**.

[0040] When a controller, such as the console **50** or the alarm clock **60**, is plugged into the power lines **27** of a house **10**, it will first perform a search (step **302**) for other controllers **50, 59, 60**, that may be plugged into the power lines of the house. If the controller **50, 59, 60** determines (step **303**) that there are no other controllers plugged into the power lines **27** of the house **10**, it will select a house code (step **304**) for the house **10** and proceed to search for other PLC devices (step **306**) that may already be in the house (operating as stand-alone appliances) but that have not yet been enabled or programmed for communication over the system of the present invention. PLC devices in accordance with an embodiment of the present invention that are powered and operating will periodically emit identifying information (e.g., model number and serial number). The controller **50, 59, 60** will monitor the PLC interface for such identifying information (step **306**). If the controller **50, 59, 60** detects valid identifying information that it has not detected before (step **307**), thereby indicating the detection of a new device, it will provide the new device with the house code (step **308**). The new device will store the house code in its non-volatile memory and preferably acknowledge this event with an appropriate message to the controller **50, 59, 60**. Within the acknowledgement or a subsequent message, the new device may also provide the controller **50, 59, 60** with any relevant additional data for the device (e.g., software version, register contents, configuration information, etc.) The controller **50, 59, 60** will then enter the device information (e.g., serial number, model number, software version, etc.) into a database in its non-volatile memory. Some device information need not be stored at the controller, however, since it can be queried at any time the device is coupled to the system. For example, it may not be cost or space efficient or useful to store the software versions and manufacturing lot numbers of the appliances in each controller, but the information will still be available at the appliance and can be retrieved as needed.

[0041] Once a device has been programmed with a house code, it will respond only to messages that reference that house code. Moreover, messages originating from the device will reference the house code stored in the device. Any further messages communicated between the controller **50, 59, 60** and the device must include the correct house code or else they are ignored by the recipient.

[0042] By storing the house code in non-volatile memory, an appliance may be removed and reconnected to a system of the present invention and it will retain its associated house code. For example, a stand mixer **52** is often kept under the counter and plugged in only when needed. It will keep its house code so that it does not need to be reinstalled in the home system every time it is plugged in. If the house code stored in an appliance is to be changed, the user, in an exemplary embodiment, must initiate a reset sequence to clear out the old house code, such as by pressing and holding a certain button or buttons while the device is powered. This would restore the appliance to its default state (i.e., as from the factory), ready to be reinstalled in the same or a different home with a different house code.

[0043] Because multiple homes may be coupled to the same power distribution trunks **25**, as shown in **FIG. 1**, it is possible for PLC signals from one house **10** to propagate to another house **90** coupled to the same power distribution trunks **25**. By thus assigning a house code to the devices within each house, in accordance with the present invention, a device within a house will communicate only with a controller within the same house and not with controllers located in other houses coupled to the same power distribution trunks **25**. This arrangement prevents a controller **92** or a PLC appliance **94** located in a house **90** from communicating with the controllers or appliances of the house **10**, and vice versa.

[0044] If a newly added controller **50, 59, 60**, detects that there is another controller already in the system (step **303**), the newly added controller obtains the house code from the established controller, stores the house code in its non-volatile memory and uses the house code in its communications, as in the case of any newly added PLC device.

[0045] In an exemplary embodiment of a method for adding an appliance or a controller to a system of the present invention, an already installed controller is placed in a search mode that looks for new appliances and controllers in the home. This special mode times out after a predetermined period of time (e.g., 5 minutes) within which the user would have to plug in or activate the new appliance or controller. The likelihood of a neighboring system having one of its controllers in that mode at the same time is extremely low, in which case the neighboring controllers would not detect any one else's appliances as they are installed. In the unlikely case that two buildings having sufficient electrical connection to detect each others signals and each had a controller in the same search mode at the same time, then the controllers would both show any appliance newly installed in either system during the time period of the search mode. In this embodiment, the user is required to confirm the addition of each new appliance by pressing a button or taking a similar action at the controller. If a user nonetheless accidentally programs an appliance in a neighbor's house to be part of his system, then the user could have control of that appliance until the real owner corrected the problem. Presumably the real owner would immediately be aware of the mistake, since his controller would not be able to find the new appliance (since it attached and configured to the neighbor's house code). He would then be directed (e.g., by the instruction manual or on-line instructions provided by the controller) to initiate a house code reset in the appliance and to try again. This would clear the neighbor's house code from his appliance and allow him to correctly configure it for his home.

[0046] The communication and house code setup described above would apply equally to the addition of new controllers into a home. In addition to the original controller telling the new controller what the house code should be, it could also transfer controller-specific information such as information about user-selected identifiers for each of the appliances in a home. For example, an internal table could relate the serial number of each smoke alarm to a room (basement, garage, hallway, etc.) Also, multiple appliances of the same type may be described by use or owner, such as with "his" and "hers" coffee makers that might be loaded with different types of coffee.

[0047] **FIG. 3** illustrates an exemplary procedure for adding a new appliance to an already operational system of the present invention. To initiate the addition of a new appliance, the user preferably puts the controller **50, 59, 60** into a search mode (steps **322**). The user then powers the new device (step **324**) which then begins to transmit its identifying information (e.g. model number and serial number) (step **326**). The controller **50, 59, 60** monitors the PLC interface (step **306**) and proceeds as described above if a new device is detected. The controller **50, 59, 60** will stay in the search mode for a predetermined period of time (e.g., 1 min) and then return to normal operation (step **309**).

[0048] In an alternative embodiment, a newly added device can initiate this procedure without requiring the user to place the controller **50, 59, 60** in a search mode. This may create the problem however, of causing a controller in a neighboring building to inadvertently add the new device to the neighbor's system. In this case, before the controller provides the new device with the house code, the user can be asked to confirm this operation by manually entering the device's serial number into the controller. The controller then checks the user-entered serial number against the serial number received from the new device and if there is a match, will proceed to add the new device to its database and to provide the new device with the house code.

[0049] In an exemplary embodiment, the initial programming of wireless devices such as the scale **72**, smoke detector **74** and BP monitor **76** is handled primarily by the PLC/wireless bridge device **70**. In this embodiment, the bridge device **70** programs the newly added wireless device with the house code and wireless communications channel information via an IR interface, as described more fully below. The newly added wireless device confirms its initialization by transmitting its identifying information (e.g., serial and model numbers) along with the house code to the bridge device **70**. The bridge device **70**, in turn, via the PLC interface, informs the system controller of the new wireless device and provides to the system controller the identifying information for the newly added wireless device. The controller then adds the new wireless device to its database.

[0050] During normal operation, the controller **50, 59, 60** will periodically broadcast (e.g., hourly, daily) a supervisory message to all of the devices on the system (step **312**). In addition to the house code and other system-specific information, the supervisory message preferably includes the current time and date. A properly operating device will reply to the supervisory message. Devices which include a clock

function can use the time and date broadcast in the supervisory message to synchronize their clocks. If the controller **50, 59, 60** determines (step **314**) that one or more devices listed in its database as active did not reply to the supervisory message, the controller will assume that the non-responding devices were removed from the system and thus remove those devices from its database (step **316**). Preferably, the controller **50, 59, 60** maintains a log of devices that are removed from the system including the time and date of removal. When a safety device such as a smoke detector **74** or the like is removed, the controller preferably generates an alert to inform the user.

[**0051**] The action the controller takes when a previously logged appliance is absent from the system preferably depends on the appliance. A safety or security related device such as a smoke alarm or motion sensor may warrant the controller setting off an alarm or other more urgent notification. An appliance that is expected to be removed and reconnected regularly, such as the stand mixer, may simply be displayed on the controller with its current connection status only when the user causes the controller to enter a status display mode. In an exemplary embodiment, the controller will rely on the user to tell it to remove a non-connected device from its internal databases, in most cases. For example, if a smoke detector has failed and must be discarded, the controller will detect the smoke detector's absence and can provide an indication to the user. The user may then be required to confirm that the device should be permanently removed from the system. This can be either by a user initiated command, or by a user response to a controller's query, e.g. a display of the question "HALLWAY smoke alarm not detected. Remove from system permanently?".

[**0052**] A further procedure may be used to add conventional devices, such as X-10 devices, to a system of the present invention. With such devices, a house and a device code are manually selected at each device. Being listen-only, such devices do not broadcast their code settings. When adding such a device to a system of the present invention, the user manually enters the house and device codes selected on the device into the system controller. The system controller then uses those codes when communicating with that device (e.g., using the X-10 protocol).

Intelligent Appliances and Devices

[**0053**] Each of the devices and appliances mentioned above will now be described in greater detail with reference to **FIGS. 4 through 17**.

PLC Appliances and Devices

[**0054**] KITCHEN CONSOLE

[**0055**] **FIG. 4** shows an exemplary embodiment of a console **50**, in accordance with the present invention. The console **50** comprises a housing **405** which houses the circuitry of the console including a touchscreen display **410**. The touchscreen display **410** can be implemented using conventional components, such as a 12" diagonal, 800×600 resolution, back-lit, color, liquid crystal display (LCD) with a touch-sensitive array overlaid thereon. In an alternative embodiment, the console **50** may be provided with a keyboard and/or a pointing device such as a mouse or track ball (not shown) in addition to or as alternatives to the touchscreen. Since the console **50** will likely be used in a kitchen, it is preferable that the console be easy to clean and be resistant to the often harsh conditions prevalent in a kitchen setting.

[**0056**] The exemplary console **50** is provided with a power cord and connector **202** and a telephone cord and connector **213**. The housing may include an opening **407** for inserting removable storage media **229**, such as a CDROM, DVD, floppy disk, or smart card into the console.

[**0057**] The touchscreen display **410** may display a multitude of images and combinations thereof such as one or more softkeys **412**, static or moving images **414** or other display elements **416** such as advertising, promotional offers, or blocks of information such as weather, news headlines, stock tickers, or the like. Depending on the nature of the display element, pressing the touchscreen at the display element can provide additional information or initiate further actions. For example, a display element **416** may display an offer of a discount coupon. By pressing on the display element, the discount coupon can be added to an electronic shopping list maintained by the console **50**.

[**0058**] It should be noted that a similar user interface can be provided with a PC **59** coupled to the system of the present invention. In that case, a mouse and keyboard would most likely be used in place of the touch-sensitive screen.

[**0059**] **FIG. 5** shows a block diagram of the major functional elements of the circuitry of the console **50**. In an exemplary embodiment, the CPU is a Pentium class processor, from Intel Corporation, 64 MB of RAM 226 and 1 KB of NVM are included. Mass storage 229 comprises a 6 GB hard drive and a CD-ROM drive. The I/O block **228** comprises a video control circuit, for driving the LCD **261**, a touchscreen scanning circuit for detecting presses of the touchscreen array **251** and a sound control circuit for driving a sound generating device **265**, such as a loudspeaker, piezoelectric element or the like. The sound generating device **265** is used to produce various sounds such as alarms, prompts, key clicks, etc. or to reproduce voice or music. Each of the aforementioned blocks can be implemented using known devices.

[**0060**] The console **50** includes a PLC interface **210** and may also include an RF interface **270** and/or an IR interface **280**.

[**0061**] A modem **212** is included to allow the console to communicate over conventional telephone lines. In an alternate embodiment, the modem itself may be a PLC device, accessible to other PLC devices, such as the console **50**, via the PLC interface. The kitchen console **50** may also include a telephone and/or speakerphone (not shown) for voice communications over the telephone lines.

[**0062**] As discussed, the console **50** serves as a controller in an appliance communication and control system of the present invention. In addition to providing a user interface, the console **50** also provides a communications interface to external networks, such as the Internet, via its telephone connection. In a typical application, the console **50** can be used, for example, to browse the Internet for recipes. The recipes can be displayed on the touchscreen **410** with each recipe step having an associated softkey **412** that the user can press to request additional information (e.g., ingredient substitutions) or to indicate that the associated step has been

completed. The console **50** can also provide the recipes to other devices in the system, such as the mixer **52**. As explained more fully below, the mixer **52** can display the recipe steps and execute mixing functions in accordance with the recipe steps.

[**0063**] As a system controller, the console **50** maintains identifying and status information for each of the devices coupled to the system. The console **50** can thus be used to display status information for the various devices in the system. For example, if the coffee maker **54** has completed a brew cycle, it can send a message to the console **50** informing it of this event. The console **50** can then display a graphic indicating that the coffee maker **54** is ready to serve coffee.

[**0064**] In addition to device status and identifying information, the controller can also maintain a log of any error messages or alarms generated by the controller or a device.

[**0065**] Moreover, the various devices and/or the controller can maintain usage information, e.g., button presses, operational cycles, etc. For example, the coffee maker **54** can keep track of the number of presses of each button on its control panel, the start and end times of each brew cycle, etc. This information can be maintained locally at the appliance and uploaded to the controller periodically or upon demand.

[**0066**] Additionally, the controller (e.g. console **50**) can supply the system information remotely. This ability is helpful, for example, when obtaining customer support for an installed system. By uploading the system information to the customer support system, a customer representative can be provided with the system information conveniently and accurately during a customer service call. Furthermore, the customer support system may also be able to run diagnostic tests remotely on a customer's system and to download the latest software for each appliance. The appliance usage information is also valuable in determining how the appliances are being used, thereby giving insights as to how they can be improved or modified.

[**0067**] The console **50** by virtue of its external connectivity provides a point through which the system of the present invention can be monitored and controlled remotely. For example, by accessing the console **50** over the internet or by telephone, a user can obtain the status of the various devices and appliances within the system. By the same connection, the user can also control the various devices and appliances. For example, a user can dial the console **50** and reset the brewing start time of the coffee maker **54** or activate a preheat feature of the heating blanket **56**. The user can also query the system to determine whether any appliance or device has been activated or used during a specified period.

[**0068**] Remote access to the system of the present invention via a system controller, such as the console **50**, is preferably secured such as by requiring the user to enter a password. Local access and activation of the system can also be controlled by password. For example, an authorized user can lock or disable selected appliances of the system so as to disable their operation for a preselected period of time or until the correct password is provided to the system. Such a locking function can be performed remotely, at the system controller or at each appliance. The user can also assign one or more temporary access passwords which allow temporary access to or activation of all or some of the system appliances. Such a feature is useful, for example, where the user would allow cleaning personnel to use the coffee maker **54** between the expected working hours but would not allow the cleaning personnel to use the mixer or the kitchen console **50**. The user can also access the system to determine if and when the temporary access password has been entered.

[**0069**] The system of the present invention, via the console **50**, or other such system controller, can interact with networks such as the Internet in context-specific and targeted modes that are heretofore unprecedented. Via the console **50**, the system of the present invention can browse the Internet and access information therefrom as a function of the operational state of the system and/or of information gathered by the system. For example, when a user is accessing a recipe on a recipe website, the user can add all or some of the listed ingredients to a shopping list by pressing the touchscreen next to or on the respective ingredients. Selected ingredients may also have manufacturers' discount coupons attached thereto. Once completed, the user can electronically send the shopping list, with coupons, to an on-line grocer for processing, payment and delivery. The list can also be printed at a printer coupled to the system (e.g., via the PC **59**) or uploaded to a PDA via the IR interface **280** or other serial data interface of the console **50**. Once in the PDA, the list can then be downloaded to a receiving system at a grocery store for processing.

[**0070**] The system of the present invention can also provide a valuable targeted marketing function. In addition to the aforementioned coupon scenario, the system controller, such as the console **50**, can receive and display advertising and promotional information which can be tailored to a specific task being carried out by a user with the system of the present invention. For example, when the user is programming the coffee maker **54**, the console **50** can download or display a previously downloaded advertisement (preferably downloaded during low network usage hours) for a particular brand of coffee which may also include an electronic coupon. If the user wishes to purchase the item, he can add it to a shopping list, as described above. In another exemplary scenario, if weight measurements uploaded from the scale **72** to the console **50** suggest a significant weight increase, the console can download suggestions for dietetic food or an advertisement for a health spa. Preferably, the provision of such information and advertising can be controlled by the user.

[**0071**] The console **50** can also provide a variety of additional functions. For example, the console can serve as a home organizer or household information center, storing and displaying messages, reminders, telephone numbers and addresses. The console **50** can also be programmed to search for and download news and information such as sports and weather reports with pre-programmed "hot keys" for selected websites. Periodically updated information such as news can preferably be downloaded during low traffic hours and presenting later on request. The console **50** may also provide personalized "homepages" for each of multiple users for storing and providing restricted access to personal information such as memos and weight and blood pressure information obtained from the scale **72** and BP monitor **76**.

[**0072**] ALARM CLOCK

[**0073**] **FIG. 6** shows an exemplary embodiment of an alarm clock **60**, in accordance with the present invention. As

mentioned, the alarm clock **60**, like the console **50**, can act as a system controller. A system in accordance with the present invention may have multiple controllers, although the various controllers may have different capabilities and features. Whereas the console **50** will typically be located in a kitchen, the alarm clock **60** will typically be located in a bedroom.

[**0074**] As shown in **FIG. 6**, the clock **60** comprises a housing **605**, which houses the circuitry of the clock, a display **610** and buttons **607** and **622-626**. The exemplary alarm clock **60** is provided with a power cord and connector **202** and a telephone cord and connector **213**. The housing **605** may comprise an opening (not shown) for a sound generating device such as a speaker.

[**0075**] The display **610** may comprise a time display field **614**, with a set of seven-segment digit elements, a plurality of fixed graphics **616** which can be selectively enabled and a bit-mapped display field **618**. A wide variety of display layouts and elements are possible. For example, in an alternate embodiment, the seven-segment digit elements can be replaced with a graphic representation of an analog-type clock face. The display **610** can be implemented in a known way using LCD technology and is preferably back-lit.

[**0076**] The buttons **622-626** are used to move a cursor and/or navigate through graphics, menus, etc. displayed on the display **610**. The buttons **607** are used for conventional alarm clock functions such as snooze, alarm set, etc.

[**0077**] **FIG. 7** shows a block diagram of the major functional elements of the clock **60**. A modem **212**, or the like, is included to allow the clock to communicate over telephone lines. A PLC interface **210** allows the clock to communicate with other PLC devices over power lines. The microcontroller **205** controls the display **610** and receives inputs from the buttons **607** and **622-626**. The alarm clock **60** may also include an IR interface **280** for communicating with wireless devices. A sound generating device **265**, such as a loudspeaker, piezoelectric element or the like, is controlled by the microcontroller **205** to produce various sounds such as alarms, prompts, key clicks, etc. The alarm clock **60** may also include a radio circuit (not shown) so as to act as an alarm clock radio.

[**0078**] As discussed, the clock **60** may operate in a standalone capacity as an alarm clock or may serve as a controller in an appliance communication and control system of the present invention. As a controller, the clock **60** performs many of the same functions as the console **50**. In addition to providing a user interface, the clock **60**, like the console **50**, provides a communications interface to external networks, such as the telephone network and the Internet, via its telephone connection. Among other functions, the alarm clock **60** can obtain the correct time and software updates by dialing a predetermined telephone number or accessing an appropriate website upon start-up and/or periodically. Once it has obtained the correct time, the alarm clock **60** can cause all of the other devices in the system with clock functions (e.g., coffee maker, stand mixer) to set their clocks accordingly.

[**0079**] Like the console **50**, the alarm clock **60**, as a system controller preferably has extensive communications capabilities. For example, the alarm clock **60** can preferably be accessed directly over the Internet, it can generate and transmit e-mail alerts over the Internet, etc. In an exemplary embodiment, the alarm clock **60** can access the Internet through a portal that supports a lower level protocol, performs the translations required to access the desired information on the Internet through higher level protocols such as TCP/IP, HTML and the like, and also packages gathered information in a form that is most appropriate to send back to the alarm clock. This is similar to what has already been done to support small screen devices such as the 3Com Palm VII which has a cellular wireless Internet connection capability.

[**0080**] The clock **60** can also be used to display status information for the various devices in the system. For example, if the battery level of a smoke detector **74** has fallen below a safe level, a status message will be sent from the smoke detector (via the PLC/wireless bridge **70**) to the clock **60** informing the clock of this condition. The clock **60** can then display a graphic on the display **610** indicating that a smoke detector needs new batteries and identifying the particular smoke detector.

[**0081**] In another typical application, for example, if a smoke detector **74** has detected the presence of smoke, an alarm message will be sent from the smoke detector (via the PLC/wireless bridge **70**) to the clock **60** informing the clock of this condition. The clock **60** can then display a graphic on the display **610** indicating that a smoke detector has been activated and identifying the particular smoke detector. The alarm clock **60** can also generate an alarm, synthesized voice message, or the like via its speaker **265**. In addition, the alarm clock **60** may place a telephone call to one or more pre-programmed telephone numbers (e.g., monitoring service, user's cell phone) with a synthesized voice message (or coded digital data, if dialing into an automated monitoring service) informing the called party of the alarm condition.

[**0082**] The alarm clock **60** can also perform some of the informational and organizational functions described above in connection with the kitchen console **50**, to the extent allowed by the alarm clock's more limited capabilities. For example, the alarm clock **60** can provide access to a proprietary news service, whereby news headlines of interest to the user, local weather and traffic conditions, etc. could be downloaded by the clock during the night so that the user can quickly browse this information on the clock display in the morning upon waking. Furthermore, the clock can modify its or the system's operation in accordance with the information received. For example, if weather or traffic conditions indicate a longer than normal commute time for the user, the alarm clock can be programmed to automatically wake the user earlier to still be able to arrive at work on time. The alarm clock **60** can also be programmed to advance the activation of the coffee maker **54**, accordingly.

[**0083**] COFFEE MAKER

[**0084**] **FIG. 8** shows a block diagram of an exemplary embodiment of a coffee maker **54** in accordance with the present invention. As shown in **FIG. 8**, the coffee maker **54** comprises a PLC interface **210** coupled to a microcontroller **205**. The microcontroller **205** receives inputs from a set of buttons or switches **252**, and controls a display **262**.

[**0085**] As with conventional coffee makers, the coffee maker **54** comprises a heater **810** and a water reservoir **820**. The heater **810** is powered by heater control circuitry **242**

which is controlled by the microcontroller **205**. The reservoir **820** is provided with a water sensor **232**. The water sensor **232** senses whether there is a predetermined quantity of water in the reservoir **820**. The sensor **232** can be implemented in a variety of known ways (e.g., capacitive, conductive, etc.) The sensor **232** is preferably placed at a level in the reservoir **820** which ensures that a desired minimum amount of water (e.g., four cups) is present in the reservoir **820** before a brew cycle is initiated.

[**0086**] In an exemplary embodiment, the sensor **232** comprises two electrical conductors that project into the reservoir **820**. The impedance between the conductors varies depending on the presence of water at the conductors. A circuit **235** senses the impedance across the two conductors and provides a binary signal to the microcontroller **205** in accordance with the sensed impedance. The binary signal thus provides an indication of the absence or presence of water in the reservoir **820**.

[**0087**] In accordance with messages received via the PLC interface, the microcontroller **205** of the coffee maker can control the activation or deactivation of the heater **810**, thus controlling the start or finish of a brewing cycle. Via the PLC interface, the coffee maker **54** can be commanded to immediately begin or end a brew cycle or it may be commanded to begin or end a brew cycle at a specified future time.

[**0088**] The microcontroller **205** can transmit messages via the PLC interface **210** indicating the progress of a brewing cycle and the presence of water in the water reservoir **820**.

[**0089**] Before initiating a brewing cycle, the coffee maker **54** preferably will take into account the status of the water reservoir. If the coffee maker **54** receives a command via the PLC interface to begin a brewing cycle while the sensor **232** indicates that the reservoir does not contain a minimum amount of water (e.g., four cups), the microcontroller **205** can override the command and keep the heater **810** off. The coffee maker **54** can also transmit a message to the system controller (e.g., console **50**) indicating that the water reservoir **820** does not contain the minimum quantity of water and that the requested brew cycle will not be initiated. The system controller, in turn, can indicate the low-water condition to the user, thereby prompting the user to refill the reservoir **820**. Once the reservoir is refilled, the brewing cycle request can be automatically reinstated or the user can be required to request the brewing cycle anew.

[**0090**] In an alternative embodiment (not shown) the coffee maker **54** may be coupled to a water source, such as a household water supply line, and may draw water as needed. If the coffee maker receives a command to begin a brew cycle (immediately or at a future time) and the water level in the reservoir is low, the coffee maker can draw water from the supply line to fill the reservoir before beginning the brew cycle. In this embodiment, a solenoid valve (not shown) or the like is included between the water source and the reservoir **820** and is controlled by the microcontroller **205**. A second water sensor (not shown) is preferably included at or near the top of the water reservoir **820** and is coupled to the microcontroller **205** so as to inform the microcontroller when the reservoir **820** is full and thus to shut off the solenoid valve.

[**0091**] In yet a further exemplary embodiment, the coffee maker **54** may comprise means for detecting the presence of grounds in the brew basket and for determining if the grounds have already been used. Such means can include a sensor for weighing the brew basket. A brew basket containing used grounds, which are typically wet, weighs more than the brew basket with dry, unused grounds, which in turn weighs more than the brew basket when empty. By thus weighing the brew basket, a determination can be made as to the presence and state (e.g., wet or dry) of grounds in the brew basket.

[**0092**] As with other appliances in accordance with the present invention, the coffee maker **54** can also be operated in a stand alone mode. A control panel comprising buttons **252** and a display **262** are used for this purpose and thus provide a standard set of functions such as a timer/clock, "ON/OFF", "set delayed brew time", etc. The display **262** may also be used to display status information (e.g. "BREW LATER", "ADD WATER"). The buttons **252** can also be used to override remote PLC control of the coffee maker **54** or to re-program the coffee maker locally.

[**0093**] An additional indicator **253** (or the display **262**) can be used to indicate the communications status of the coffee maker **54** over the PLC interface. If there is a controller **50**, **59**, **60** present on the same wiring **27**, the microcontroller **205** will turn on the indicator **253**. During actual communication, the microcontroller **205** can cause the indicator **253** to flash. The microcontroller **205** will keep the indicator **253** off if there is no system controller **50**, **59**, **60** present or if there is an error condition. If there is an error condition, additional information can be provided by the display **262** or on the display of the system controller.

[**0094**] MIXER

[**0095**] **FIGS. 9A, 9B** and **10** are directed to an exemplary embodiment of a mixer appliance **52** in accordance with the present invention.

[**0096**] **FIG. 9A** shows an exemplary control panel **520** for a mixer appliance **52** of the present invention. The control panel **520** comprises a display **561**, one or more indicators **562**, a plurality of buttons **551** and a dial **553**. The mixer **52** can be controlled entirely from the control panel **520**, as in a stand-alone mode, from the console **50**, as in a control and communications system of the present invention, or via an IR interface **280**. The IR interface **280** can be used, for example, to communicate with a PDA. The mixer **52** can also operate in an automatic or manual mode from either the control panel **520** or from the console **50**. Typically, however, the mixer **52** will be operated in a manual mode from the control panel **520** and automatically from the console **50**.

[**0097**] A schematic block diagram of an exemplary circuit for a mixer appliance **52** is shown in **FIG. 10**. Like other PLC appliances of the present invention, the mixer **52** comprises a microcontroller **205** coupled to a PLC interface **210**. The microcontroller **205** is coupled to and controls the display **561** and indicators **562** on the mixer's control panel **520**. The microcontroller **205** is also coupled to and receives inputs from the buttons **551** and the dial **553** on the mixer's control panel. The position of the dial **553** can be detected using a variety of known techniques, such as optical encoding. An encoder **555** is coupled to the microcontroller **205** to provide an indication of the position of the dial **553**.

[**0098**] The mixer **52** comprises a motor **525** for driving one or more mixing blades **527**, or the like, for processing

food material in the mixing bowl **530**. The motor **525** is driven by a motor control and monitoring circuit **241** under the control of the microcontroller **205**. In an exemplary embodiment, the motor **525** is an alternating current (AC) motor. The motor control circuit **241** monitors the speed of the motor **525** via a tachometer input provided by a sensing device **243**, such as a hall effect device. In accordance with control signals from the microcontroller **205**, the motor control circuit **241** controls the speed of rotation of the motor **525** by varying the duty cycle over which power is applied to the motor. The motor control circuit **241** also includes current and back-EMF sensing circuitry to determine the load and torque being produced by the motor. This motor control circuit **241** generates a digital signal indicative of the torque, which signal is provided to the microcontroller **205**. The speed control and torque sensing features of the control circuit **241** can be implemented in known ways.

[**0099**] The microcontroller **205** can control the mixer motor **525** in accordance with inputs to the control panel **520**, messages received by the mixer over the PLC and IR interfaces or a program being executed by the microcontroller. For example, a user, via the control panel **520** can manually start or stop the mixer motor or specify a duration of operation and can also set the speed of operation using the dial **523**. Via the control panel **520**, console **50** or PDA, a user can access a timer function which allows the user to specify a start and stop time or a start time and a duration of operation. The timer function allows the user to set up the mixer **52** to perform a lengthy mixing process (e.g., beat eggs for 15 minutes), while freeing the user to perform other tasks without requiring the user's attention to the state of the mixer.

[**0100**] Messages from the console **50** received over the PLC or IR interface can command the mixer motor to start immediately or at some future time or to stop immediately or at some future time, and can also specify a speed setting (if none specified, the dial setting or some default setting can be used). Even while the mixer is under the control of the console **50**, the dial **523** can be used to fine-tune the speed of the mixer motor **525** about the speed specified by the console **50**. The user may override the remotely set power level or mix timer by manually adjusting the level control or timer settings, even while the mix cycle is progressing.

[**0101**] To prevent inadvertent starting of the mixer (either remotely or locally), the mixer **52** may also be configured so as not to allow programming of the mixer to start at some future time. It may also be desirable not to allow any starting of the mixer remotely, such as from the console **50**.

[**0102**] The microcontroller **205** can also provide a soft start/stop feature to prevent splatter and to improve the longevity of the motor **525** and the components driven thereby. The microcontroller **205**, via the control circuit **241**, can gradually ramp-up or ramp-down the speed of the motor **525** in accordance, for example, with a speed profile stored in the mixer's memory.

[**0103**] Providing the microcontroller **205** with torque information for the motor **525** allows the microcontroller to detect a variety of conditions and to control the motor **525** accordingly. For example, if the mixer blade **525** is jammed due to an obstruction, the current drawn by the motor **525** will rise rapidly. Upon detecting this condition, the microcontroller **205** can control the motor control circuitry **241** to remove power from the motor **525**.

[**0104**] The torque information can also be used to detect changes in the condition of the material being mixed. For example, the mixer **52** may be in the process of executing a recipe step (e.g., "MIX UNTIL A UNIFORM CONSISTENCY") that has been downloaded from the console **50** to the mixer over the PLC interface or input locally via the mixer's control panel **520**. Until a uniform consistency is achieved, the torque of the motor **525** will vary over some initial range as the mixer blades **527** randomly encounter areas within the material having different consistencies. Once uniform consistency has been achieved, however, the torque of the motor **525** and thus the current drawn by the motor will become relatively constant. Upon detection of this condition (e.g., by comparing successive current measurements), the microcontroller **205** can control the motor **525** to stop.

[**0105**] The exemplary mixer of FIGS. **9-10** includes a weight measurement capability. As shown in **FIG. 9B, a** plurality of weight sensors **535** are arranged on the base **910** of the mixer **52**. In the exemplary embodiment shown, a sensor **535** is arranged between the base **910** and each of four feet **915** arranged on the base **910** of the mixer. A variety of pressure sensitive sensors such as piezoelectric sensors, strain gauges, load cells or load cells with integral strain gauges can be used for the sensors **535**. Moreover, different numbers of sensors (e.g., one or more) and arrangements of sensors are possible. Known weighing arrangements and components such as are used in conventional digital scales can also be used.

[**0106**] The signals generated by the sensors **535** are processed by a circuit **231** which generates a digital signal representative of the weight sensed by the sensors at the base of the mixer. In an exemplary embodiment, the circuit **231** comprises an analog multiplexer **537** and a 22-bit A/D converter **237** which provides the microcontroller **205** with periodic samples of the weight measured at each of the four sensors **535**. The microcontroller **205** adds the four measurements to obtain a total weight of the mixer **52** (including the contents of the mixing bowl **530**). To reduce the effects of mechanical and electrical noise, the microprocessor **205** preferably adds the readings and averages and filters successive readings. The optimum sample rate and filter specifications depend on the mechanical and electrical specifics of the appliance.

[**0107**] The provision of weight information to the microcontroller **205** can be used for a variety of purposes. In one mode, a user can initiate an operation to weigh a batch of material by pressing a button **551** (e.g., "ON/Clear") on the control panel **520**. The microcontroller **205** determines the sensed weight at the time of the button press (the "initial weight") and zeros the scale reading displayed on the display **561**. As the user adds the material to be weighed to the mixing bowl **530**, the display **561** provides a running display of the currently measured weight above the zero setting (i.e., the initial weight, the weight that was measured the last time the "ON/Clear"button was pressed). An additional button (e.g., "Units") allows the user to select English or metric units of measurement.

[**0108**] In another operating mode, the weighing function may be used in carrying out a step of a recipe. For example, a recipe downloaded from the Internet by the kitchen console **50** may include a step such as "ADD TWO CUPS

OF BROWN SUGAR". Using a database of densities of commonly used ingredients, the kitchen console **50** looks up or calculates the weight of two cups of brown sugar and provides that information along with the recipe step to the mixer **52** over the PLC interface. The mixer **52** may also be capable of storing a smaller database of the more commonly used ingredients in order to perform such a conversion calculation when used in a stand-alone mode. Upon receiving the recipe step message from the console **50**, the mixer first obtains an initial weight measurement using the sensors **535**, and then prompts the user, via the display **561**, to pour two cups of brown sugar into the mixing bowl **530**. As the user pours the brown sugar into the mixing bowl, the display **561** provides a running indication of how much of the two cups of brown sugar the user has poured using an appropriate graphic representation such as a bar graph, pie chart and/or a numerical indication (e.g., percentage, weight, cups, etc.) Once the user has added the amount called for by the recipe step (e.g., two cups), an appropriate indication is generated to prompt the user to stop adding more of the ingredient. For multiple ingredients, the above procedure is repeated, with the scale zeroed between ingredients by the user or automatically (upon reaching the specified weight). When all ingredients called for by the recipe step have been added, the mixer **52** can then transmit a message to the console **50** that the recipe step has been completed. The console **50** can add a check mark next to the completed recipe step on its display and send the next recipe step to the mixer **52**.

[**0109**] The weighing feature of the mixer **52** can be used for a variety of purposes not limited to the aforementioned. For example, with the mixing bowl removed or with an appropriately adapted tray inserted, the mixer **52** can be used as a postal scale.

[**0110**] ELECTRIC BLANKET

[**0111**] **FIG. 11** shows a block diagram of an exemplary heating blanket appliance **56** in accordance with the present invention. The exemplary heating blanket appliance of **FIG. 11** comprises an interface module **560**, a dual-heating element blanket **1100**, and two controllers **1110**, **1120**, one for each heating element **1102**, **1104** of the blanket **1100**. The interface module **560** comprises a PLC interface **210**, a microcontroller **205** and a heater power control circuit **1150**. The heater power control circuit **1150** controls the application of power to each of the heating elements **1102** and **1104** in accordance with control signals from the microcontroller **205**. The microcontroller **205** can control the heating level of each element **1102**, **1104** by varying the duty cycle of the respective control signal.

[**0112**] The microcontroller **205** is coupled to the controllers **1110** and **1120** and controls the heating elements **1102** and **1104** in accordance with signals received from the controllers **1110** and **1120**. In a further embodiment, the controllers **1110**, **1120** (or the alarm clock **60**, when acting as a blanket controller, as described below) may comprise temperature sensors (e.g., thermistors) to sense ambient temperature. The ambient temperature thus sensed can be used to maintain a more consistent temperature (particularly in an open-loop system where the blanket does not have a temperature sensor).

[**0113**] Each controller **1110**, **1120** includes one or more buttons (e.g., ON/OFF, PREHEAT) and/or a dial **252** for controlling the activation and the temperature setting of the respective heating element **1102**, **1104**. Each controller also includes a display **262** and logic circuitry **1115**. The display **262** can be implemented with a back-lit LCD. The logic circuitry **1115** monitors the states of the buttons and dial **252** and controls the display **262** in accordance with the states of buttons and dial **252** and/or in accordance with signals from the interface module **560**. Thus, for example, the display **262** can be used to display a desired temperature setting as selected with the dial. The logic circuitry **1115** also communicates the button and dial information to the microcontroller **205** which controls the heater power control circuitry **1150** accordingly.

[**0114**] In a preferred embodiment, the controllers **1110**, **1120** are each coupled to the interface module **560** via a four-wire "I2C" serial interface (power, data, clock and ground), although a wireless interface (e.g., RF, IR) can also be used. Advantageously, since the controllers do not require a substantial amount of power, the four-wire interface can be implemented with thin wire. The logic circuitry **1115** can be implemented using discrete logic components, a logic ASIC or a simple microcontroller.

[**0115**] The microcontroller **205** can send and receive messages from a system controller, such as the alarm clock **60**, via the PLC interface **210**. The microcontroller **205** can thus communicate to the alarm clock **60** the activation state (i.e., on or off) of each heating element **1102**, **1104** and the temperature setting of each. The alarm clock **60** can display the state and setting of each heating blanket element. The system controller **50**, **59**, **60** can also use the electric blanket activation and setting information, for example, to control a thermostat **78** of the HVAC system so as to reduce the ambient heat when the electric blanket heating elements are on, or vice versa. Conversely, the system controller can use temperature and activation information from the thermostat **78** to control the activation and/or setting of the electric blanket heating elements. In a further embodiment, the electric blanket interface unit **560** can communicate directly with the thermostat **78** (e.g., via an RF link) without the need for a system controller.

[**0116**] The microcontroller **205** can also control the heating elements **1102**, **1104** in accordance with command messages received from the alarm clock **60**. The command messages can specify that each element **1102**, **1104** be turned on or off immediately or at some future time and can also specify the level at which to set each element. The controllers **1110** and **1120** thus can be eliminated and the user can input the desired heating blanket settings at the alarm clock **60**.

[**0117**] In a preferred embodiment, the heating blanket appliance **56** includes a pre-heat feature for each of the heating elements **1102**, **1104**. When the pre-heat feature is activated for a heating element, the respective heating element is energized at an elevated level (e.g., maximum, or several steps above the last setting) for a selected time period. At the end of this time period, the heating element will be energized at its selected setting as set via the respective controller **1110**, **1120** or via the alarm clock **60**. The pre-heat feature can be activated by pressing a dedicated button **252** on a controller **1110**, **1120** or via the alarm clock **60**. In an exemplary embodiment, the duration of the pre-heat time period can be selected by repeatedly pressing the

pre-heat key on the controller **1110, 1120** causing the display on the controller to step through a sequence of time choices until the desired choice is displayed.

Wireless Appliances and Devices

[0118] PLC/WIRELESS BRIDGE

[0119] **FIG. 12** shows the block diagram of an exemplary embodiment of a PLC/wireless bridge device **70**. As described above, the PLC/wireless bridge **70** allows wireless devices such as the scale **72**, the smoke detector **74** and the blood pressure monitor **76** to communicate with PLC devices, such as the system controllers **50, 59, 60**. The exemplary PLC/wireless bridge **70** of **FIG. 12** comprises an RF interface **270** and a PLC interface **210**, each coupled to a microcontroller **205**. The RF interface **270** can be implemented using a frequency-hopping spread-spectrum IC available from Zilog Corporation, although other implementations are possible.

[0120] The bridge device **70** may also include an IR interface **280** for communicating with other devices having IR interfaces. The wireless bridge **70** can also be integrated into the console **50** or clock **60**. The wireless bridge **70** can also communicate with other devices such as PDAs over the RF or IR interfaces or via a PDA I/O port **290**. A PDA loaded with the appropriate software in combination with the wireless bridge **70** can act as a system controller. Moreover, a PDA having a modem can provide an external connection to the internet or the like.

[0121] Additionally, the wireless bridge **70** is also capable of setting up and maintaining the wireless links between it and the wireless devices of the present invention. Upon powering up, the wireless bridge **70** listens for traffic on all of the channels provided by the aforementioned spread-spectrum technique and selects a channel that is not in use or which has the least noise. The bridge **70** will then use the selected channel to communicate with the RF devices of the present invention. Before an RF device of the present invention is first placed in service, it is programmed to communicate on the selected channel. As described more fully below, this programming can occur via the RF interface, an IR interface or via buttons on the RF device. If the bridge **70** detects that the selected channel has become unacceptable (e.g., due to noise), it will rescan and select a new channel. The other RF devices must then be informed of the new channel, as upon initial set-up.

[0122] SMOKE DETECTOR

[0123] **FIG. 13** shows a block diagram of an exemplary embodiment of a smoke detector **74** in accordance with the present invention. As mentioned, the smoke detector **74** is a wireless device which preferably communicates via an RF link with the PLC/wireless bridge **70**. As shown in **FIG. 13**, the smoke detector comprises a smoke sensor **232**, a sound generating element **265**, a status indicator **261** and an RF interface **270**. The various elements of the smoke detector are coupled to and controlled by a microcontroller **205**.

[0124] The smoke detector of **FIG. 13** is powered by one or more batteries **802**, thereby allowing it to be placed anywhere without requiring the routing of power lines thereto. The smoke detector includes a power sensing circuit **805** which monitors the condition of the battery **802** such as by sensing the voltage developed by the battery. The power sensing circuit **805** is coupled to the microcontroller **205** and provides the microcontroller with an indication of the battery's condition. The power sensing circuit **805** may be implemented and operate in a variety of well known ways. For example, the sensing circuit **805** may include an analog-to-digital converter and provide to the microcontroller a digital representation of the battery's voltage level, or the sensing circuit may include a comparator which provides a binary indication to the microcontroller whether the voltage of the battery **802** is above or below a predetermined threshold.

[0125] In the exemplary embodiment of **FIG. 13**, the RF interface **270** includes a transmitter which allows the smoke detector to transmit signals to the PLC/wireless bridge **70**. Via the RF link, the smoke detector **74** can transmit to the bridge device **70** messages indicating alarm status (i.e., the presence of a smoke condition) and battery status (e.g., an indication that the battery needs to be replaced and/or the actual voltage level developed by the battery), in addition to any other messages used by the system for administrative purposes. To save power, the RF transmitter of the RF interface **270** is on preferably only when transmitting a message. The duration of each message is on the order of 10 ms.

[0126] In addition to transmitting alarm and battery status messages, the smoke detector **74** will also preferably generate an audible smoke alarm and battery status tone from its sound generating device **265**. The battery condition can also be indicated by the indicator **261**. As such, the smoke detector **74** can be used in a stand-alone mode, similarly to a conventional smoke detector.

[0127] When the system controller receives an alarm or battery-low message from a smoke detector **74**, in addition to indicating the event at the controller (e.g., via display or sound), the controller can also generate a voice mail or email message and transmit that to a monitoring service, fire department, homeowner, etc. via the external communications interface. When the controller **50, 59, 60** receives a low-battery message from the smoke detector **74** (or any battery-powered wireless device with that capability) it can automatically generate or add to a pending shopping list the correct number and type of batteries to replace the failing batteries.

[0128] In addition to transmitting data via its RF interface **270**, the smoke detector may also be capable of receiving data, for purposes such as initial programming of the smoke detector. When initially programming the smoke detector **74**, or any other wireless device in accordance with the present invention, the smoke detector **74** is provided with the house code of the system in which it is to operate and the RF channel on which it is to communicate with the wireless bridge **70**. Additionally, it may be desirable to program each smoke detector **74** with an identifying code or name which identifies the individual smoke detector. Preferably, the identifier is descriptive to the user conveying the location of the smoke detector (e.g., "KITCHEN"). This identifier can be included in the alarm status or battery status messages transmitted by the smoke detector **74** to the PLC/wireless bridge **70**. These messages are then provided to the controller **50, 59, 60** which informs the user of the specific smoke detector which has generated an alarm or battery condition message. The programmed identifier can also be audibly

generated by the smoke detector's sound generating device **265** during an alarm or low-battery condition.

[**0129**] As an alternative to storing the user-selected identifier (e.g., location) of a smoke detector in the smoke detector, each system controller can maintain a list that associates the serial number of each smoke alarm with its user-selected identifier. This approach reduces the memory requirements of the smoke alarm so that it need only store the RF channel and housecode in its non-volatile memory to complete its installation in a home.

[**0130**] Loading data such as the aforementioned programming information into the smoke detector **74** can be accomplished in a variety of ways. In one embodiment, the RF interface **270** may include a receiver so as to provide bi-directional RF connectivity, thereby allowing the smoke detector to transmit and to receive signals to and from the PLC/wireless bridge **70**. In this case, when a smoke detector **74** is powered-up in a system of the present invention, it will scan the RF channels until it finds the channel that the wireless bridge device **70** of the system is using to communicate to the wireless devices. Establishment of the RF link can be indicated by the indicator **261**.

[**0131**] Upon establishment of an RF link between the wireless bridge **70** and the new smoke detector **74**, the wireless bridge **70** can provide the new smoke detector **74** with the house code and inform the system controller of the presence of a new smoke detector **74**, as described above. The system controller can then prompt the user to provide an identifier (e.g., "KITCHEN", "#4") for the smoke detector **74**. When the user enters the identifier at the controller, the identifier is provided to the new smoke detector **74** which stores it in its non-volatile memory. Additionally or alternatively, as above, the system controller can store the identifier in association with the smoke detector's serial number in the controller's memory.

[**0132**] In an alternative embodiment, where the RF interface **270** provides only transmitting capability, an IR interface **280** can be used to receive the programming data. Using the IR interface **280** of the console **50**, the alarm clock **60** or the wireless bridge **70**, the RF channel information, house code and smoke detector identifier can be transmitted from the system controller **50**, **59**, **60** to the smoke detector's IR interface **280** and stored in the smoke detector's non-volatile memory. In this case, the smoke detector would be held in front of the transmitting IR device, such as the wireless/PLC bridge **70**, during the programming procedure. The smoke detector would then be mounted in its intended location.

[**0133**] In yet a further alternative embodiment (not shown), the smoke detector **74** can be provided with one or more switches or buttons for entering the programming data.

[**0134**] The disclosure herein regarding the smoke detector **74** is also readily applicable to other kinds of detectors, such as carbon monoxide detectors and the like. Moreover, the start-up and programming procedures described in connection with the smoke detector **74** are also applicable to other wireless devices of the present invention. Furthermore, while the smoke detector **74** is described above as a battery-powered wireless device, as is well understood in light of the present disclosure, the smoke detector of the present invention can also be implemented with a PLC interface and be powered from household wiring.

[**0135**] BLOOD PRESSURE MONITOR

[**0136**] **FIG. 14** shows an exemplary embodiment of a blood pressure (BP) monitor **76** in accordance with the present invention. The exemplary BP monitor **76** of **FIG. 14** comprises a display and control unit **760**, which houses the circuitry for the BP monitor, and an arm cuff **770** coupled to the display and control unit **760** via an air hose **775**. A manual pump **780** may be included for inflating the cuff **770**. Alternatively, the display/control unit **760** may include an electrically operated pump to inflate the cuff **770**.

[**0137**] The control unit **760** is adapted to rest on the user's thigh and comprises positioning features **765** and a cuff holder **767** for storing the cuff **770** when not in use.

[**0138**] **FIG. 15** shows a block diagram of an exemplary embodiment of a circuit for a BP monitor **76** of the present invention. As mentioned, the blood pressure monitor **76** is an RF device which communicates via an RF link with the bridge device **70**. As shown in **FIG. 15**, the BP monitor comprises a pressure sensor **237** which is coupled to the hose **775** and senses the pressure in the cuff **770**, a display **267**, buttons **257**, a power sensing circuit **705** and an RF interface **270**. In addition to measuring blood pressure, the BP monitor **76** of the present invention can also measure pulse rate. The pressure sensor **237** is coupled to a processing circuit **1537** which generates a digital representation of the pressure sensed by the sensor **237**, which representation is provided to the microcontroller **205**. The blood pressure and pulse sensing means of the BP monitor **76** of the present invention can be implemented in known ways. The various elements of the blood pressure monitor are coupled to and controlled by a microcontroller **205**.

[**0139**] The BP monitor of **FIG. 15** is powered by one or more batteries **702**, thereby allowing it to be conveniently operated without the restrictions of a power cord. A power sensing circuit **705** monitors the condition of the battery power source **702** such as by sensing the voltage developed thereby. The power sensing circuit **705** is coupled to the microcontroller **205** to provide the microcontroller with an indication of the battery's condition. The power sensing circuit **705** may be implemented and operate in a variety of well known ways, as discussed above in connection with the smoke detector.

[**0140**] In the exemplary embodiment of **FIG. 15**, the RF interface **270** includes a transmitter which allows the blood pressure monitor to transmit signals to the PLC/wireless bridge **70**. Via the RF link, the blood pressure monitor **76** can transmit to the bridge device **70** messages including one or more blood pressure and/or pulse measurements and battery status (e.g., an indication that the battery needs to be replaced). In addition to transmitting blood pressure and pulse measurements and battery status messages, the BP monitor **76** will also preferably display the measurements and battery status on the display **267**. As such, the BP monitor **76** can be used in a stand-alone mode, similarly to a conventional blood pressure monitor. The monitor **76** can also store a plurality of measurements and display those on demand.

[**0141**] For initial programming of the BP monitor **76**, the buttons **257** can be used to enter the requisite data (e.g., house code, RF channel). As described above for the smoke detector **74**, the blood pressure monitor **76** can be provided

with an IR interface (not shown) or a bi-directional RF interface for loading programming information into the blood pressure monitor **76**.

[**0142**] In addition to performing the initial programming, the buttons **257** can be used to enter the identity of a user from whom a measurement or series of measurements have been taken. The user identifiers can be included in measurement messages transmitted by the BP monitor **76** to the RF bridge **70**. Preferably, the measurement messages also include the time and date that the corresponding measurement was made. The user identification and time/date data can also be stored by the BP monitor **76** and/or displayed on the display **267** along with the corresponding measurements.

[**0143**] Blood pressure and pulse measurement and battery status messages from the blood pressure monitor **76** are received by the PLC/wireless bridge **70** and forwarded via the PLC interface to the system controller **50**, **59**, **60**. If a message indicating a low-battery condition is received, the controller **50**, **59**, **60** can generate an appropriate indication (e.g., a flashing icon and/or sound) to the user. Furthermore, the controller **50**, **59**, **60** can display and/or log the pressure/pulse measurements received from the monitor **76**, along with the user identification and time/date information. That information can then be accessed remotely or transmitted, such as over the Internet, to a health care provider or the like. In response, the controller **50**, **59**, **60** may receive and display suggestions for altering one's diet in accordance with the reported blood pressure and pulse measurements.

[**0144**] In yet a further embodiment, the BP monitor may comprise an IR interface **280**. Data from the BP monitor can be uploaded to a PDA or to the system via an IR receiver on the system controller (e.g., the console **50** or alarm clock **60**) or on the PLC/wireless bridge device **70**.

[**0145**] FOOT SCALE

[**0146**] **FIG. 16** shows an exemplary embodiment of a foot scale **72** in accordance with the present invention. The exemplary scale **72** of **FIG. 16** comprises a display **268** and a set of buttons **258**.

[**0147**] **FIG. 17** shows a block diagram of an exemplary embodiment of a circuit for a foot scale **72** of the present invention. As mentioned, the foot scale **72** is an RF device which communicates with the system of the present invention via an RF link provided by the PLC/wireless bridge **70**. As shown in **FIG. 17**, the foot scale **72** comprises a weight sensor **238**, a display **268**, buttons **258**, a power sensing circuit **705**, an RF interface **270** and a microcontroller **205**. The weight sensor **238** is coupled to an analog-to-digital converter **738** which is coupled to the microcontroller **205**. The weight sensor **238** can be implemented, in a known way, using one or more load cells. In an exemplary embodiment, the weight sensor **238** comprises a load cell which includes a strain gauge in a bridge arrangement that generates a differential voltage which is amplified, filtered, and converted to digital form by the A/D converter **738**.

[**0148**] The foot scale **72** may also comprise an IR interface **280** coupled to the microcontroller **205**.

[**0149**] The foot scale of **FIG. 17** is powered by one or more batteries **702**, thereby allowing it to be conveniently placed and moved without the restrictions of a power cord. The power sensing circuit **705** monitors the condition of the battery power source **702** such as by sensing the voltage developed thereby. The power sensing circuit **705** is coupled to the microcontroller **205** to provide the microcontroller with an indication of the battery's condition. The power sensing circuit **705** may be implemented and operate in a variety of well known ways, as described above in connection with the smoke detector.

[**0150**] In the exemplary embodiment of **FIG. 17**, the RF interface **270** includes a transmitter which allows the foot scale **72** to transmit signals to the PLC/wireless bridge **70**. Via the RF link, the foot scale **72** can transmit to the PLC/wireless bridge **70** messages including one or more weight measurements and a battery status indication (e.g., an indication that the battery needs to be replaced). In addition to transmitting weight measurements and battery status messages, the foot scale **72** also displays weight measurements and battery status on the display **267**. As such, the foot scale **72** can be used in a stand-alone mode, similarly to a conventional foot scale. The scale **72** can also store a plurality of measurements and display those on demand.

[**0151**] For initial programming of the foot scale, the buttons **258** can be used to enter the requisite data (e.g., house code, RF channel). As described above for the smoke detector **74**, the foot scale **72** can be provided with an IR interface **280** or a bi-directional RF interface for loading programming information into the foot scale **72**. The scale **72** may also be provided with a further interface **295**, such as a parallel interface or an RS-232 serial data interface, for communicating directly with a PC for programming or measurement uploading purposes.

[**0152**] In addition to performing the initial programming, the buttons **258** can be used to identify a user from whom a measurement or series of weight measurements have been taken. In the exemplary embodiment shown in **FIG. 16**, one button **258** is assigned to each of four users. Before a user steps on the scale **72**, he can push his assigned button, thereby identifying himself to the scale (e.g., user #2). The user then steps on the scale and is weighed. The scale then displays the user's weight on the display **268** and stores the user's weight in nonvolatile memory under the user's identity. The scale can then transmit (via the wireless bridge **70**) a weight measurement message to the controller **50**, **59**, **60** with the user's identity and weight. Upon initial programming of the scale **72** or at the controller **50**, **59**, **60**, a name can be assigned to each button **258** so that each user can be identified by name, as opposed to a button number.

[**0153**] Preferably, the weight measurement messages generated by the scale **72** also include the time and date of each measurement. The user identification, time/date and weight data for a plurality of measurements (e.g., 30) can also be stored by the foot scale **72** for each of the plurality of users and uploaded to the controller **50**, **59**, **60** periodically (e.g., daily) or on command from the controller. The stored information can also preferably be retrieved and displayed locally on the display **268**. Access to the weight information of each user can also be restricted by password.

[**0154**] Weight measurement and battery status messages from the foot scale **72** are received by the PLC/wireless bridge **70** and forwarded via the PLC interface to the system controller **50**, **59**, **60**. If a message indicating a low-battery condition is received, the controller **50**, **59**, **60** can generate an appropriate indication (e.g., a flashing icon and/or sound)

to the user. Furthermore, the controller **50**, **59**, **60** can display, log, graph, etc. the weight measurements received from the foot scale **72**, along with the user identification and time/date information. That information can then be accessed remotely or transmitted, such as over the Internet, to a health care provider or the like. The controller can also use the weight information to obtain diet suggestions from the internet or to make suggestions of food items to add or substitute in a shopping list.

[**0155**] In an alternative embodiment, users can be identified by the scale by their weights. In this embodiment, the microcontroller **205** employs artificial intelligence to categorize users by their weights, e.g., the user whose weight is approximately 115 lbs. is user #1 whereas the user whose weight is approximately 175 lbs. is user #2. As each user's weight fluctuates, the scale updates the weight range associated with each user. If the weight reading is close to the recent readings for two or more users then the scale may pick the most likely match and ask the user if it is correct, or provide them with the most likely choices.

[**0156**] In yet a further embodiment, users can be identified by the scale **72** by the use of voice recognition. With this embodiment, upon stepping on the scale **72**, the user is prompted to speak his name. The scale **72** stores the user's name and associated voice print the first time the user uses the scale. When the user uses the scale again, and speaks his name again, the speech sample is compared to those stored by the scale until a match is found. If no match is found and the user spoke a name that has already been stored, the user is denied access or prompted to use another name. If no match is found and the user spoke a name that has not already been stored, the name and associated name print are stored.

[**0157**] Voice recognition has the additional benefit of serving as a form of password to prevent users from viewing other user's stored weight data.

[**0158**] In yet a further embodiment, the scale **72** comprises means for measuring the height of a user standing on the scale. The height measurement means comprises an ultrasonic (US) transmitter and receiver. The US transmitter generates a pulse which propagates upwards from the scale. In an initial calibration operation, a pulse or sequence of pulses are transmitted by the US transmitter, bounce off of the ceiling above the scale and are received by the US receiver in the scale. The round-trip travel time (i.e., the time between transmission and reception, referred to as tc) is measured and stored. In performing a height measurement with a user standing on the scale **72**, a further pulse or sequence of pulses is transmitted upwards. The time (tm) required for the pulse(s) to travel from the scale **72** up to the ceiling, bounce off of the ceiling down to the top of the user's head, bounce off of the top of the user's head back up to the ceiling, and bounce off of the ceiling back down to the scale **72** is measured. The user's height can then be readily calculated as the distance traveled by the US pulse(s) in the time period tc-tm/2.

[**0159**] The devices described herein are meant to be exemplary of the present invention and not exhaustive. Other appliances or devices that may be adapted in accordance with the present invention include toasters, breadmakers, blenders, steamers, humidifiers, irons, microwave ovens, stoves, grills, refrigerators, dish washers, washers, dryers and air purifiers.

What is claimed is:

1. A communications system comprising:

a first device, the first device including a first processor and a first power line interface coupled to the first processor and to a power distribution system; and

a second device, the second device including a second processor and a second power line interface coupled to the second processor and to the power distribution system,

wherein the first and second devices communicate with each other, under the control of the first and second processors, via the power distribution system and the first and second power line interfaces.

2. The system of claim 1, wherein the first device includes a network communications interface coupled to the first processor and to a communications network.

3. The system of claim 1, wherein the second device includes a wireless communications interface.

4. The system of claim 3, comprising:

a third device, the third device including a third processor and a further wireless communications interface coupled to the third processor, the further wireless communications interface being adapted to communicate with the wireless communications interface of the second device.

5. The system of claim 2, wherein the second device is accessible from the communications network.

6. The system of claim 4, wherein the first device includes a network communications interface coupled to the first processor and to a communications network and wherein the third device is accessible from the communications network.

7. The system of claim 4, wherein the wireless communications interface and the further wireless communications interface include radio frequency communications circuitry.

8. The system of claim 4, wherein the wireless communications interface and the further wireless communications interface include infrared communications circuitry.

9. A data communications method comprising:

selecting a code;

detecting a remote communications device;

providing the code to the remote communications device;

receiving from the remote communications device data accompanied by the code; and

ignoring data not accompanied by the code.

10. The method of claim 5 comprising:

activating the remote communications device; and

searching for the remote communications device for a predetermined time period.

12. A method of providing selected information comprising:

coupling to a communications network;

determining a state of an appliance communication system; and

receiving selected information from the communications network in accordance with the state of the appliance communications system.

13. The method of claim 12, comprising:

transmitting further information to the communications network in accordance with the state of the appliance communications system.

14. An interface bridge device comprising:

a processor;

a wireless interface; and

a power line interface, wherein the wireless interface and the power line interface are selectively coupled under the control of the processor.

15. A mixer apparatus comprising:

a motor;

a processor, the processor controlling the operation of the motor and monitoring the operation of the motor;

a power line interface, the power line interface being coupled to the processor; and

a weight sensor, the weight sensor being coupled to the processor.

* * * * *