R. BAGGALEY.

METHOD OF UTILIZING IRON, BLAST FURNACE, FLUE DUST.

APPLICATION FILED JULY 24, 1913.

1,081,921. Patented Dec. 16, 1913.

Fig. 1.

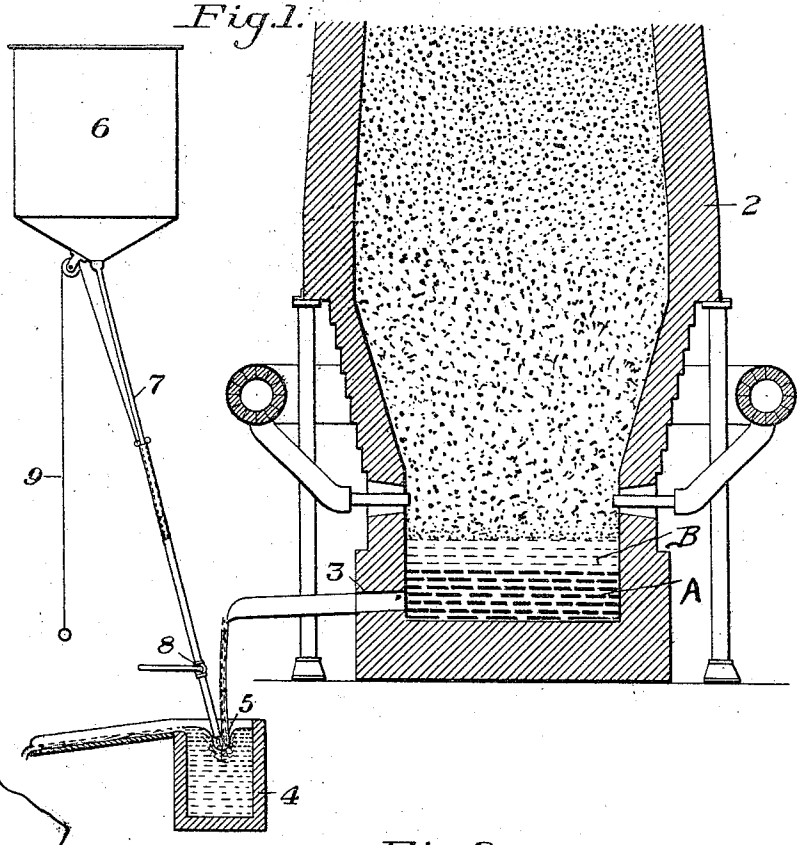

Fig. 2.

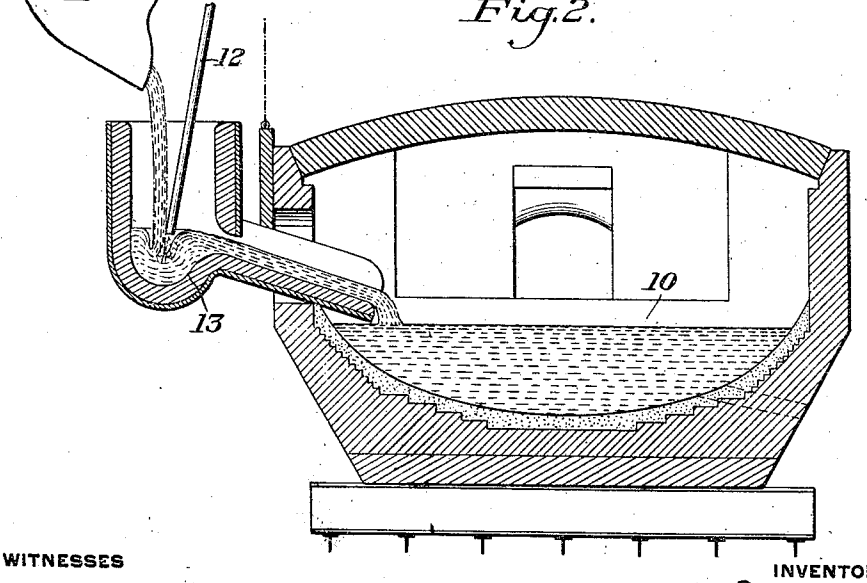

WITNESSES

R. H. Balderson

E. B. Fleming

INVENTOR

Ralph Baggaley,

by Bakewell, Byrnes & Parmelee,

his Attys.

UNITED STATES PATENT OFFICE.

RALPH BAGGALEY, OF PITTSBURGH, PENNSYLVANIA.

METHOD OF UTILIZING IRON, BLAST-FURNACE, FLUE-DUST.

1,081,921. Specification of Letters Patent. Patented Dec. 16, 1913.

Application filed July 24, 1913. Serial No. 780,949.

To all whom it may concern:

Be it known that I, RALPH BAGGALEY, a citizen of the United States, residing at Pittsburgh, Allegheny county, Pennsylvania, have invented a new and useful Method of Utilizing Iron, Blast-Furnace, Flue-Dust, of which the following is a full, clear, and exact description, reference being had to the accompanying drawings, forming part of this specification, in which—

Figures 1 and 2 are vertical sectional views illustrating different forms of apparatus which may be used for carrying out my novel method.

My invention has relation to a new and useful method of utilizing the flue dust and fines from iron-blast-furnaces, and also to the novel product obtained by such method.

In modern iron-blast-furnace practice, a very high blast pressure is used, and many of the ores employed are very friable. In the operation of the furnaces there is a heavy production of fines and flue dust. It has been estimated that every ton of iron ore smelted yields about eighty pounds of flue dust, or approximately four per cent. Thus, a blast furnace which smelts 1,000 tons of ore per day produces about 40 tons of this flue dust, which upon an average contains about four dollars of iron per ton. For many years, this material was wastefully thrown over the dumps, or used as a filling or grading material. More recently, however, it has been placed in stock piles in the hope that some efficient and economical method of its utilization might be developed. In the Pittsburgh district alone, it is estimated that an accumulation of this material amounts to 2,500 tons daily. At one point in the district there is a stock pile of this material which is estimated to contain more than one million tons; and stock piles containing hundreds of thousands of tons may be found throughout the iron and steel districts of the United States. Many attempts have been made to utilize this material, but it is, I believe, admitted generally by experts in this art that the problem is today unsolved. These attempts have mainly been confined to briqueting or sintering the material. Both these methods require expensive preliminary concentration, and the expense of installation and operation of the necessary apparatus is too great to render the methods profitable. Briqueting requires the use of some bonding agent to hold the particles together; and when the briquet becomes heated in the furnace in an attempt to smelt it, the bonding agent is destroyed; the particles are then reduced to dust before they can be melted, and a greater or less percentage of such particles is again carried over by the blast and must be recaught and rebriqueted. If the particles be fused, or partly fused, as in the Gröndahl process, the percentage of loss is still high, and the expense of the installation and operation of the necessary plant is increased.

When sintering is resorted to, the coke in the flue dust must be eliminated, or at least reduced to about two per cent. before it can be sintered, and there is the same heavy percentage of loss. Furthermore, to the cost of sintering or briqueting the cost of resmelting must be added.

My invention provides a very simple and efficient method for utilizing this material in a practical and economical manner, with very little, if any, increased cost for plant installation and operation. It obviates the necessity for preliminary concentration; it enables the coke and limestone contained in the dust to be beneficially utilized; and has many other advantages which are hereinafter described.

In my Patent No. 900,467, of October 6th, 1908, I have described and claimed a method of recovering practically all the values contained in fines, flue dust and concentrates resulting from the treatment of copper, gold and silver ores. This method consisted in intermingling the flue dust or fines from the smelting furnaces in a molten bath of copper matte, the matte forming a holding medium for the fines, flue dust and concentrates. This method has been successfully used where other processes have failed, especially in treating zincy copper concentrates and fines. I have now discovered that a similar method may be applied to the utilization of iron-blast-furnace flue dust and fines. For this purpose I use a bath of molten pig iron, preferably directly as it is drawn from the furnace, as the holding medium for the material under treatment. I mingle this material in the molten bath of pig iron preferably to a point short of solidification, in any suitable mixing device; and then pass them in this mixed or mingled condition either to the pig bed: to a pig molding machine; to a mixing tank; or directly, in a molten condition, to Bessemer converters; to open hearth

or Talbot furnaces; or to electric furnaces, in any of which the refining process is continued to the final stage. I may also effect the mixing directly in the furnace, as for instance in an open hearth furnace.

In carrying out my invention, the heavy molten pig iron is preferably allowed to drop, say from four to six feet, or such a distance as will produce a suitable vortex in the bath which is contained in the mixing vessel. A vortex of about fifteen inches in depth can be maintained by a drop of about six feet. The flue dust material is then discharged by suitable means, some distance within this vortex, the material being allowed to flow in a steady stream to the bottom of the vortex, and the flow being so regulated that the material will not accumulate to a depth of more than about five inches at the bottom of the vortex. I do not, however, limit myself to this particular mode of mixing. It has the advantage, however, that it does not permit any of the particles of the material to escape; but, on the contrary, the heavy falling liquid bath steadily carries the light fines down into the bath and mingles them thoroughly through it so that they cannot escape during subsequent treatment, by floating them in an unfused condition on the surface. This also avoids all trouble from air globules surrounding the particles and floating them to the surface, and the cost is very small. If necessary, the material may be preliminarily screened for the removal of larger lumps which might interfere with its proper flow into the mixing bath; and it may also be dried, if necessary, so as to make it flow more freely.

Some flue dust contains impurities and very lean substances which will yield little or no value. If desired, these may be submitted to a suitable preliminary concentration process. This, however, is purely a commercial question, depending on whether or not this preliminary concentration is profitable for the particular material in question.

I do not recommend that pig iron intended to be simply remelted for foundry and similar purposes be used for the purpose herein contemplated, although it may be within the broad scope of my invention and claims.

I also do not limit myself to the flow of molten iron from a blast furnace as the original source of supply. Any molten metal from any source may be used, in any desired manner. From an economical standpoint, it is preferred that each separate blast furnace recover the values from its own production of flue dust and ore fines as rapidly as these be made, and preferably with each cast. When, however, the furnace is engaged solely in making foundry irons, or iron that is intended solely for re-melting, it may be preferable to arrange for the utilization of the flue dust in connection with the pig iron from other furnaces, or by mingling it in molten steel.

In Fig. 1 of the accompanying drawings, I have illustrated, largely diagrammatically, an arrangement of apparatus which may be employed to enable each furnace to take care of its own flue dust product. In this figure, the numeral 2 designates a portion of an ordinary blast furnace having the usual tap-out 3. A designates the body of molten metal and B the body of molten slag above the metal. 4 is a forehearth or other receiving vessel into which the molten metal flows from the tap-out, and through a sufficient distance to create a vortex such as indicated at 5 in said vessel. 6 is a bin or receptacle of any suitable character, to which the flue dust or the fines are supplied, and from which it flows through the pipe 7 into the vortex 5. This pipe is preferably provided with a controlling valve 8, by which the flow can be regulated; and it may also be conveniently made in telescopic sections with suitable means, such as the cord and pulley 9, for moving one of the sections upon the other to properly adjust the point of discharge at the lower section.

In Fig. 2 I have shown apparatus which may be used for carrying out my improved method in connection with an ordinary open hearth furnace. In this figure, the numeral 10 indicates the hearth portion of the furnace, which is shown as being supplied with molten pig iron from a ladle 11. 12 designates the pipe through which the flue dust and fines are being discharged into the runway 13. In this manner the dust and pig iron are thoroughly commingled in entering the furnace.

As above stated, the mixing operation can be carried out in various other ways. The impurities contained in the flue dust are not detrimental, but are in effect to a considerable extent useful, since they consist largely of coke and limestone, and the coke is useful by reason of its fuel values, and the limestone by reason of its action as a flux. Ordinary coke pig iron used in the manufacture of steel contains approximately 28 per cent. of impurities which must be eliminated in making steel.

The flue dust contains approximately 30 per cent. of pure iron, nearly 70 per cent. of coke particles, and a small percentage of limestone, all of which are parts of the original furnace charge. In my present invention all of these are useful, as above explained, and consequently the percentage of actual impurities added to the 28 per cent. already existing in the pig iron itself, is infinitesimal, and adds nothing to the cost of refining.

Molten pig iron can be made to take up

flue dust and fines in the manner described in sufficient quantities to not only take care of current production but also to permit of the gradual reduction of any accumulated stock.

What I claim is:—

1. The herein described method of utilizing flue dust and fines from iron blast furnaces, which consists in introducing the dust and fines into a sufficient body of molten iron or steel to cause them to be enveloped by the iron or steel and thoroughly mingled therewith; substantially as described.

2. The herein described method of utilizing the flue dust and fines from iron blast furnaces, which consists in mingling the flue dust or fines with molten metal to a point short of solidification, and then subjecting the mixture to a refining action; substantially as described.

3. The herein described method of utilizing flue dust and fines in iron blast furnaces, which consists in flowing molten iron into a receiving vessel, and at the same time introducing into the molten metal the flue dust and fines; substantially as described.

4. The herein described method of utilizing the flue dust and fines of iron blast furnaces, which consists in first subjecting the material to a preliminary separating operation, and then introducing it into a sufficient body of molten iron or steel to cause the dust to be enveloped by the iron or steel and thoroughly mingled therewith; substantially as described.

5. The herein described method of utilizing the flue dust and fines of iron blast furnaces, which consists in introducing the dust and fines within a body of molten metal while the metal is in a condition of movement by causing the material to be enveloped by the molten metal, and thereby effect a thorough mingling of the dust and fines with the molten metal; substantially as described.

6. The method of recovering values from iron-blast-furnace flue dust, ore fines, and concentrates, which consists in introducing such material into a sufficient body of molten pig iron to cause the material to be enveloped by the iron or steel and thoroughly mingled therewith, and utilizing the particles of carbon and lime contained in such material as fuel and flux elements, respectively, in the treatment of the pig iron; substantially as described.

7. The method of recovering values from iron-blast-furnace flue-dust, ore fines, and concentrates, which consists in introducing such material into a falling stream of molten pig iron preparatory to further treatment in the process of making steel; substantially as described.

8. The method of recovering values from iron blast furnace flue dust, ore fines and concentrates, which consists in pouring hot metal from one vessel into a second vessel to produce a vortex in the hot metal in the second vessel, and simultaneously introducing such material into the vortex to draw the material into the molten mass; substantially as described.

9. The method of recovering values from iron blast furnace flue dust, ore fines and concentrates, which consists in pouring hot metal from one vessel into a second vessel, and simultaneously introducing such material into the vortex below the top of the metal in said vessel; substantially as described.

10. The method of utilizing flue dust and fines of iron blast furnaces, which consists in delivering and enveloping said material within a moving mass of molten iron or steel to thoroughly mix such material with a molten iron or steel and hold it in suspension therein for subsequent treatment; substantially as described.

In testimony whereof, I have hereunto set my hand.

RALPH BAGGALEY.

Witnesses:
GEO. H. PARMELEE,
H. M. CORWIN.

Copies of this patent may be obtained for five cents each, by addressing the "Commissioner of Patents, Washington, D. C."