US 20150208734A1

(19) **United States**

(12) **Patent Application Publication**

(10) **Pub. No.: US 2015/0208734 A1**

(43) **Pub. Date: Jul. 30, 2015**

CALLAHAN

(54) **TOPS AND DRESSES WITH HIDDEN CONTROL LINING**

(71) Applicant: **Lysse Partners LLC**, Indianapolis, IN (US)

(72) Inventor: **Nicole CALLAHAN**, New York, NY (US)

(73) Assignee: **LYSSE PARTNERS LLC**, Indianapolis, IN (US)

(21) Appl. No.: **14/587,457**

(22) Filed: **Dec. 31, 2014**

Related U.S. Application Data

(60) Provisional application No. 61/931,386, filed on Jan. 24, 2014.

Publication Classification

(51) **Int. Cl.**

A41C 3/08 (2006.01)

A41D 1/22 (2006.01)

(52) **U.S. Cl.**

CPC ***A41C 3/08*** (2013.01); ***A41D 1/22*** (2013.01)

(57) **ABSTRACT**

A garment with shaping benefits is provided. In one aspect, the garment may comprise an outer layer configured as a dress and an inner shaping layer comprising a front panel and back panel. The front panel may comprise a first portion to attach the inner shaping layer to the outer layer on the front and a second portion to provide a shaping benefit. The back panel may be attached to the outer layer on the back and also provide a shaping benefit. The inner shaping layer may not be visible from the outside of the outer garment. In certain aspects, the garment may be an upper body garment, such as a shirt dress. In some other aspects, the garment may be a full body garment, such as a skirt dress.

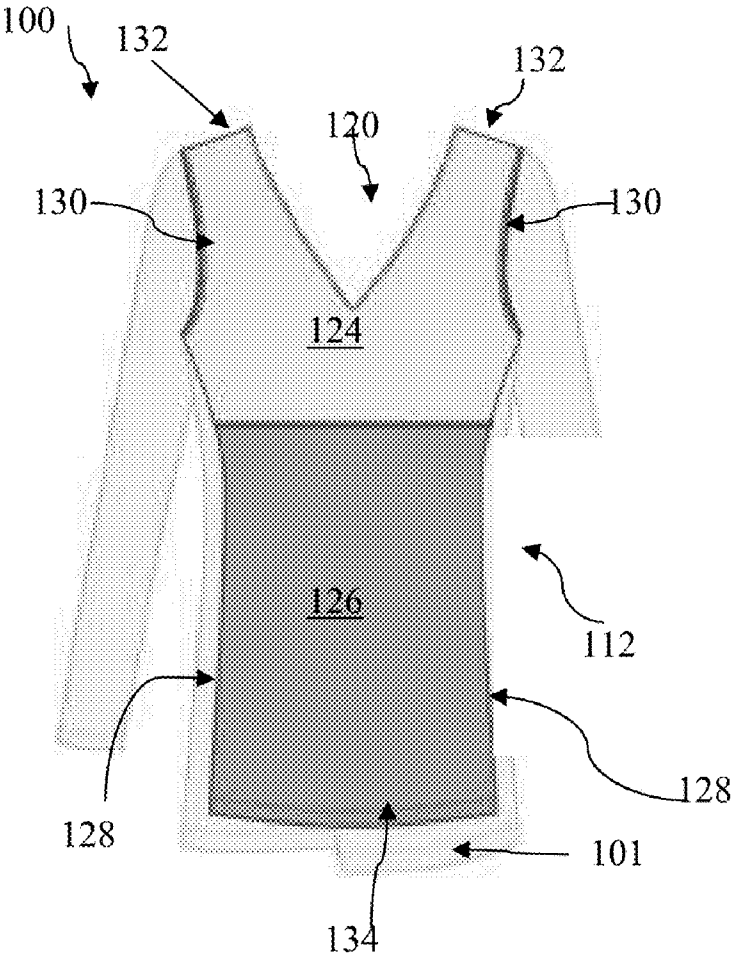

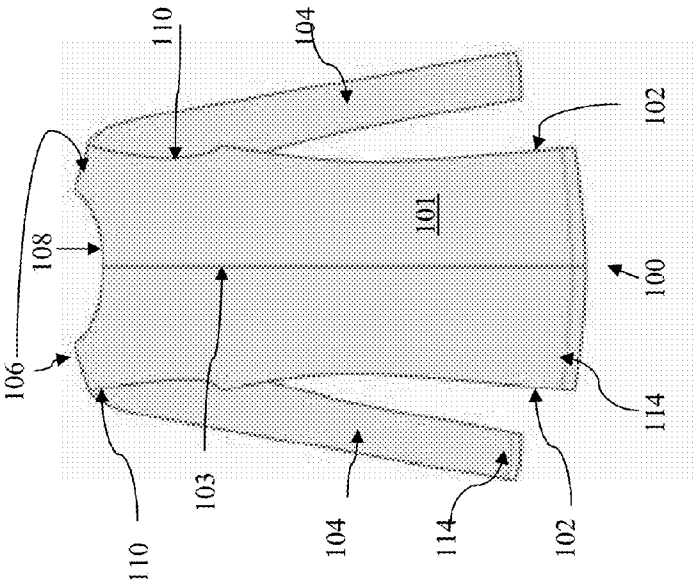
110
104
102
108
101
100
106
114
103
104
114
102
110

FIG. 1B

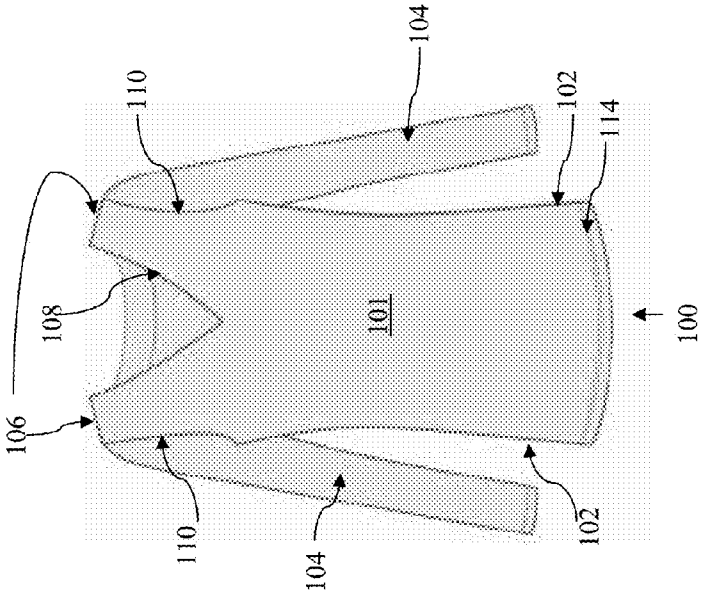
104
110
102
114
108
101
100
106
110
104
102

FIG. 1A

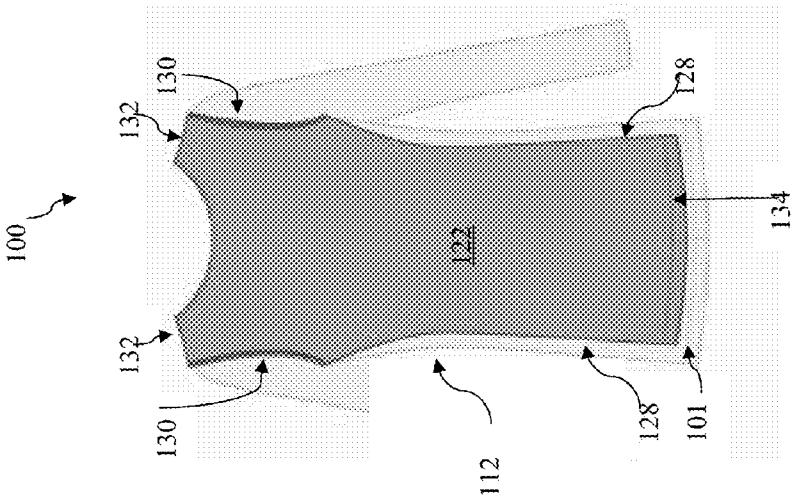
100
130
132
132
130
122
128
134
112
128
101

FIG. 1D

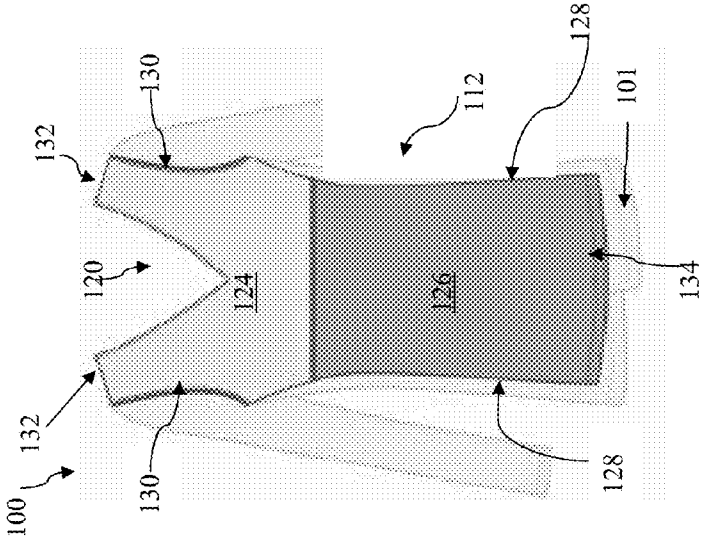
100
132
130
120
124
132
130
112
128
101
126
134
128

FIG. 1C

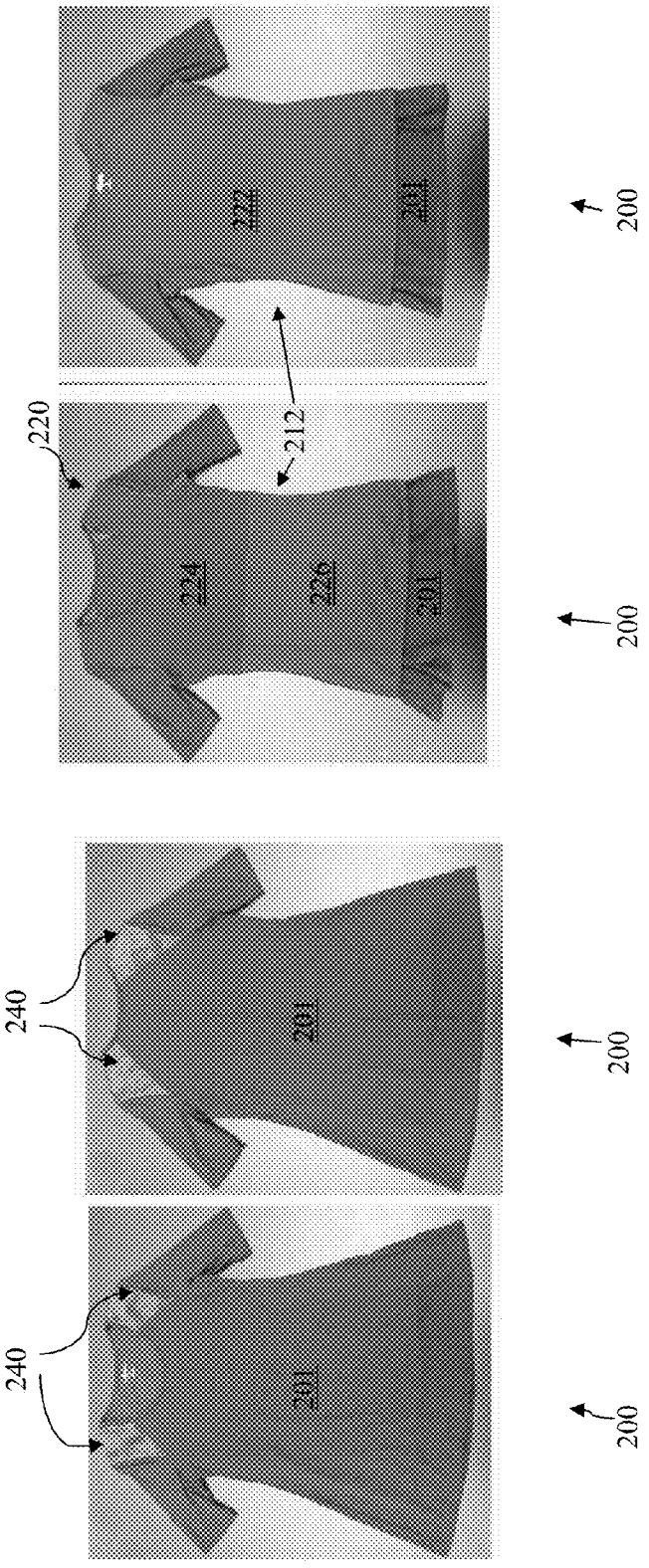

FIG. 2

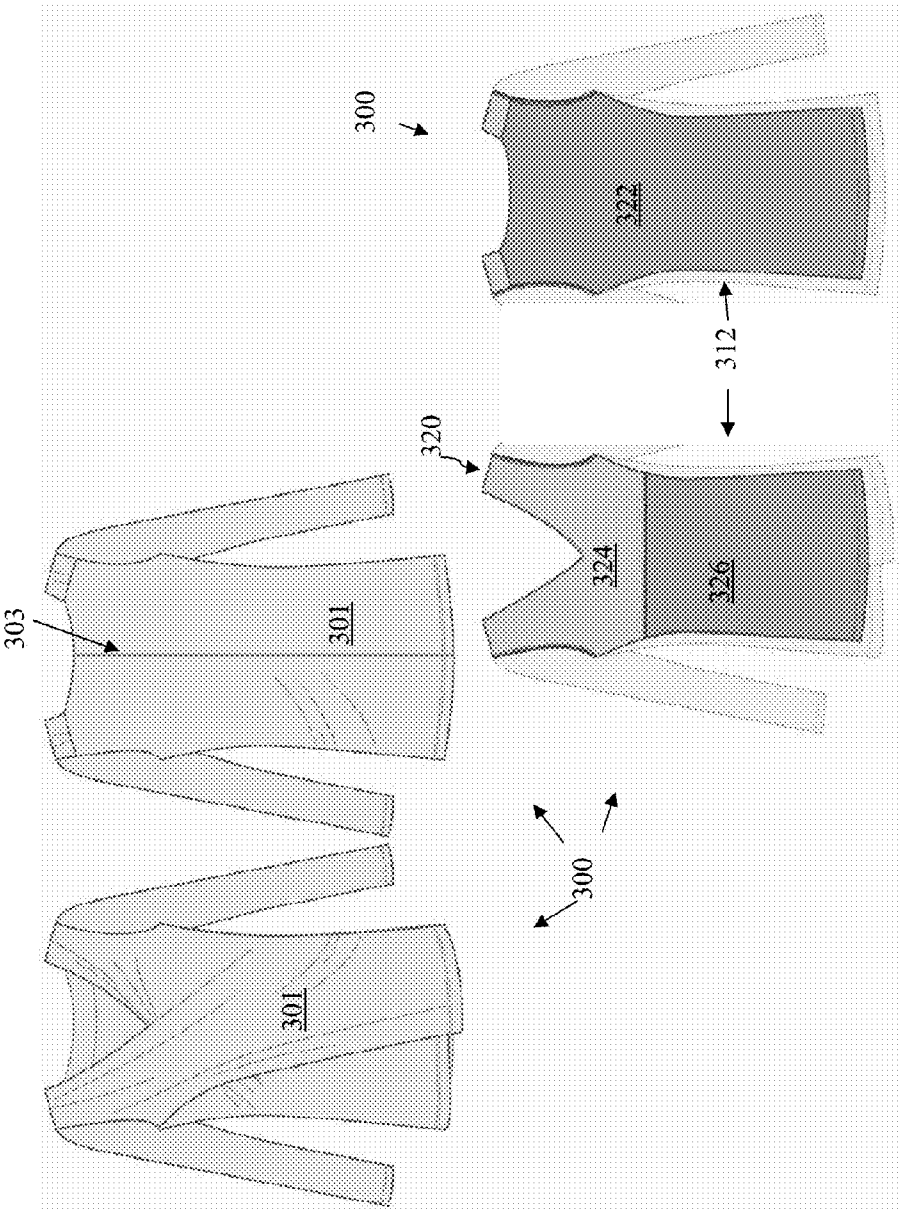

FIG. 3

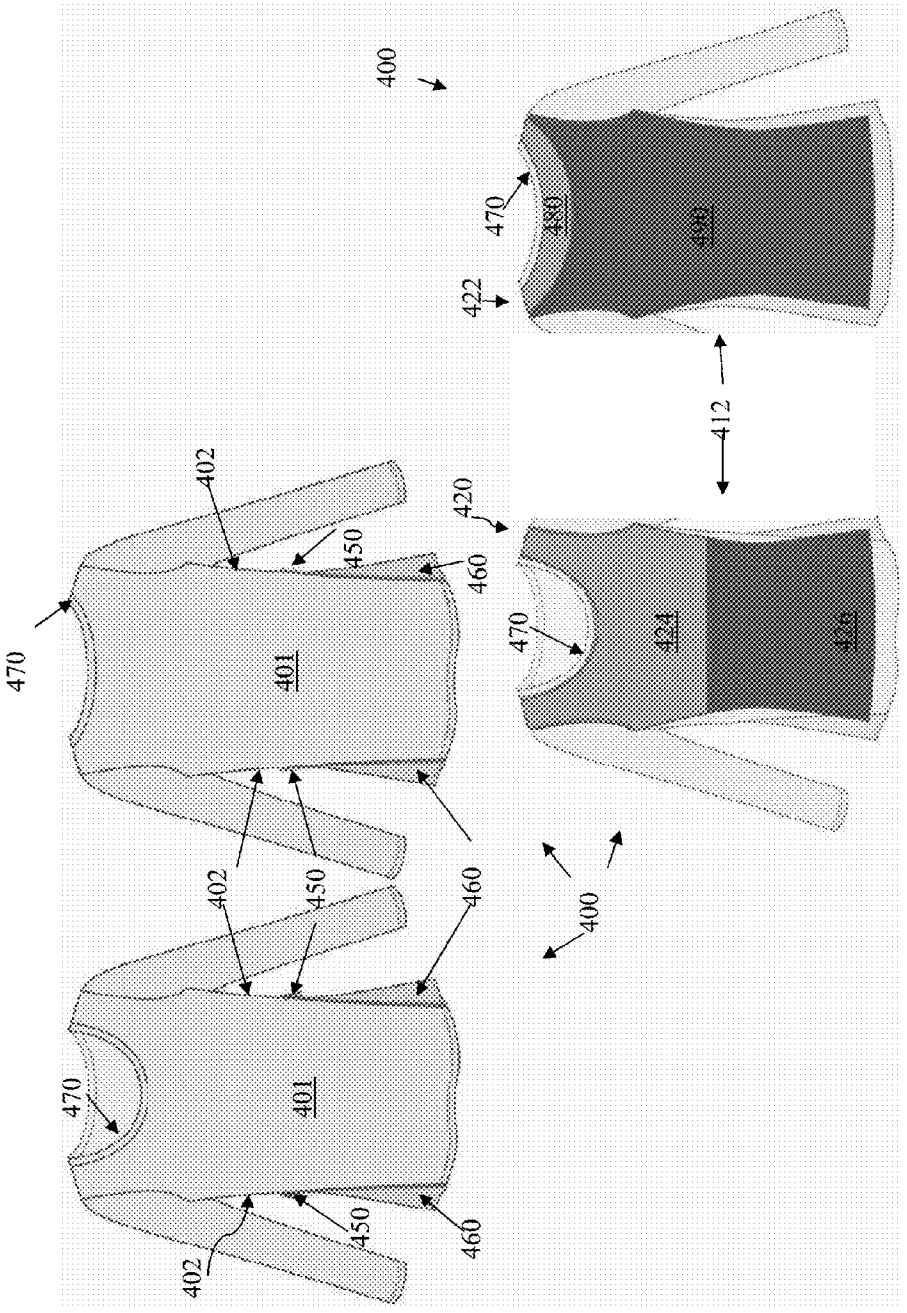
400
470
480
490
422
412
420
470
424
426
402
450
460
401
470
402
450
460
400
470
401
402
450
460

FIG. 4

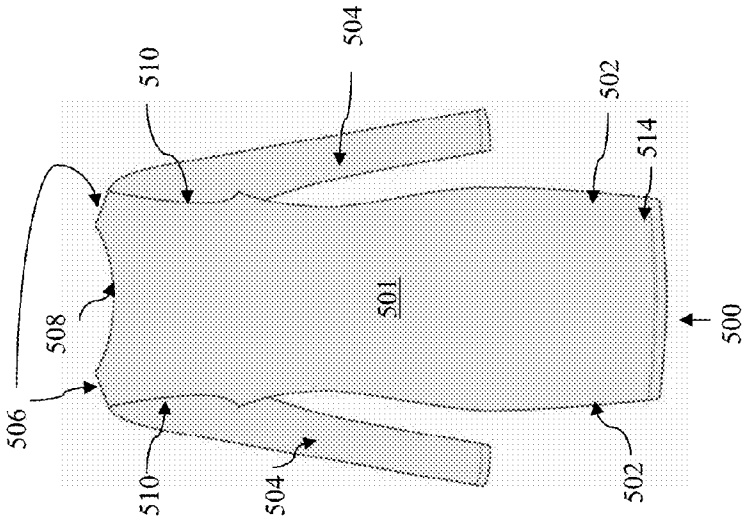
504
510
502
514
501
508
500
506
510
504
502

FIG. 5B

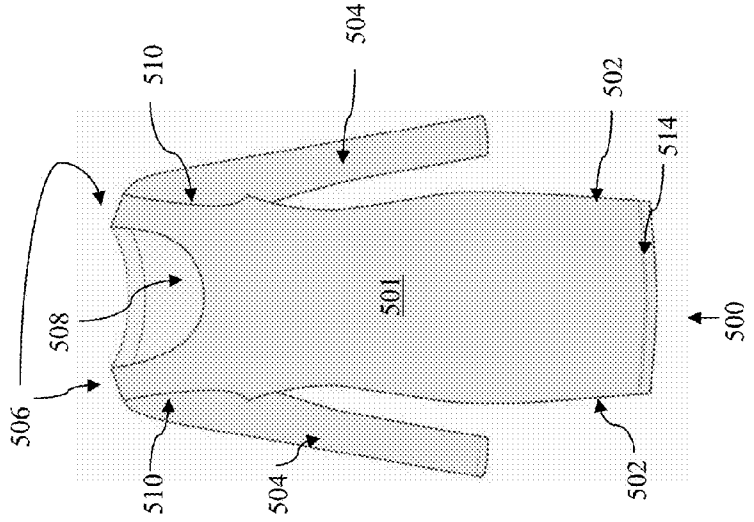
504
510
502
514
501
508
500
506
510
504
502

FIG. 5A

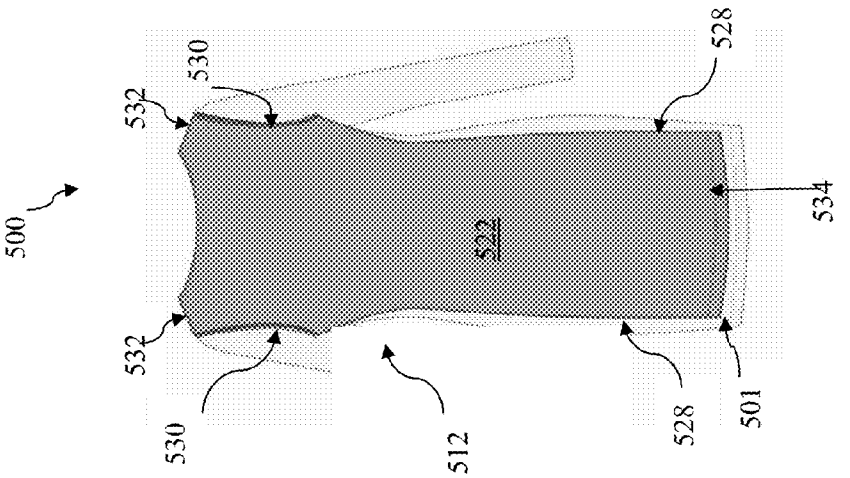
500
532
530
528
534
522
532
530
512
528
501

FIG. 5D

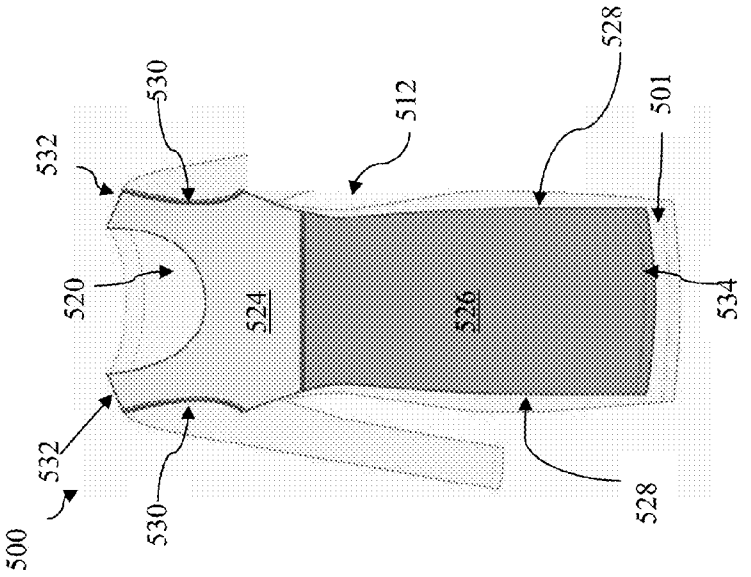
500
532
530
520
524
512
528
501
526
534
532
530
528

FIG. 5C

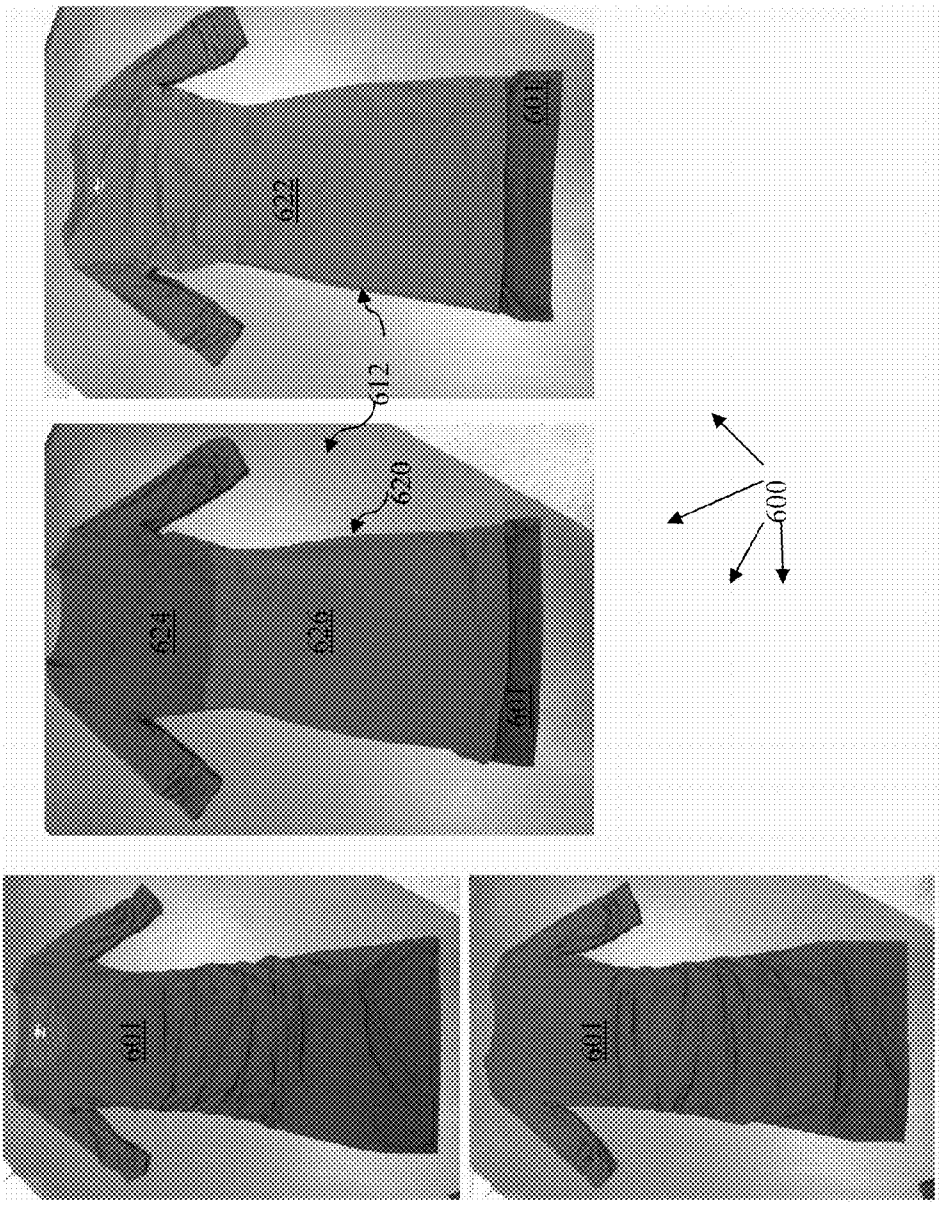

FIG. 6

TOPS AND DRESSES WITH HIDDEN CONTROL LINING

RELATED APPLICATIONS

[0001] This application claims priority to U.S. Provisional Application No. 61/931,386, filed Jan. 24, 2014, entitled "TOPS AND DRESSES WITH HIDDEN CONTROL LINING," the content of which is incorporated herein by reference in its entirety.

FIELD OF THE INVENTION

[0002] The present invention relates to the field of garments, and more particularly, to tops and dresses, that provide shaping benefits.

BACKGROUND OF THE INVENTION

[0003] Garments have been providing wearers functional and aesthetic utilities throughout human history. In recent years, shaping underwear (such as corsets, bras, and girdles) has gained popularity among women because it helps a wearer to achieve a more fashionable figure. In many cases, however, the wearer must also wear a fashionable outer layer not only to conceal the shaping underwear, but also to fully take advantage of the underwear's shaping properties. Even more recently, there have been attempts made to design single garments that combine the outer layer, such as tops, with an attached shaping element on the interior of the garment. Oftentimes, however, the drawback of such garments is that the shaping element is attached to the outer layer in such a way that the seams or other attaching devices are visible to the outside observer, who then is aware that the wearer is wearing a garment that contains a shaping element. Therefore, there is a need in the art for garments that incorporate shaping elements while appearing, from the outside observer's perspective, to be conventional outer layers with no shaping elements.

BRIEF SUMMARY OF THE INVENTION

[0004] The present disclosure is best understood with reference to the claims, the entire specification, and the drawings submitted herewith, which describe the embodiments according to the present disclosure in greater detail. The summary is merely intended to convey aspects of illustrative embodiments.

[0005] The present disclosure describes embodiments of an upper body or full body garment that that may provide shaping benefits around the wearer's body to provide a slim and smooth appearance, particularly to the waist, hips and upper back and, in the case of full body garments, the thighs and buttocks. An exemplary garment according to the present disclosure, such as a top or a dress, may first comprise an outer layer. The outer layer may be any of a typical upper body or full body garment known in the art, such as a top, a blouse or dress, which may vary in style, sleeve length, body length and other design details. It may be constructed of any suitable fabric, including non-control fabrics, such as a knit fabric.

[0006] An exemplary garment according to the present disclosure may further comprise an inner shaping layer anchored to the outer layer. The inner shaping layer may be attached to the outer layer in such a way that the seams or other attaching devices are not visible to the outside observer, so that the garment may appear, from the outside observer's perspective, to be a conventional outer layer that contains no shaping element. In some embodiments, the inner shaping layer may be anchored to the outer layer just at the neckline and armholes. The bottom of the inner shaping layer may be floating, i.e., not attached to the outer layer. In other embodiments, the inner shaping layer may be attached or tethered to the outer layer along the side seams.

[0007] In some embodiments according to the present disclosure, the inner shaping layer may comprise a front panel and back panel, connected at the side seams. In such embodiments, the front panel may comprise a top portion, extending from the neckline of the garment to underneath the wearer's breasts. The top portion may be constructed of a non-control fabric, and may be the same fabric as the outer layer. The front panel may further comprise a bottom portion, attached to the top portion, and extending from underneath the wearer's breasts to the bottom edge of the inner shaping layer. This bottom portion may be made of a control fabric. The back panel may extend from the neckline to the bottom edge of the inner shaping layer, and may also be made of a control fabric. In some aspects, the bottom edge of the inner shaping layer further may comprise a hidden elastic inner circumferential hem, which may grip the body of the wearer to keep the inner shaping layer in place.

BRIEF DESCRIPTION OF THE DRAWINGS

[0008] In the accompanying drawings that form a part of the specification and are to be read in conjunction therewith, the present invention is illustrated by way of example and not limitation, with like reference numerals referring to like elements, wherein:

[0009] FIGS. **1**A-**1**D show the outside and inside front and back of an exemplary upper body shirt garment according to the present disclosure.

[0010] FIG. **2** shows an upper body shirt garment according to another embodiment of the present disclosure.

[0011] FIG. **3** shows an upper body shirt garment according to another embodiment of the present disclosure.

[0012] FIG. **4** shows an upper body shirt garment according to another embodiment of the present disclosure.

[0013] FIGS. **5**A-**5**D show the outside and inside front and back of an exemplary full body dress garment according to the present disclosure.

[0014] FIG. **6** shows a full body dress garment according to another embodiment of the present disclosure.

DETAILED DESCRIPTION

[0015] In the following detailed description, numerous specific details are set forth in order to provide a thorough understanding of embodiments of the disclosure. In other instances, well known constructions of garments have not been shown in detail, as they are understood by those of skill in the art. It is intended that no part of this specification be construed to effect a disavowal of any part of the full scope of the disclosure.

[0016] Before explaining at least one embodiment of the invention in detail, it is to be understood that the invention is not limited in its application to the details of construction and to the arrangements of the components set forth in the following description or illustrated in the drawings. The invention is capable of other embodiments and of being practiced and carried out in various ways. Also, it is to be understood

that the phraseology and terminology employed herein are for the purpose of description and should not be regarded as limiting.

[0017] In addition, features illustrated or described as part of one embodiment can be used on other embodiments to yield a still further embodiment. Additionally, certain features may be interchanged with similar devices or features not mentioned yet which perform the same or similar functions. It is therefore intended that such modifications and variations are included within the totality of the present invention.

[0018] An exemplary garment according to the present disclosure, such as a top or a dress, may first comprise an outer layer. The outer layer may take the form of any suitable upper body or full body garment now known in the art or hereinafter created. For example, an outer layer according to the present disclosure may have any of a variety of sleeve lengths including, but not limited to, sleeveless (such as a tank top), short, three-quarter length, long, cuffed, etc. The outer layer may also have any of a variety of necklines, such as round, sweetheart, v-neck, crew, boat, cowl, and scoop neck configurations. Additionally, the outer layer may be a variety of lengths, to provide varying upper and lower body coverage, such as a waist-length top, a tunic, a knee-length dress, etc. The outer layer may be constructed of any suitable fabric, including non-control fabrics, such as a knit fabric, and further may have varying design elements such as applique, ruching, pleating, draping, secondary fabrics, etc. In certain embodiments, the outer layer may be constructed of a non-opaque fabric, such that anything underneath the outer layer will not be visible.

[0019] FIGS. **1**A and **1**B depict an exemplary embodiment of an upper body garment **100** according to the present disclosure, wherein the garment **100** first may comprise an outer layer **101** configured as a shirt. As shown on FIGS. **1**A and **1**B, the outer layer **101** may have side seams **102** and arm holes **110**, and may further comprise an optional back midline vertical design seam **103**. At the top, the outer layer **101** may comprise a top edge seam **106** and a neckline **108**. At the bottom, the outer layer **101** may comprise an optional hem **114**. As shown on FIGS. **1**A and **1**B, the garment **100** may further comprise one or more sleeves **104** which, in such embodiments, may also have an optional hem **114**.

[0020] FIGS. **1**C and **1**D depict the inside of the exemplary upper body garment **100** shown on FIGS. **1**A and **1**B. Such an exemplary garment **100** according to the present disclosure may further comprise an inner shaping layer **112** anchored to the outer layer **101**. As shown on FIGS. **1**C and **1**D, the inner shaping layer **112** may comprise a front panel **120** and a back panel **122**, which may be attached at side seams **128**, and which may be constructed in such a manner so as to line the outer layer **101** at both front and back. The sides of the inner shaping layer **112** may comprise side seams **128**, arm holes **130**, and a bottom hem **134**. In certain embodiments, the bottom hem **134** may incorporate elastic, so as to help grip the bottom of the inner shaping layer **112** to the body of the wearer.

[0021] As shown on FIGS. **1**C and **1**D, the front panel **120** may comprise a top portion **124**, which may extend from the top edge seams **132** of the inner shaping layer **112** to underneath the wearer's breasts. The front panel **120** may further comprise a bottom portion **126**, which may be attached to the top portion **124**, and which may extend from underneath the wearer's breasts to the bottom edge of the inner shaping layer. In certain embodiments, the top portion **124** may be connected to the bottom portion **126** with a flat stitching, such as a triple needle cover stitch. The fabric and neckline of the top portion **124** may be similar or identical to the fabric and neckline of the outer layer **101**. The fabric of the bottom portion **126** and the back panel **122** may be a fabric capable of providing compressive or shaping benefits, such as a micro denier, Spandex, also sometimes referred to as elastane, or other type of similar fabric.

[0022] The inner shaping layer **112** may be attached to the outer layer **101** in such a way that the seams or other attaching devices are not visible to the outside observer, so that the garment **100** may appear, from the outside observer's perspective, to be a conventional garment that contains no shaping element. In some embodiments, the inner shaping layer **112** may be anchored to the outer layer **101** just at the neckline **108** and armholes **110**. The anchoring may be done by, for example, stitching or glue. In one non-limiting example, the anchoring may be done by a single needle stitch, or 3 needle overlock stitch. In embodiments wherein the inner shaping layer **112** is anchored to the outer layer **101** just at the neckline **108** and armholes **110**, the bottom of the inner shaping layer **112** may be floating, i.e., not attached to the outer layer **101**.

[0023] In other embodiments, the inner shaping layer **112** may be optionally attached or tethered to the outer layer **101** along one or more vertical seams such as side seams (e.g., outside seam **102**). The side anchoring may be done by stitching (e.g., single needle top stitch) or glue. In certain of these embodiments, the side anchoring may cover the full length of the inner shaping layer **112**, that is, from the bottom edge of the arm holes **110** to the bottom edge of the inner shaping layer **112**. In other embodiments, the side anchoring may cover only a partial length of the full width.

[0024] FIGS. **2**, **3** and **4** illustrate additional exemplary upper body garments according to the present disclosure. Referring to FIGS. **2**, **3** and **4**, each shirt **200**, **300**, **400** includes an outer layer **201**, **301**, **401** and an inner shaping layer **212**, **312**, **412** wherein the inner shaping layer **212**, **312**, **412** comprises a front panel **220**, **320**, **420** and a back panel **222**, **322**, **422**, and wherein the front panel **220**, **320**, **420** comprises a top portion **224**, **324**, **424** and a bottom portion **226**, **326**, **426**. In the exemplary embodiments shown on FIGS. **2**, **3** and **4**, the garments depict varying non-limiting design elements.

[0025] For example, FIG. **2** shows a shirt **200** having an optional leather detail **240** at the shoulders of the outer layer **201**. FIG. **3** shows a shirt **300** with an outer layer **301** having a draped design and optional midline vertical design seam **303**. FIG. **4** shows a shirt **400** with an outer layer **401** having zippers **450** at the side seams **402**. When closed, the zippers **450** of the shirt shown in FIG. **4** conceal a fabric **460** that may be different, e.g., in color, pattern, type, etc., than that of the outer layer **401**. Fabric **460** may be revealed when zippers **450** are open. Additionally, the shirt **400** of FIG. **4** may comprise a fabric collar **470** at the neckline. As shown in FIG. **4**, the back panel **422** of the inner shaping layer **412** may also have a top portion **480** and a bottom portion **490**, wherein the fabric and neckline of the top portion **480** is preferably similar or identical to the fabric and neckline of the outer layer **401**. As described previously, in some embodiments, a garment according to the present disclosure may be a full body garment, such as a dress. FIGS. **5**A and **5**B depict an exemplary embodiment of a full body garment **500** according to the present disclosure, wherein the garment **500** comprises an outer layer **501** configured as a dress. As shown on FIGS. **5**A

and 5B, the outer layer **501** may have side seams **502** and arm holes **510**, and may further comprise an optional back midline vertical design seam **503**. At the top, the outer layer **501** may comprise a top edge seam **506** and a neckline **508**. At the bottom, the outer layer **101** may comprise an optional hem **514**. As shown on FIGS. **5**A and **5**B, the garment **500** may further comprise sleeves **504** which, in such embodiments, may also have optional hem **514**.

[0026] FIGS. **5**C and **5**D depict the inside of the exemplary full body garment **500** shown on FIGS. **5**A and **5**B. Such an exemplary garment **500** according to the present disclosure may further comprise an inner shaping layer **512** anchored to the outer layer **501**. As shown on FIGS. **5**C and **1**D, the inner shaping layer **512** may comprise a front panel **520** and a back panel **522**, which may be attached at side seams **528**, and which may be constructed in such a manner so as to line the outer layer **501** at both front and back. The sides of the inner shaping layer **512** may comprise side seams **528**, arm holes **530**, and bottom hem **534**. In certain embodiments, the bottom hem **534** may comprise elastic, so as to help grip the bottom of the inner shaping layer **512** to the body of the wearer.

[0027] As shown on FIGS. **5**C and **5**D, in such embodiments, the front panel **520** may comprise a top portion **524**, which may extend from the top edge seams **532** of the garment **500** to underneath the wearer's breasts. The front panel **520** may further comprise a bottom portion **526**, which may be attached to the top portion **524**, and which may extend from underneath the wearer's breasts to the bottom edge of the inner shaping layer **512**. In certain embodiments, the top portion **524** may be connected to the bottom portion **526** with a flat stitching such as a triple needle cover stitch. The fabric of the top portion **524** may be similar or identical to the fabric and neckline of the outer layer **501**. The fabric of the bottom portion **526** and the back panel **522** may be a fabric capable of providing compressive or shaping benefits, such as a micro denier, Spandex, also sometimes referred to as elastane, or other type of similar fabric.

[0028] The inner shaping layer **512** may be attached to the outer layer **501** in such a way that the seams or other attaching devices are not visible to the outside observer, so that the garment **500** may appear, from the outside observer's perspective, to be a conventional garment that contains no shaping element. In some embodiments, the inner shaping layer **512** may be anchored to the outer layer **501** just at the neckline **508** and armholes **510**. The anchoring may be done by, for example, stitching or glue. In one non-limiting example, the anchoring may be done by a single needle stitch, or 3 needle overlock stitch. In embodiments wherein the inner shaping layer **512** is anchored just at the neckline **508** and armholes **510**, the bottom of the inner shaping layer **512** may be floating, i.e., not attached to the outer layer **501**. In other embodiments, the inner shaping layer **512** may be optionally attached or tethered to the outer layer **501** along one or more vertical seams such as side seams (e.g., outside seam **102**). The side anchoring may be done by stitching (e.g., single needle top stitch) or glue. In some embodiments, the side anchoring may cover the full length of the inner shaping layer **512**, that is, from the bottom edge of the arm holes **510** to the bottom edge of the inner shaping layer **512**. In other embodiments, the side anchoring may cover only a partial length of the full width.

[0029] FIG. **6** illustrates another exemplary dress according to the present invention. As depicted on FIG. **6**, the dress **600** may comprise an outer layer **601** and an inner shaping layer **612**, wherein the inner shaping layer **612** may comprise a front panel **620** and a back panel **622**, and wherein the front panel **620** may comprise a top portion **624** and a bottom portion **626**. In the embodiment shown in FIG. **6**, the dress **600** further comprises varying nonlimiting design elements, such as the outer layer **601** having a round neckline and side ruching.

[0030] What has been described and illustrated herein is a preferred embodiment of the invention along with some of its variations. The terms, descriptions and figures used herein are set forth by way of illustration only and are not meant as limitations. Those skilled in the art will recognize that many variations are possible within the spirit and scope of the invention, which is intended to be defined by the following claims, in which all terms are meant in their broadest reasonable sense unless otherwise indicated therein.

What is claimed is:

1. An upper body garment that provides shaping benefits, comprising:
- an outer layer configured as a dress; and
- an inner shaping layer comprising a front panel and back panel;
- wherein the front panel comprises a first portion to attach the inner shaping layer to the outer layer on the front and a second portion to provide a shaping benefit, and the back panel is attached to the outer layer on the back and also provides a shaping benefit,
- wherein the inner shaping layer is not visible from the outside of the outer layer.

2. The upper body garment of claim **1**, wherein the first portion and back panel are attached to the outer layer on existing seams of the outer layer.

3. The upper body garment of claim **2**, wherein the existing seams comprise a neckline, armholes, or both.

4. The upper body garment of claim **3**, wherein the existing seams further comprise vertical seams.

5. The upper body garment of claim **4**, wherein the vertical seams comprise a side seam.

6. The upper body garment of claim **4**, wherein the inner shaping layer's attachment to the outer layer by the vertical seams only cover a partial length of the inner shaping layer.

7. The upper body garment of claim **4**, wherein the inner shaping layer's attachment to the outer layer by the vertical seams cover a full length of the inner shaping layer.

8. The upper body garment of claim **1**, wherein bottom of the inner shaping layer is floating.

9. The upper body garment of claim **1**, wherein the inner shaping layer is attached to the outer layer by stitching or glue.

10. The upper body garment of claim **1**, wherein the inner shaping layer is attached to the outer layer by at the outer layer's neckline or armholes by a single needle stitch or 3 needle overlock stitch.

11. The upper body garment of claim **1**, wherein the outer layer is a shirt dress.

12. The upper body garment of claim **1**, wherein the second portion and back panel are made of elastane.

13. The upper body garment of claim **1**, wherein the outer layer is made of a non-opaque fabric.

14. A full body garment that provides shaping benefits, comprising:
- an outer layer configured as a dress;
- an inner shaping layer comprising a front panel and back panel;

wherein the front panel comprises a first portion to attach the inner shaping layer to the outer layer on the front and a second portion to provide a shaping benefit, and the back panel is attached to the outer layer on the back and also provides a shaping benefit,

wherein the inner shaping layer is not visible from the outside of the outer layer.

15. The full body garment of claim **14**, wherein the first portion and back panel are attached to the outer layer on existing seams of the outer layer, wherein the existing seams comprise a neckline, armholes, or both.

16. The full body garment of claim **15**, wherein the existing seams further comprise vertical seams that comprise a side seam.

17. The full body garment of claim **14**, wherein bottom of the inner shaping layer is floating.

18. The full body garment of claim **14**, wherein the inner shaping layer is attached to the outer layer by stitching or glue.

19. The full body garment of claim **14**, wherein the outer layer is a skirt dress.

20. The full body garment of claim **14**, wherein the second portion and back panel are made of elastane and the outer layer is made of a non-opaque fabric.

21. The full body garment of claim **14**, wherein the inner shaping layer further comprises a bottom hem that comprises elastic to help grip the bottom of the inner shaping layer to a body of a wearer.

* * * * *