(12) INTERNATIONAL APPLICATION PUBLISHED UNDER THE PATENT COOPERATION TREATY (PCT)

(19) World Intellectual Property Organization
International Bureau

(43) International Publication Date
06 August 2020 (06.08.2020)

WIPO | PCT

(10) International Publication Number
WO 2020/157466 A1

(51) International Patent Classification:
B65D 85/10 (2006.01)

(21) International Application Number:
PCT/GB2020/050144

(22) International Filing Date:
22 January 2020 (22.01.2020)

(25) Filing Language: English

(26) Publication Language: English

(30) Priority Data:
1901123.8 28 January 2019 (28.01.2019) GB

(71) Applicant: **BRITISH AMERICAN TOBACCO (INVESTMENTS) LIMITED** [GB/GB]; Globe House, 1 Water Street, London WC2R 3LA (GB).

(72) Inventors: **HODGES, Paul**; c/o British American Tobacco (Investments) Limited, Globe House, 1 Water Street, London WC2R 3LA (GB). **GIBSON, Paul**; c/o British American Tobacco (Investments) Limited, Globe House, 1 Water Street, London WC2R 3LA (GB). **LEWIS, Stephen**; c/o British American Tobacco (Investments) Limited, Globe House, 1 Water Street, London WC2R 3LA (GB).

(74) Agent: **GREY, Ian**; Venner Shipley LLP, 200 Aldersgate, London EC1A 4HD (GB).

(81) Designated States *(unless otherwise indicated, for every kind of national protection available)*: AE, AG, AL, AM, AO, AT, AU, AZ, BA, BB, BG, BH, BN, BR, BW, BY, BZ, CA, CH, CL, CN, CO, CR, CU, CZ, DE, DJ, DK, DM, DO, DZ, EC, EE, EG, ES, FI, GB, GD, GE, GH, GM, GT, HN, HR, HU, ID, IL, IN, IR, IS, JO, JP, KE, KG, KH, KN, KP, KR, KW, KZ, LA, LC, LK, LR, LS, LU, LY, MA, MD, ME, MG, MK, MN, MW, MX, MY, MZ, NA, NG, NI, NO, NZ, OM, PA, PE, PG, PH, PL, PT, QA, RO, RS, RU, RW, SA, SC, SD, SE, SG, SK, SL, ST, SV, SY, TH, TJ, TM, TN, TR, TT, TZ, UA, UG, US, UZ, VC, VN, WS, ZA, ZM, ZW.

(84) Designated States *(unless otherwise indicated, for every kind of regional protection available)*: ARIPO (BW, GH, GM, KE, LR, LS, MW, MZ, NA, RW, SD, SL, ST, SZ, TZ, UG, ZM, ZW), Eurasian (AM, AZ, BY, KG, KZ, RU, TJ, TM), European (AL, AT, BE, BG, CH, CY, CZ, DE, DK, EE, ES, FI, FR, GB, GR, HR, HU, IE, IS, IT, LT, LU, LV, MC, MK, MT, NL, NO, PL, PT, RO, RS, SE, SI, SK, SM, TR), OAPI (BF, BJ, CF, CG, CI, CM, GA, GN, GQ, GW, KM, ML, MR, NE, SN, TD, TG).

Published:
— *with international search report (Art. 21(3))*

(54) Title: PACK FOR SMOKING ARTICLES

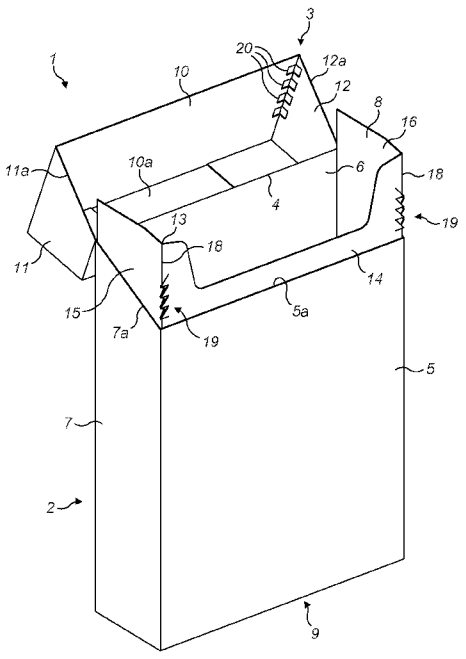

FIG. 1

(57) Abstract: A container for smoking articles comprising a base and a lid hingedly connected to the base is disclosed. The base has a pair of side walls and a front wall extending between the side walls that meet each side wall at an edge. A row of teeth, lying in the plane of the side and/or front wall, extend from said edge. Also disclosed is an inner frame blank for a smoking article container, and a method of forming a pack for smoking articles from a sheet of material.

WO 2020/157466 A1

Pack for Smoking Articles

Field of invention

The invention relates to a pack for smoking articles, such as cigarettes. In particular the invention relates to a hinged-lid pack for smoking articles.

Background

Many variations of packs for smoking articles are known. One such pack is the so-called 'hinged-lid' pack which generally comprises a base and a lid hingedly connected to a rear wall of the base and pivotable between an open position to allow access to the interior of the base through an access aperture in the top of the base, and a closed position in which the opening in the base is closed by the lid.

Summary

In accordance with embodiments of the invention there is provided a container for smoking articles comprising a base and a lid hingedly connected to the base, the base having a pair of side walls and a front wall extending between the side walls that meets each side wall at an edge, wherein a row of teeth lying in the plane of the side and/or front wall extend from said edge.

The lid may also have a corresponding recess, or recesses, on an inner surface. If there is more than one recess, each recess may be configured to receive a respective tooth when the lid is closed. Alternatively, there may just be a single recess in which all the teeth locate when the lid is closed.

If there is a plurality of separate recesses, they may be positioned such that some of the teeth enter, and then leave, some of the recesses as the lid is closed.

It is envisaged that a row of teeth could extend from both edges, i.e. where the front wall meets each side wall of the pack, although it is possible that

the row of teeth could extend from only a single edge of the pack. Preferably, however, the pack is symmetrical about its longitudinal axis so both edges are the same.

The row of teeth extending from an edge may lie in the plane of both the side wall and the front wall so both the front wall and the side wall of the lid may be engaged by the row of teeth.

When the teeth extending from an edge lie in the plane of both the front and the side wall, they can be configured so that they mesh with each other at each edge. More specifically, a tooth lying in one plane may be spaced from a tooth lying in the same plane by a tooth lying in the other plane, i.e. the tooth lying in the other plane is effectively positioned in the trough between the tooth lying in the same plane so that the direction in which adjacent teeth extend is alternating.

Each side wall and the front wall may lie at 90 degrees to each other. As the teeth lie in the plane of the front and side walls, the teeth lying in the plane of the side wall will then also be at 90 degrees to the teeth lying in the plane of the front wall.

The front and side walls can be formed from integrally from the same sheet of material. In this case, the edge between each side wall and the front wall may be defined by a fold-line.

The teeth that extend from said edge in the plane of the side wall may be cut from the material that forms part of the front wall.

Similarly, the teeth that extend from said edge in the plane of the front wall may be cut from the material forming part of the adjacent side wall.

The lid of the container can comprise inner flaps that lie against an inner surface of the lid. The recesses can then be formed from cut-outs

extending along said edges. The position of the cut-outs can correspond to the position of the teeth so that each tooth is received in a corresponding cut out when the lid is closed. The teeth may make contact with the flaps during the action of closing the lid and continued movement of the lid into its fully closed position may then cause the teeth to produce an audible or tactile 'click' type sensation as they drop into their respective recess. The lid and/or the teeth may have a degree of resilience or 'give' so that the pack flexes during closure to allow the teeth to positively locate in the appropriate recess. It will be appreciated that, when the lid is opened, the teeth and/or the lid will deform slightly to allow the teeth to slide out of their recess. Although there may not be any deformation of the lid and/or the teeth when the lid is fully closed and the teeth are seated in their corresponding recess, it is possible that the teeth will still make contact with the inner surface of the lid forming the base of the recess and any force between the inside of the lid and the teeth will assist in maintaining the lid closed.

It is also envisaged that the edge of the inner flaps may be straight, but they may not extend all the way across the inside surface of the lid so that a gap is formed between the edge of the inner flap and the adjacent inside wall of the lid. The teeth can then locate in this gap when the lid is closed, i.e. all the teeth extending in one direction from an edge will be received in the same recess.

The base may comprise an inner frame extending from the access opening. The inner frame is then received in the lid when the lid is closed. The teeth can then be formed in the inner frame. The inner frame can be a separate component that is attached to the base during assembly.

The row of teeth may comprise a serrated profile. For example, the teeth may have pointed tips. The row may have a zig-zag shaped profile.

In another embodiment, the row of teeth may comprise a castellated profile. For example, each tooth may be essentially square-shaped or rectangular with two straight parallel side edges and a top edge extending at right-angles to each side edge.

In accordance with embodiments of the invention, there is also provided an inner frame blank for a smoking article container that is configured to extend from a base of the container and be received within a lid hingedly connected to the base when the lid is closed, the inner frame blank having a pair of side walls and a front wall extending between the side walls that meets each side wall at an edge, wherein a plurality of teeth lying in the plane of the side and/or front wall extend from said edge when the inner frame is folded about said edge.

The edge can be defined by a fold-line that is broken part way along its length by a cut-line configured so that, when each side wall is folded relative to the front wall about said edge, the material separates along said cut-line. The cut-line can have a toothed form that extends laterally from said edge.

The cut-line may have a toothed form that extends laterally from said edge in opposite directions so that a plurality of teeth lying in the plane of both the side and the front wall extend from said edge when the blank is folded about the fold-line.

In accordance with embodiments of the invention, there is also provided a container blank comprising a lid and a base, wherein the lid comprises an inner flap having an edge defined by cut-outs, to receive the teeth on the inner frame blank according to the invention, when the container is assembled and the lid is closed.

In accordance with embodiments of the invention, there is also provided a method of forming a pack for smoking articles from a sheet of material,

the pack comprising a base and a lid hingedly connected to the base, the base having a pair of side walls and a front wall extending between the side walls that meets each side wall at an edge, said edge being partly defined by a toothed cut-line through the material so that, when the blank is subsequently folded about said edge, the material separates along said cut-line to form a row of teeth extending from each edge in the plane of the side wall and/or the front wall.

The toothed cut-line may be formed so that it extends laterally away from the edge in both directions into the side wall and the front wall.

Brief description of the drawings

Embodiments of the invention will now be described, by way of example only, with reference to the accompanying drawings in which:

Figure 1 shows a perspective view of a pack according to an embodiment of the invention with the lid in an open state;

Figure 2 shows an enlarged view of an upper region of the pack shown in Figure 1;

Figure 3 illustrates a blank for forming the lid and base of the pack shown in Figures 1 and 2; and

Figure 4 shows an enlarged view of an upper region of a pack according to another embodiment of the invention;

Figure 5 showa a blank for forming the lid and base of the pack shown in Figure 4;

Figure 6 illustrates a blank for forming the inner frame of the pack shown in Figures 1 to 5;

Figure 7 is a perspective view of a pack according to another embodiment;

Figure 7A is an enlarged view of the row of teeth extending from the plane of the front wall shown in the pack of Figure 7;

Figure 7B is an enlarged view of a row of teeth according to another embodiment;

Figure 7C is an enlarged view of a row of teeth according to another embodiment; and

Figure 8 is a cross section through the recesses formed on the inner side surface of the lid in any of the embodiments.

Detailed description

It is desirable to provide a hinge-lid pack with improved resistance to opening the lid and which may provide an indication to a consumer when the pack is being opened or closed. Such an indication may be tactile and/or audible.

Figures 1 and 2 each show a perspective view of a container in accordance with an embodiment of the invention. In the following examples, the container is described in terms of a pack 1 for containing smoking articles. In the context of the present invention, the term "smoking article" includes smokeable products such as cigarettes, cigars and cigarillos whether based on tobacco, tobacco derivatives, expanded tobacco, reconstituted tobacco or tobacco substitutes and also heat-not-burn products.

The pack 1 includes a base 2 and a lid 3. The lid 3 is attached to the base 2 for rotation about hinge 4 on the rear wall and spaced from the top of the pack in order to allow the pack 1 to be opened and closed. In Figure 1 the pack 1 is shown in its open state.

According to the orientation shown in Figure 1, the base 2 includes front and back panels 5, 6, two opposing side panels 7, 8, and a closed bottom panel 9. The lid 3 is at the top of the pack 1, opposite the closed bottom panel 9. The lid 3 includes a front panel 10, two opposing side panels 11, 12 and a top panel 10a. When the lid 3 is closed, the lower edge 10a of the front panel 10 of the lid 3 aligns with and abuts the upper edge 5a of the front panel 5 of the base 2, while the lower edges 11a, 12a of each opposing side panel 11, 12 aligns with and abuts the upper edge 7a, 8a of each of the two opposing side panels 7, 8 of the base 2.

A blank for forming the pack 1 shown in Figure 1 is illustrated in Figure 3 and in which lines about which adjacent panels or walls are folded are represented by dashed lines and lines which are cut are represented by solid lines.

An inner frame 13 is attached to the inside of, and extends from, the open end of the base 2 and has a front wall 14 and opposing side walls 15, 16. The front wall 14 meets each side wall 15, 16 at an edge 18 defined by a fold line. The side walls 15, 16 are parallel to each other and extend at right angles to the front wall 14 when the inner frame 13 is folded and inserted into the base 2. The inner frame 13 is received in the lid 3 when the lid 3 is closed and so that a front wall inner flap 21 of the lid 3 lies against the front wall 14 of the inner frame 13. Likewise, side wall inner flaps 22 of the lid 3 lie against the side walls 15, 16 of the inner frame 13. A blank for forming the inner frame 13 is illustrated in Figure 6.

The edge 18 of the inner frame 13, where the front wall 14 meets each of the side walls 15, 16 is provided with a feature to help maintain the lid 3 in a closed state. The feature, in conjunction with corresponding features in the lid, may alternatively or additionally provide tactile and/audible feedback to a consumer when the lid 3 is opened and closed, and may provide the consumer with positive reassurance that the lid 3 will remain in its closed state.

The feature comprises a line or row of teeth, such as serrations 19, which protrude from the edge of the inner frame 13 and lie in the same plane as the sidewall 15, 16 and/or the front wall 14 when the pack is assembled. More specifically, in one embodiment, serrations 19 extend from one or, more preferably, both of the side walls 15, 16 and protrude beyond the plane of the front wall 14 at right angles to the front wall 14. Alternatively, serrations 19 extend from the front wall 14 at right angles to the side walls 15, 16 and protrude beyond the plane of the side walls 15,16. In the most

preferred embodiment, serrations 19 extend from both the side walls 15,16 and from the front wall 14, as shown most clearly in Figure 2, and from which it can be seen that the serrations 19 mesh, dovetail or interlock with each other so that a serration 19a extending from a side wall 15,16 is adjacent to a corresponding serration 19b extending from the front wall 14. More specifically, each serration 19a lying in a first plane is spaced from its adjacent serration 19a in the same plane by a serration 19b lying in a second plane at right angles to the first plane. If each set of serrations 19 are defined as having peaks and troughs, then the serration 19a lying in the second plane lies in the trough between the serration 19b lying in the first plane. The direction in which adjacent serrations 19 extend therefore alternates.

The serrations 19 may be formed as tooth-like projections or tangs and resemble a saw-tooth like profile. In particular, they may have pointed tips and may each define the shape of an isosceles triangle. Alternatively, they may have the shape of a right-angled triangle or take some other form or profile.

Corresponding recesses 20, can be formed on the inner surface of the lid 3 so that, when the lid 3 is closed, each serration 19 locates in its complementary recess 20. As the lid 3 is rotated into its closed position about hinge 4, the serrations 19a extending from each side wall 15,16 may make initial contact with a front wall inner flap 21 lying against the inner surface 23 of the front wall 10 and serrations 19b extending from the front wall 14 may make initial contact with a side wall inner flap 22 lying against each of the inner surfaces 24 of the side walls 11,12 of of lid 3 before they 'click' or slide across the inner flaps 21,22 into the recesses 20 when the lid 3 is fully closed. When the lid 3 is fully closed, the tips of the serrations 19a may then extend through the recesses 20 and lie in contact with the inner surface 23 of the front wall of the lid 3 and serrations 19b may lie in contact with the inner surface 24 of the side walls 15,16 of the lid 3, to help maintain the lid 3 in the closed position.

The front wall inner flap 21 is folded and glued so that it lies against the inner surface 23 of the lid front panel 10 when the pack 1 is assembled. Similarly, the side wall inner flaps 22 are also folded and glued so that each side wall inner flap 22 lies against an inner surface 24 of its corresponding side wall 11,12 when the pack 1 is assembled. Edges of one or both of the front and/or side panel inner flaps 21, 22 have cut-outs 20a or serrated edges so that, when the flaps 21, 22 are in their assembled positions, they form the recesses 20 in which the serrations19 are received when the lid 3 is closed, with the inner surfaces 23, 24 of the lid 3 forming base of the recesses 20. Alternatively, the recesses 20 can be formed by embossing or by forming ridges (not shown) on an inner surface of the lid 3 or flap.

The serrations 19 are formed by initially forming an upper fold line 25a extending from the top edge of the inner frame 13 and a lower fold line 25b extending upwardly from the bottom edge of the inner frame 13 towards the upper fold line 25a. The first and second fold lines 25a, 25b are then connected by cutting a serrated, zig-zag or saw-tooth shaped slit 26 in the inner frame 13 that extends between the upper and lower fold lines 25a, 25b. When the inner frame 13 is then folded about the fold lines 25a, 25b, the intermeshing serrations 19 are formed. It will be appreciated that the serrations 19a extending from the side walls 15,16 are cut out from the front wall 14 and the serrations 19b extending from the front wall 14 are cut out from the side wall 15,16.

Figures 4 and 5 show an alternative pack 1 according to an embodiment of the invention. This embodiment is identical to the previous embodiment, except that neither the front wall inner flap 21 or the side wall inner flaps 22 are provided with individual cut-outs along their edges 31, 32 to receive the serrations 19. Instead, the side edge 31 of the front wall inner flap 21 does not extend all the way to the fold between the front wall 10 and each of the side walls 11, 12. Similarly, the side edge 32 of each side wall 11,12

does not extend all the way to the fold between the front wall 10 and each of the side walls 11, 12. This results in slots 33 being formed at the edges 31, 32 of the front wall 10 and side wall inner flaps 22 where the front wall 10 meets each of the side walls 11,12. The serrations 19 are received in these slots 30 when the lid 3 is closed. It will be appreciated that, in this embodiment, there is no tactile or audible feedback to the consumer when the lid 3 is closed.

With reference to Figure 7, there is shown a perspective view of a hinged-lid pack 1 of smoking articles according to another embodiment. In this embodiment, each row of teeth 30 extend in the plane of the front wall 14 of the pack 1 beyond their corresponding side wall 15, 16. However, they could also extend in the plane of the side wall 15,16. Figure 7A shows an enlarged view of the row of teeth 30 visible in Figure 7, and from which it can be seen that each tooth 31 has a curved or arcuate peripheral edge. Each tooth 31 may be semi-circular in shape.

Figure 7B shows an alternate form for the serrations 19 of Figures 4 and 6, and Figure 7C shows a square-shaped, stepped or castellated profile in which each tooth 32 has parallel edges 32a and a top edge 32b extending at right angles to the edges 32a.

Figure 8 illustrates a possible form for the recesses in the inner surface of the lid 3. The recesses may be formed in a lid flap or directly in the side wall of the lid 3. Furthermore, they may comprise a series of indentations or curved depressions 34. The recesses may be formed by embossing or other deformation of the wall or panels of the pack 1.

The skilled person will be aware of various modifications that may be made to the embodiments described above. For example, whilst a pack that opens along a hinge extending along a rear panel of the pack has been described, in other embodiments the pack may open along a different line extending, for example, along a side wall of the pack. Furthermore, an

embodiment has been described on which the serrations are formed on a separate inner frame. However, the inner frame could form an integral part of the base of the pack. In conclusion, the scope of the present invention is defined by the appended claims and their equivalents.

In order to address various issues and advance the art, the entirety of this disclosure shows by way of illustration various embodiments in which the claimed invention(s) may be practiced and provides superior packs for smoking articles. The advantages and features of the disclosure are of a representative sample of embodiments only, and are not exhaustive and/or exclusive. They are presented only to assist in understanding and teach the claimed features. It is to be understood that advantages, embodiments, examples, functions, features, structures, and/or other aspects of the disclosure are not to be considered limitations on the disclosure as defined by the claims or limitations on equivalents to the claims, and that other embodiments may be utilised and modifications may be made without departing from the scope and/or spirit of the disclosure. Various embodiments may suitably comprise, consist of, or consist essentially of, various combinations of the disclosed elements, components, features, parts, steps, means, etc. In addition, the disclosure includes other inventions not presently claimed, but which may be claimed in future.

Claims

1. A container for smoking articles comprising a base and a lid hingedly connected to the base, the base having a pair of side walls and a front wall extending between the side walls that meets each side wall at an edge, wherein a row of teeth, lying in the plane of the side and/or front wall, extend from said edge.

2. A container according to claim 1, wherein the lid comprises a corresponding recess or recesses on an inner surface to receive the row of teeth when the lid is closed.

3. A container according to claim 2, wherein the lid comprises a plurality of separate recesses on an inner surface of the lid, said recesses being configured so that a single tooth is received in each recess when the lid is closed.

4. A container according to claim 3, wherein said plurality of separate recesses are positioned such that some of the teeth enter and leave some of the recesses as the lid is closed.

5. A container according to any preceding claim, wherein teeth lie in the plane of both the side wall and the front wall.

6. A container according to claim 5, wherein the teeth lying in the plane of the front and side walls extending from an edge are configured so that they mesh with each other.

7. A container according to claim 5 or claim 6, wherein the side walls each lie at 90 degrees to the front wall so that the row of teeth lying in the plane of the side wall also lie at 90 degrees to the row of teeth lying in the plane of the front wall.

8. A container according to any preceding claim, wherein the edge between each side wall and the front wall is defined by a fold-line.

9. A container according to claim 8, wherein the row of teeth extends from said edge in the plane of the side wall, said row of teeth extending beyond the fold-line and being cut from the front wall.

10. A container according to claim 8 or 9, wherein the row of teeth extend from said edge in the plane of the front wall, said row of teeth extending beyond the fold-line and being cut from an adjacent side wall.

11. A container according to any preceding claim, wherein the lid comprises inner flaps that lie against an inner surface of the lid, the inner flaps having edges and said recesses are formed from cut-outs extending along said edges.

12. A container according to any preceding claim, wherein the base comprises an inner frame extending therefrom that is received in the lid when the lid is closed, said row of teeth being formed in the inner frame.

13. A container according to any preceding claim, wherein the row of teeth comprises a serrated profile.

14. A container according to any preceding claim, wherein the row of teeth comprises a zig-zag shaped profile.

15. A container according to any of claims 1 to 12, wherein the row of teeth comprise a castellated or square-shaped profile.

16. An inner frame blank for a smoking article container that is configured to extend from a base of the container and be received within a lid hingedly connected to the base when the lid is closed, the inner frame blank having a pair of side walls and a front wall extending between the

side walls that meets each side wall at an edge, wherein a row of teeth lying in the plane of the side and/or front wall extend from said edge when the inner frame is folded about said edge.

17. A blank according to claim 16, wherein the edge is defined by a fold-line that is broken part way along its length by a cut-line configured so that, when each side wall is folded relative to the front wall about said edge, the material separates along said cut-line, said cut-line having a toothed form that extends laterally from said edge.

18. A blank according to claim 17, wherein the cut-line has a toothed form that extends laterally from said edge in opposite directions so that a plurality of teeth lying in the plane of both the side and the front wall extend from said edge when the blank is folded about the fold-line.

19. A container blank comprising a lid and a base, wherein the lid comprises an inner flap having an edge defined by cut-outs to receive the teeth on the inner frame blank according to any of claims 12 to 18, when the container is assembled and the lid is closed.

20. A method of forming a pack for smoking articles from a sheet of material, the pack comprising a base and a lid hingedly connected to the base, the base having a pair of side walls and a front wall extending between the side walls that meets each side wall at an edge, said edge being partly defined by a teeth-shaped cut-line through the material so that, when the blank is subsequently folded about said edge, the material separates along said cut-line to form a row of teeth extending from each edge in the plane of the side wall and/or the front wall.

21. A method according to claim 20, wherein the toothed cut-line extends laterally away from the edge in both directions into the side wall and the front wall.

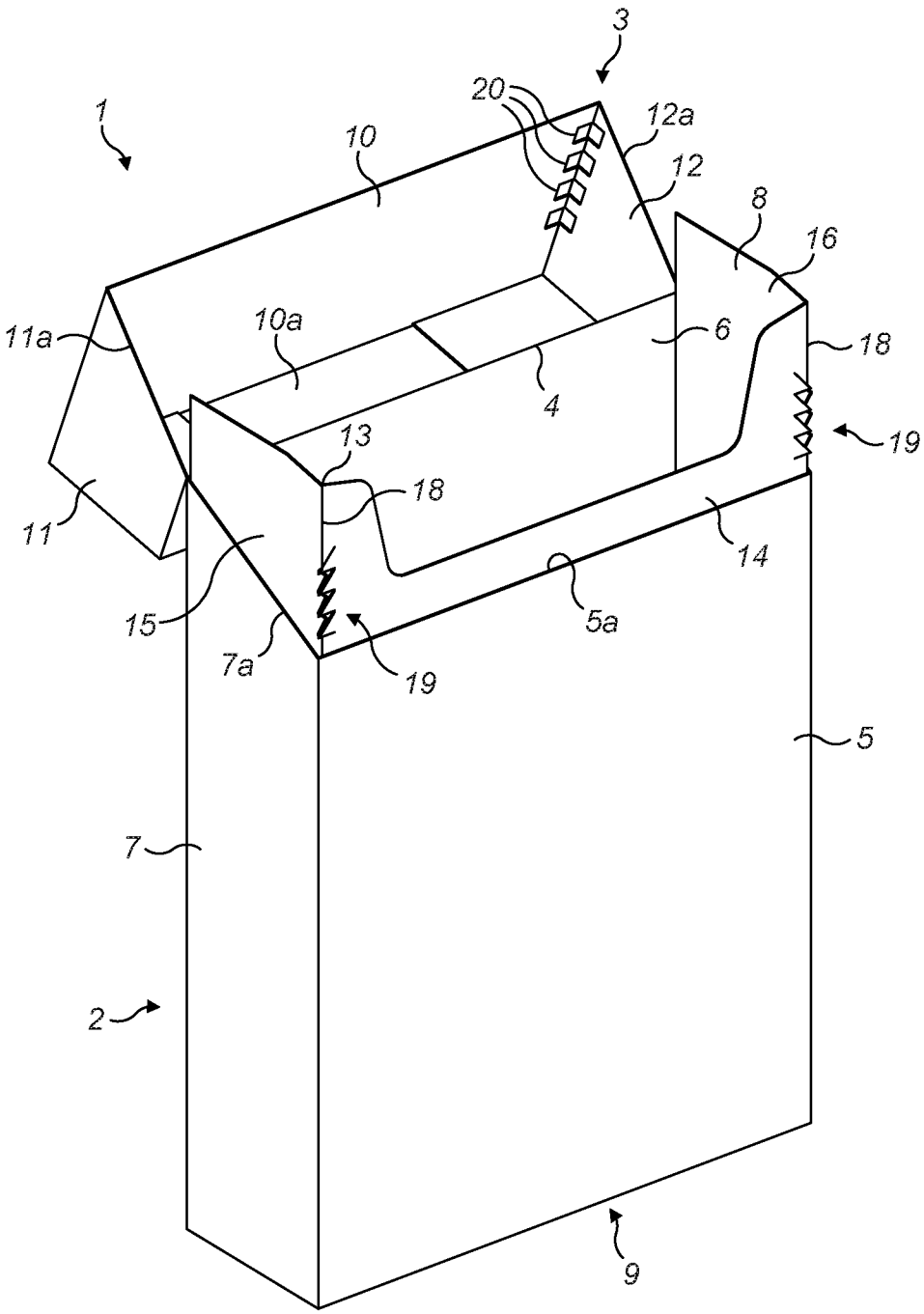

FIG. 1

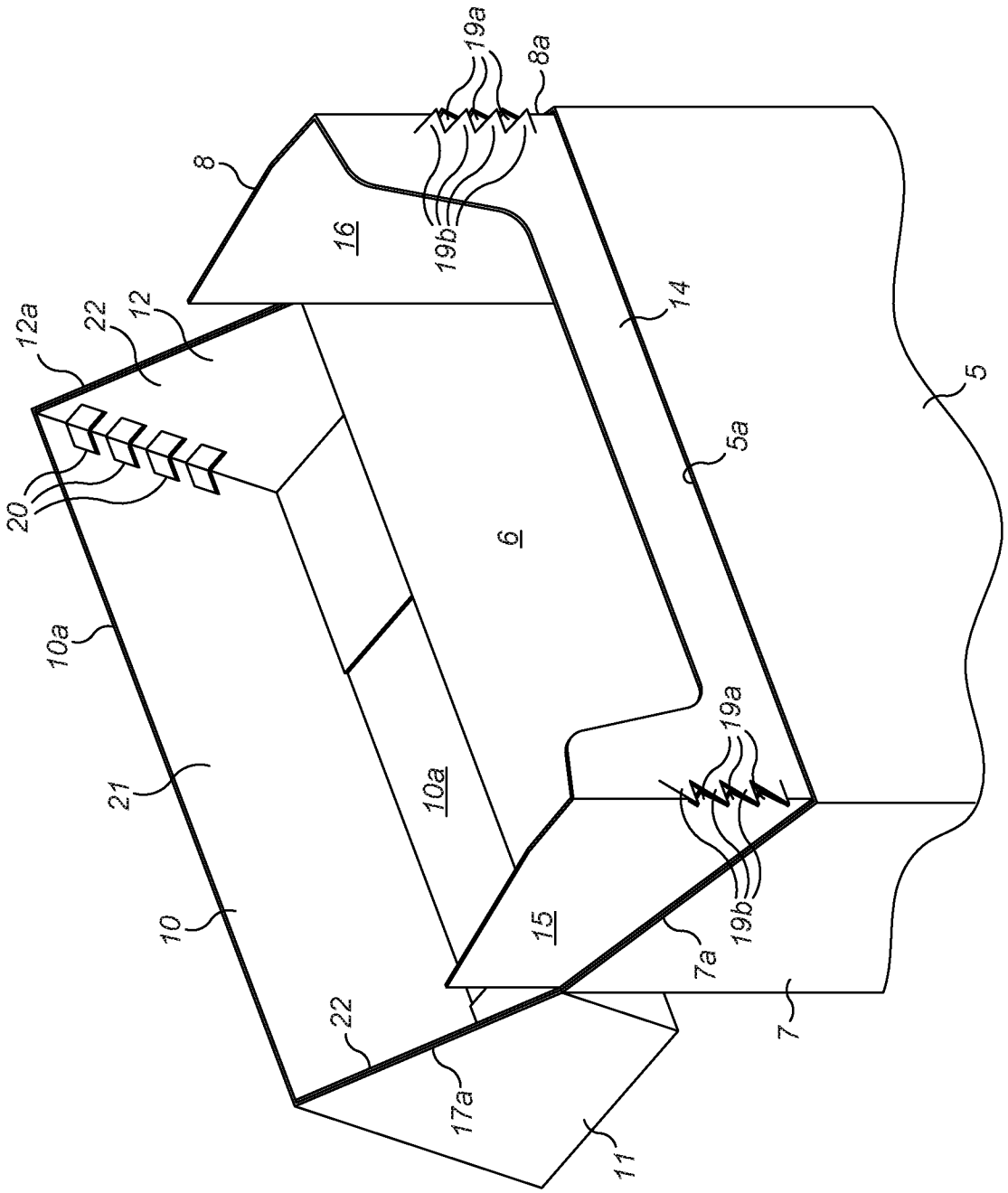
19a
8a
8
16
19b
14
12a
22
12
5
20
5a
6
10a
10a
21
19a
10
15
19b
7a
22
7
17a
11

FIG. 2

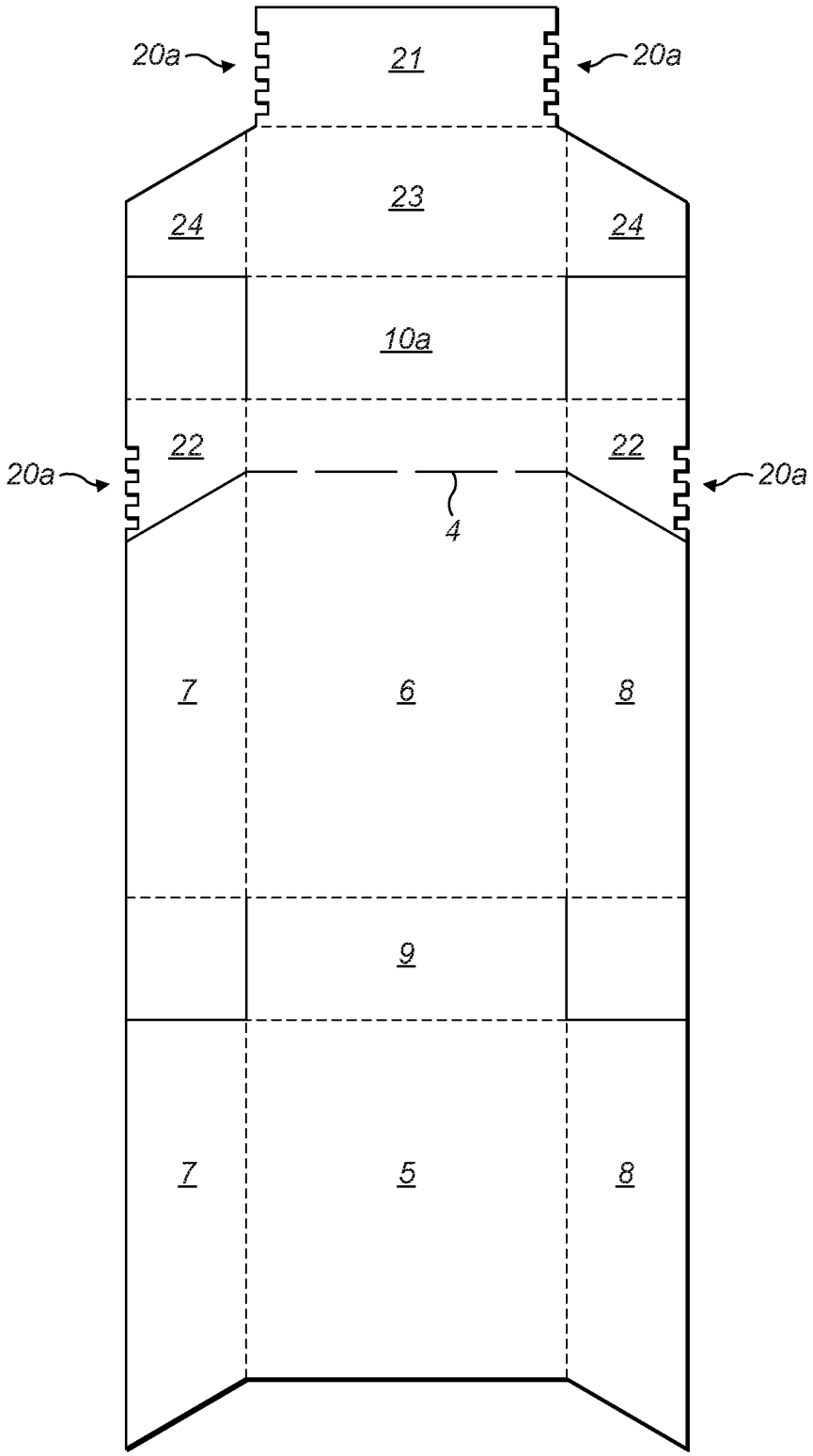

FIG. 3

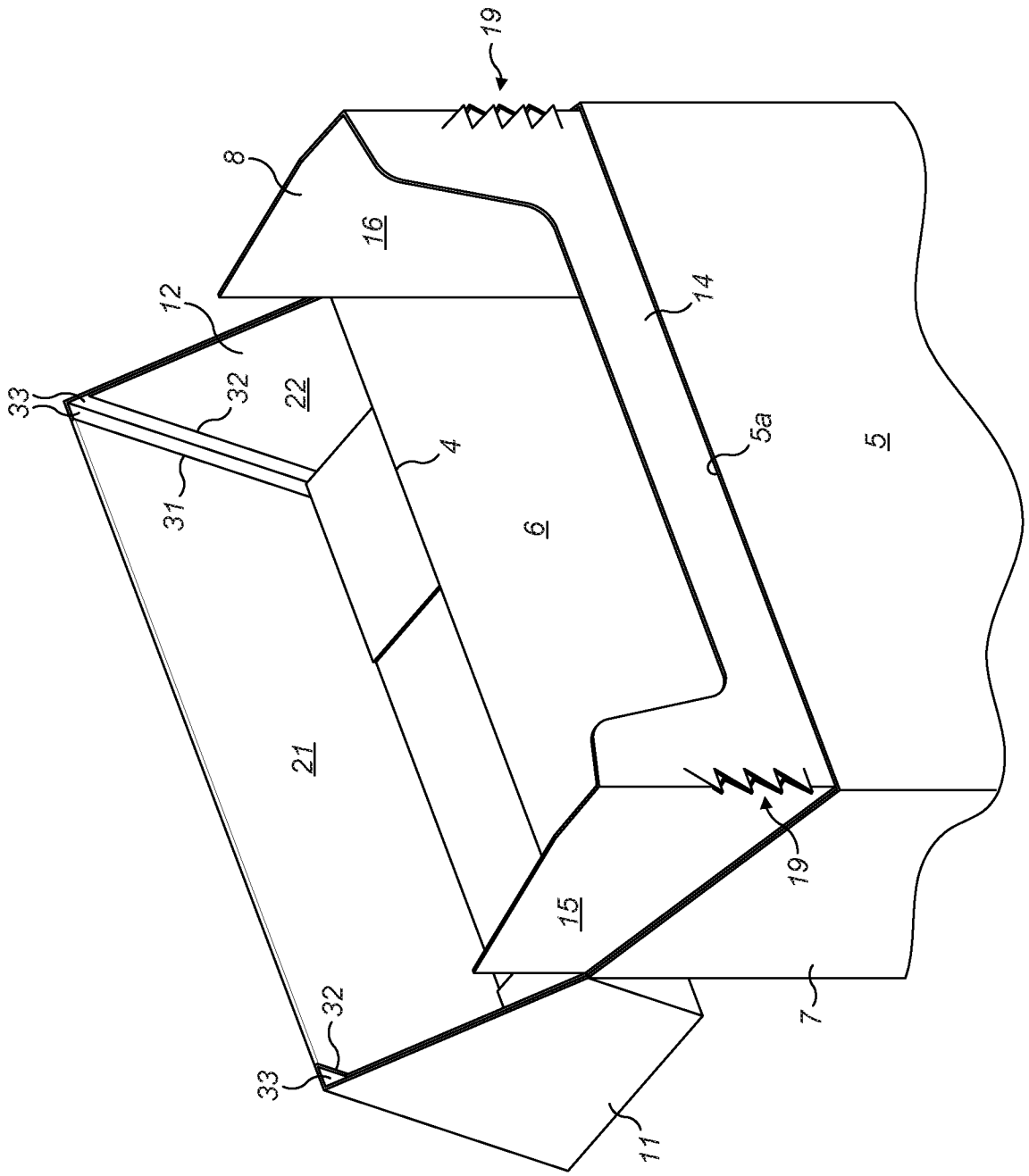

FIG. 4

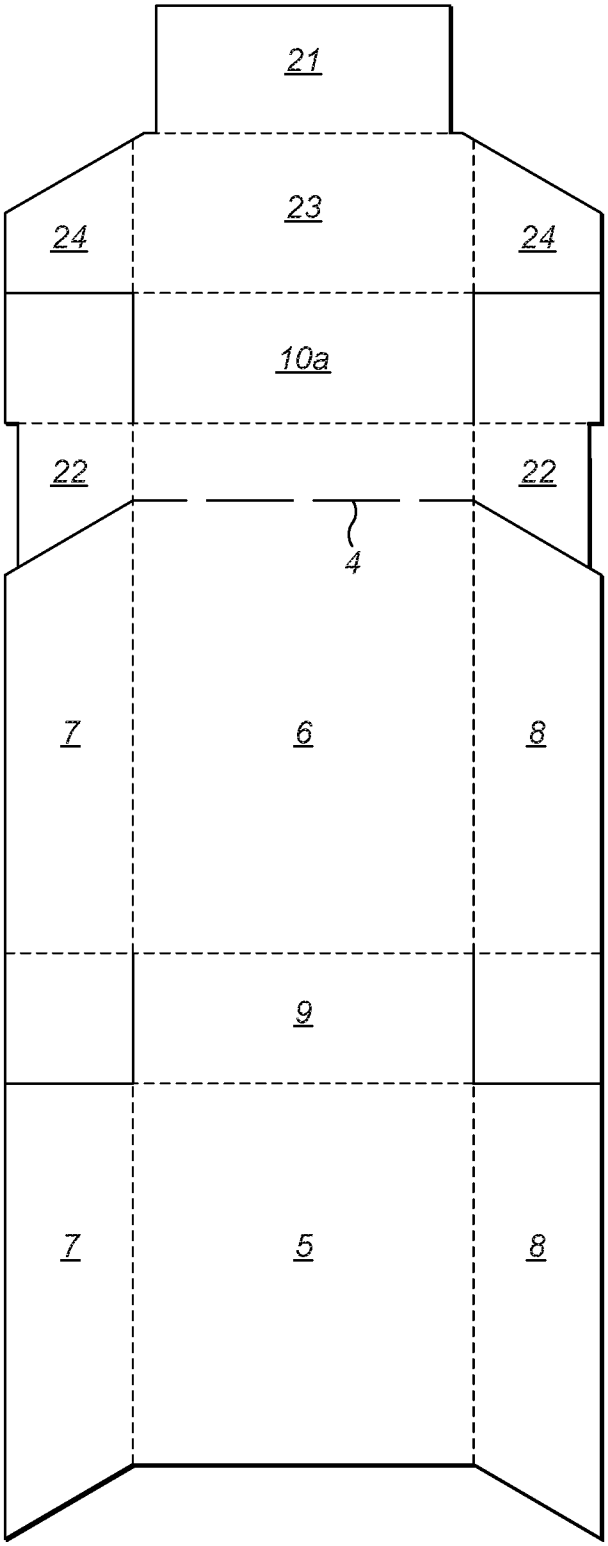

FIG. 5

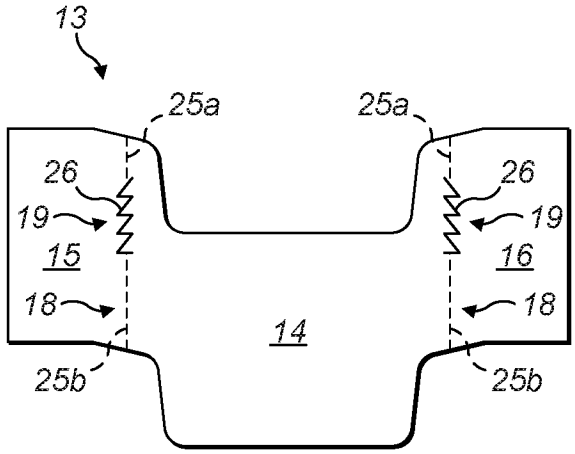

FIG. 6

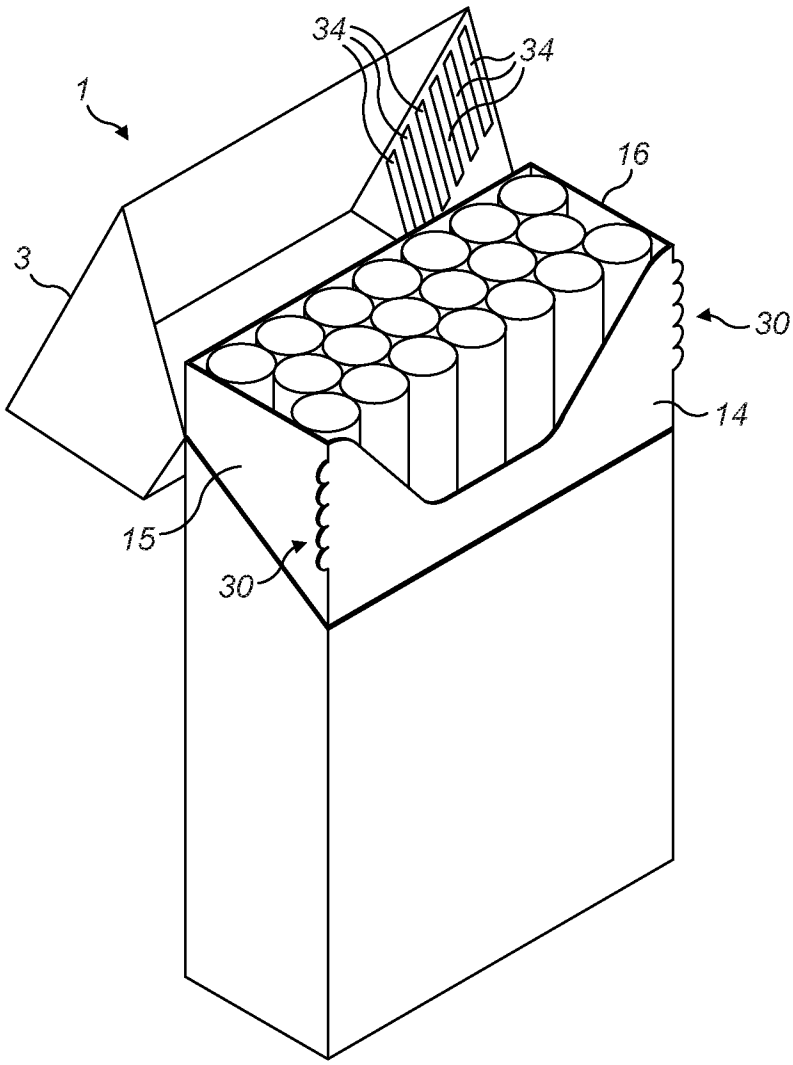

FIG. 7

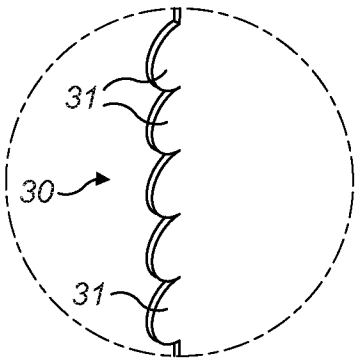

FIG. 7A

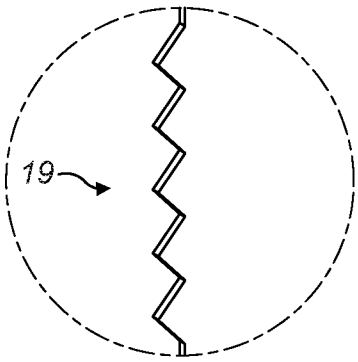

FIG. 7B

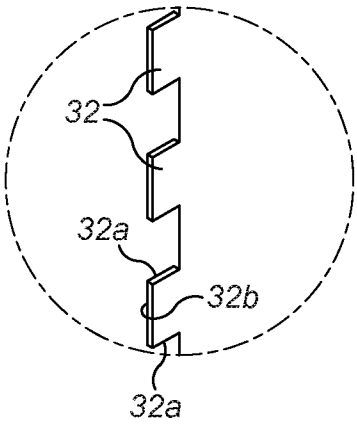

FIG. 7C

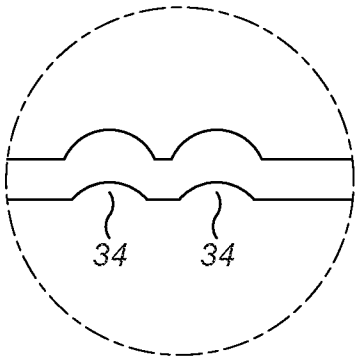

FIG. 8

INTERNATIONAL SEARCH REPORT

International application No
PCT/GB2020/050144

A. CLASSIFICATION OF SUBJECT MATTER
INV. B65D85/10
ADD.

According to International Patent Classification (IPC) or to both national classification and IPC

B. FIELDS SEARCHED

Minimum documentation searched (classification system followed by classification symbols)
B65D

Documentation searched other than minimum documentation to the extent that such documents are included in the fields searched

Electronic data base consulted during the international search (name of data base and, where practicable, search terms used)
EPO-Internal, WPI Data

C. DOCUMENTS CONSIDERED TO BE RELEVANT

Category*	Citation of document, with indication, where appropriate, of the relevant passages	Relevant to claim No.
X	WO 2013/117283 A1 (BRITISH AMERICAN TOBACCO CO [GB]) 15 August 2013 (2013-08-15)	1,5-10, 12-18, 20,21
Y	figures 1-10	2,4,11

X	WO 2009/127487 A1 (BRITISH AMERICAN TOBACCO CO [GB]; HOLFORD STEVEN [GB]) 22 October 2009 (2009-10-22)	19
Y	page 9, line 26 - page 10, line 5; figures 4-6	2-4,11

Y	WO 2010/063569 A1 (BRITISH AMERICAN TOBACCO CO [GB]; GIBSON PAUL [GB]) 10 June 2010 (2010-06-10) figures 6-10	3,4

☐ Further documents are listed in the continuation of Box C.

☒ See patent family annex.

* Special categories of cited documents :

"A" document defining the general state of the art which is not considered to be of particular relevance

"E" earlier application or patent but published on or after the international filing date

"L" document which may throw doubts on priority claim(s) or which is cited to establish the publication date of another citation or other special reason (as specified)

"O" document referring to an oral disclosure, use, exhibition or other means

"P" document published prior to the international filing date but later than the priority date claimed

"T" later document published after the international filing date or priority date and not in conflict with the application but cited to understand the principle or theory underlying the invention

"X" document of particular relevance; the claimed invention cannot be considered novel or cannot be considered to involve an inventive step when the document is taken alone

"Y" document of particular relevance; the claimed invention cannot be considered to involve an inventive step when the document is combined with one or more other such documents, such combination being obvious to a person skilled in the art

"&" document member of the same patent family

Date of the actual completion of the international search	Date of mailing of the international search report
23 March 2020	02/04/2020

Name and mailing address of the ISA/	Authorized officer
European Patent Office, P.B. 5818 Patentlaan 2 NL - 2280 HV Rijswijk Tel. (+31-70) 340-2040, Fax: (+31-70) 340-3016	Jervelund, Niels

1

INTERNATIONAL SEARCH REPORT

Information on patent family members

International application No
PCT/GB2020/050144

Patent document cited in search report	Publication date	Patent family member(s)	Publication date
WO 2013117283 A1	15-08-2013	EP 2812265 A1	17-12-2014
		JP 5919397 B2	18-05-2016
		JP 2015509892 A	02-04-2015
		RU 2014136189 A	27-03-2016
		US 2014374291 A1	25-12-2014
		WO 2013117283 A1	15-08-2013
WO 2009127487 A1	22-10-2009	AR 071473 A1	23-06-2010
		AU 2009237827 A1	22-10-2009
		BR PI0909246 A2	25-08-2015
		CA 2718751 A1	22-10-2009
		CL 2009000839 A1	07-01-2011
		CN 102046480 A	04-05-2011
		EP 2285701 A1	23-02-2011
		JP 5460693 B2	02-04-2014
		JP 2011516359 A	26-05-2011
		KR 20110002477 A	07-01-2011
		RU 2010145993 A	20-05-2012
		TW 201002223 A	16-01-2010
		UA 103320 C2	10-10-2013
		US 2011155596 A1	30-06-2011
		WO 2009127487 A1	22-10-2009
		ZA 201006569 B	26-02-2014
WO 2010063569 A1	10-06-2010	AR 074552 A1	26-01-2011
		AU 2009321647 A1	23-06-2011
		BR PI0923265 A2	22-05-2018
		CA 2744488 A1	10-06-2010
		CL 2011001314 A1	13-01-2012
		CN 102239088 A	09-11-2011
		EP 2382136 A1	02-11-2011
		ES 2524471 T3	09-12-2014
		JP 2012510934 A	17-05-2012
		KR 20110096050 A	26-08-2011
		RU 2011127045 A	10-01-2013
		UA 103350 C2	10-10-2013
		US 2012000801 A1	05-01-2012
		WO 2010063569 A1	10-06-2010
		ZA 201103996 B	26-11-2014