US 20030140442A1

(19) United States

(12) Patent Application Publication (10) Pub. No.: US 2003/0140442 A1

Aoyama (43) Pub. Date: Jul. 31, 2003

(54) TOOTHBRUSH HEAD

(76) Inventor: Yoshihiro Aoyama, Tokyo (JP)

Correspondence Address:
RADER FISHMAN & GRAUER PLLC
LION BUILDING
1233 20TH STREET N.W., SUITE 501
WASHINGTON, DC 20036 (US)

(21) Appl. No.: 10/341,579

(22) Filed: Jan. 14, 2003

(30) Foreign Application Priority Data

Jan. 31, 2002 (JP) 2002-23576

Publication Classification

(51) Int. Cl.[7] A46B 9/04

(52) U.S. Cl. 15/167.1; 15/202; 15/194; 15/210.1; 15/244.1

(57) ABSTRACT

Provided is a toothbrush head which enables a single toothbrush to cope with any individual user's oral condition. The toothbrush head has bristle bundles, sponge pieces or the like implanted herein as a cleaning element on the bristling surface and contains unbristling areas formed on the bristling surface. Some or all of the bristle bundles are implanted asymmetrically with respect to the major central axis or the minor central axis of the head. The head can contain as separate parts bristling areas having bristle implanted therein and unbristling areas, which are removably attached to the head.

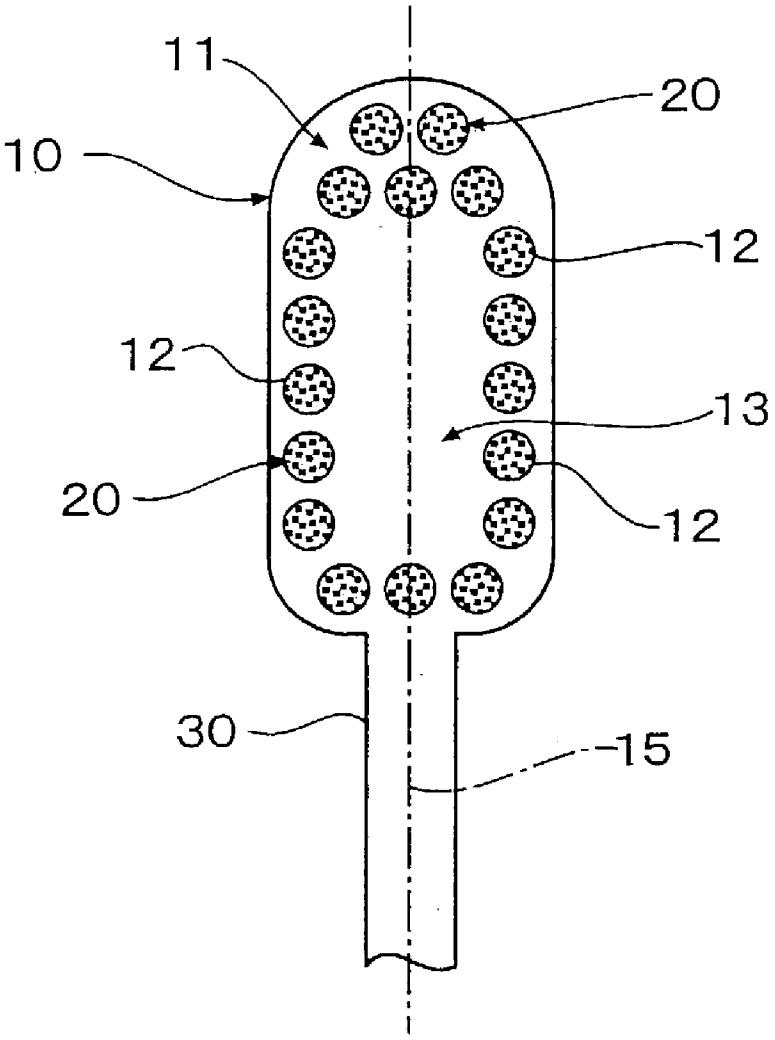

Fig. 1

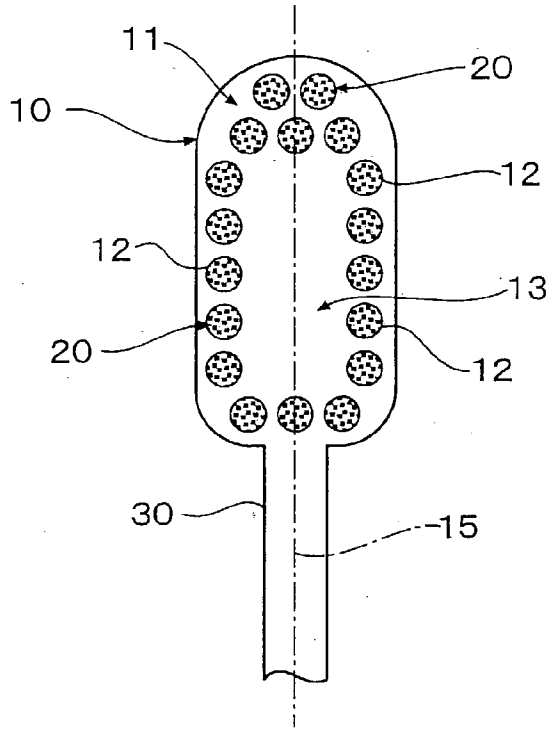

Fig. 2

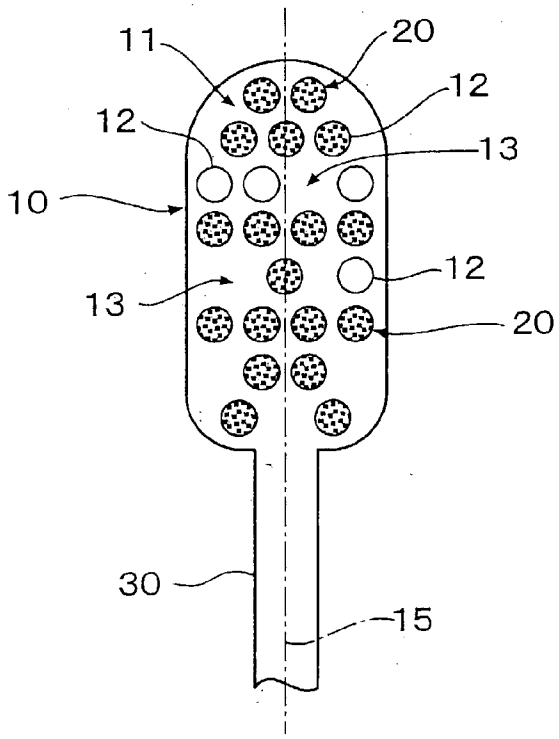

Fig. 3

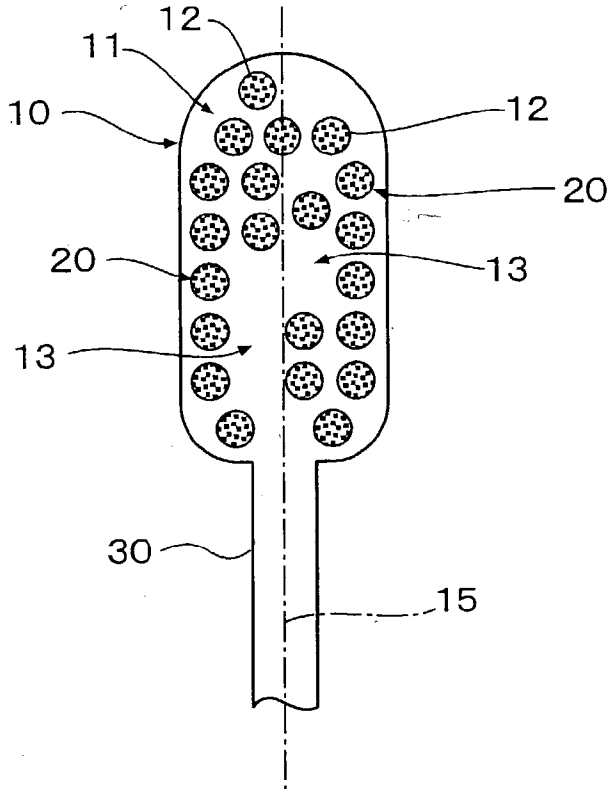

Fig. 4

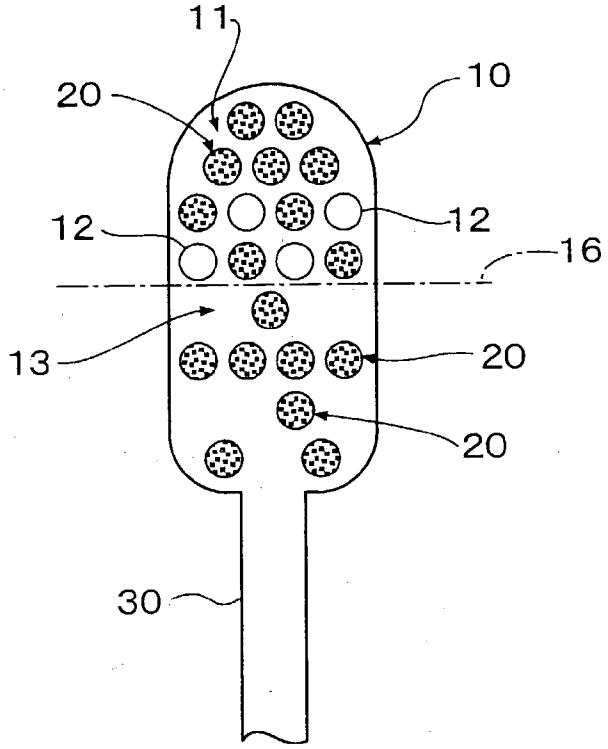

Fig. 5

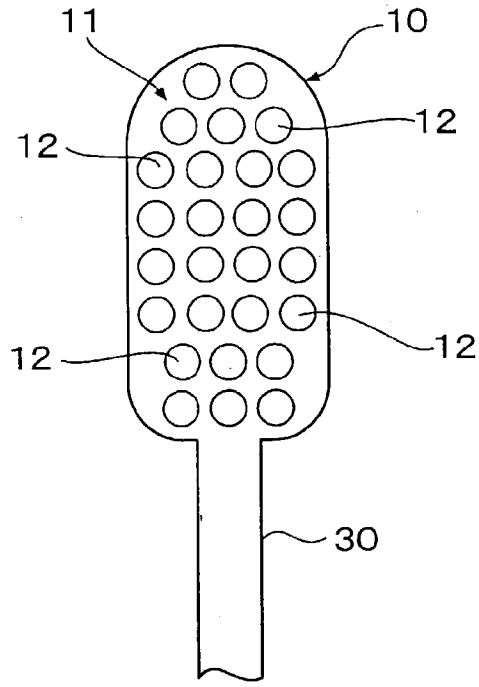

Fig. 6

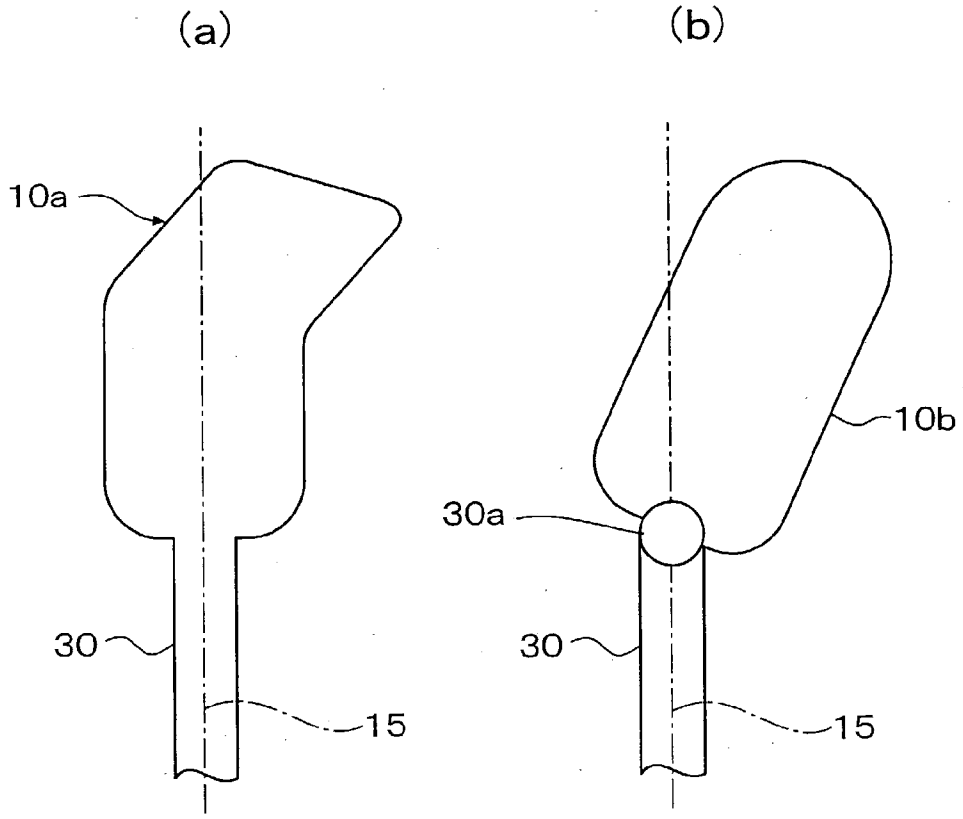

Fig. 7

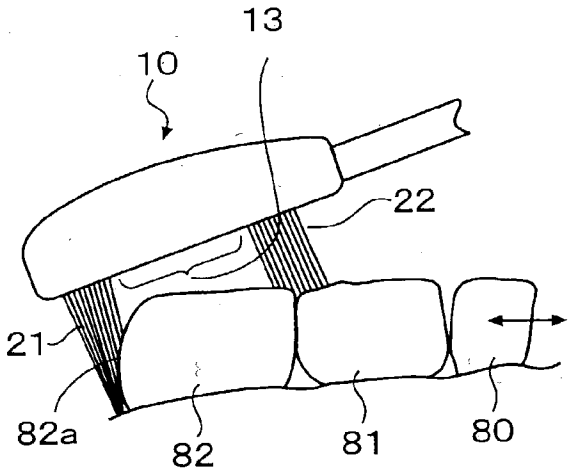

Fig. 8

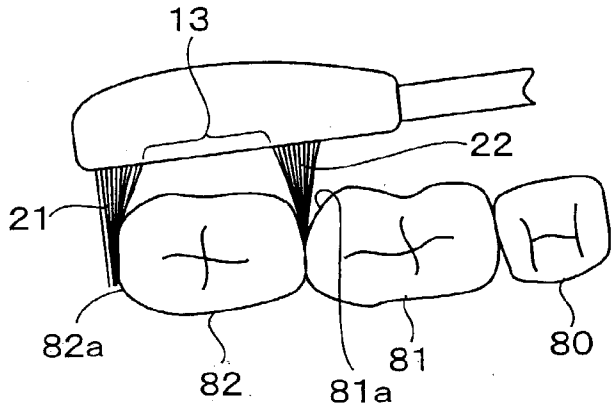

Fig. 9

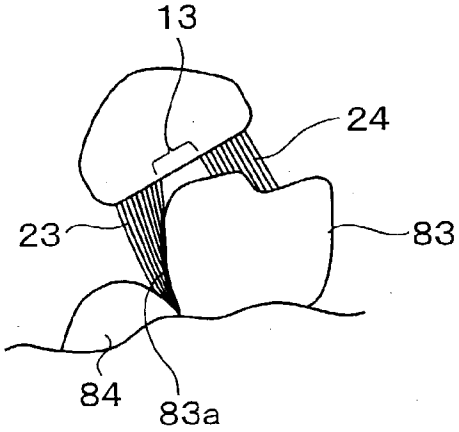

Fig. 10

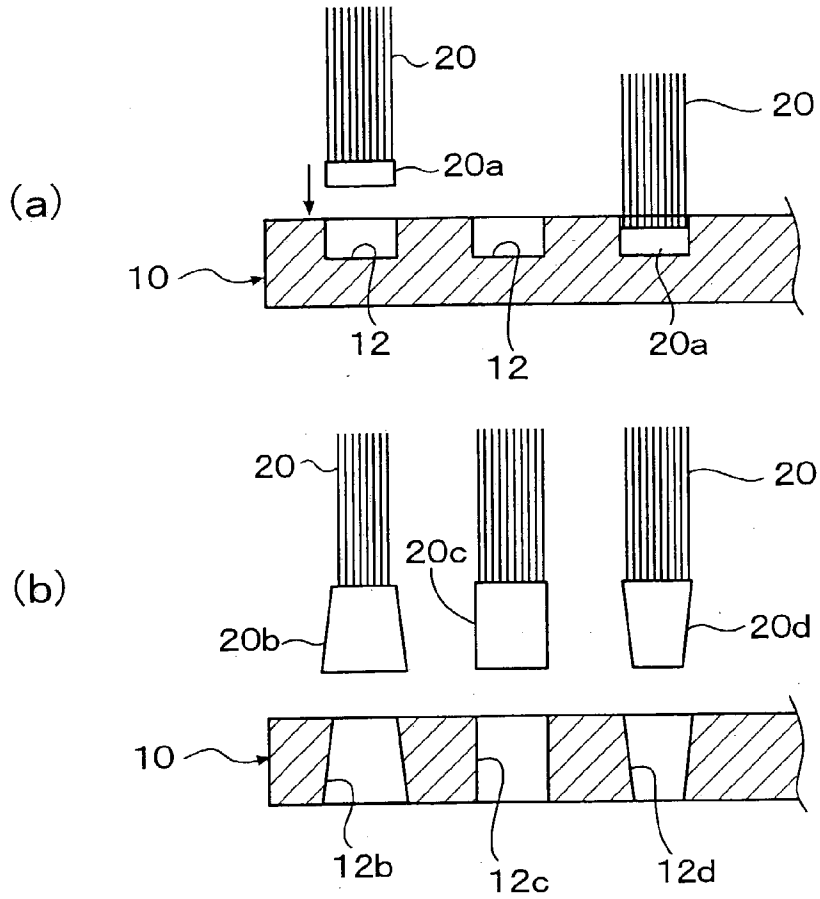
(a)
20
20a
20
10
12
12
20a
(b)
20
20c
20
20b
20d
10
12b
12c
12d

Fig. 11

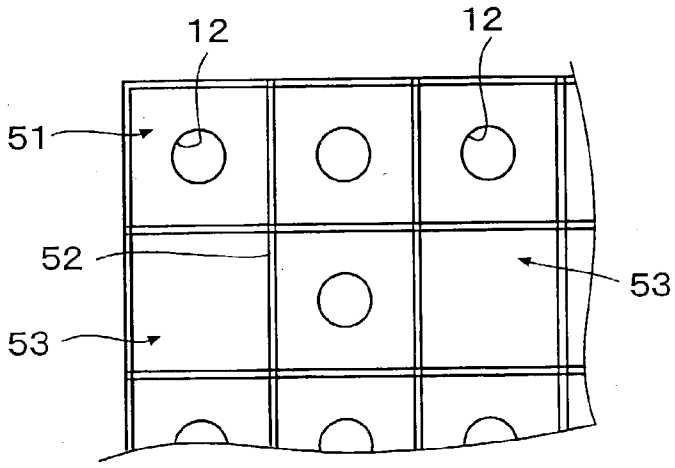
12
12
51
52
53
53

Fig. 12

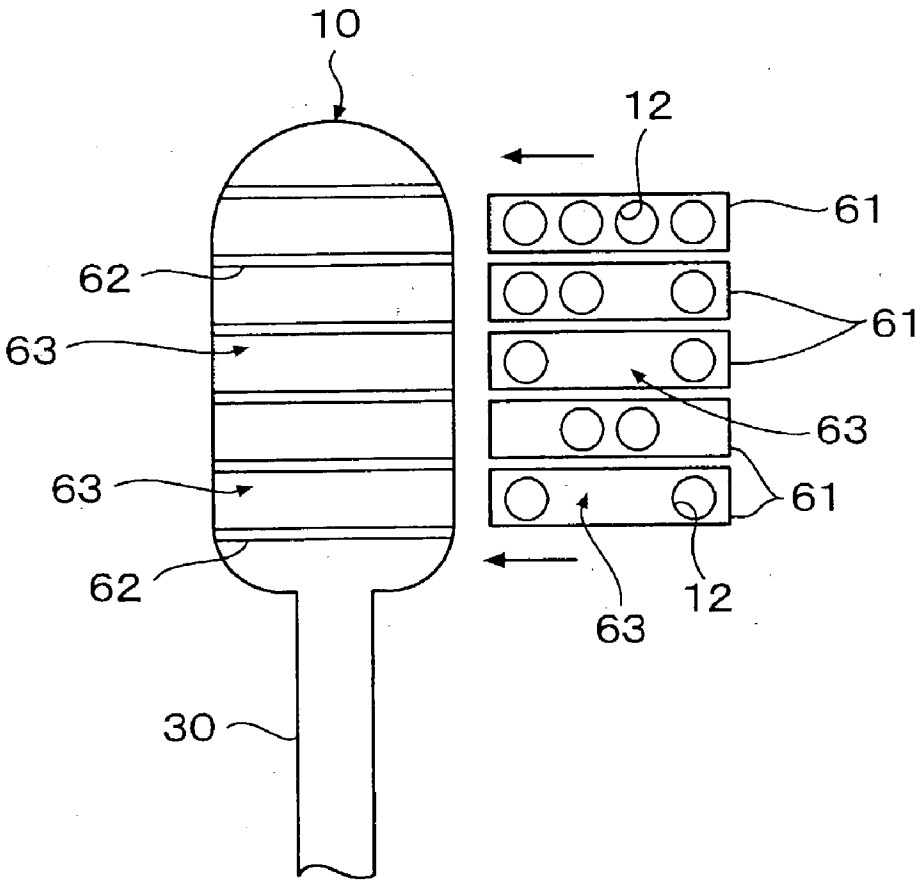

Fig. 13

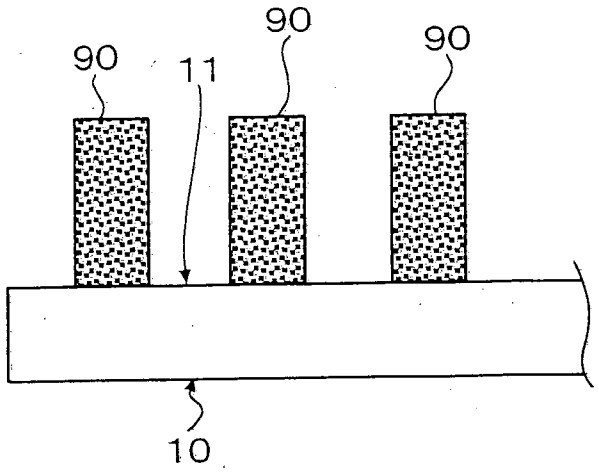

Fig. 14

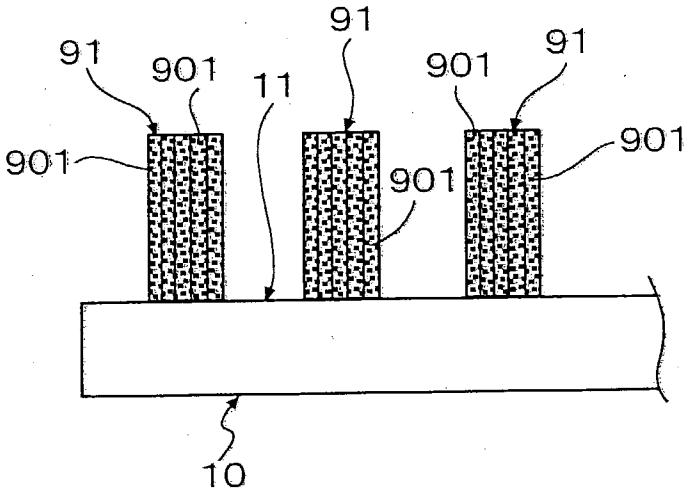

Fig. 15

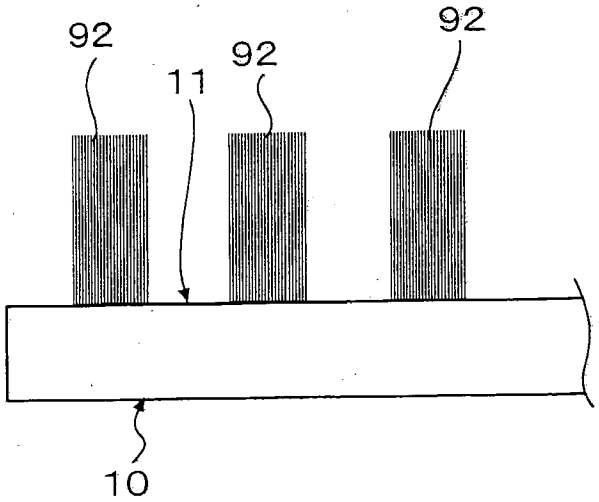

Fig. 16

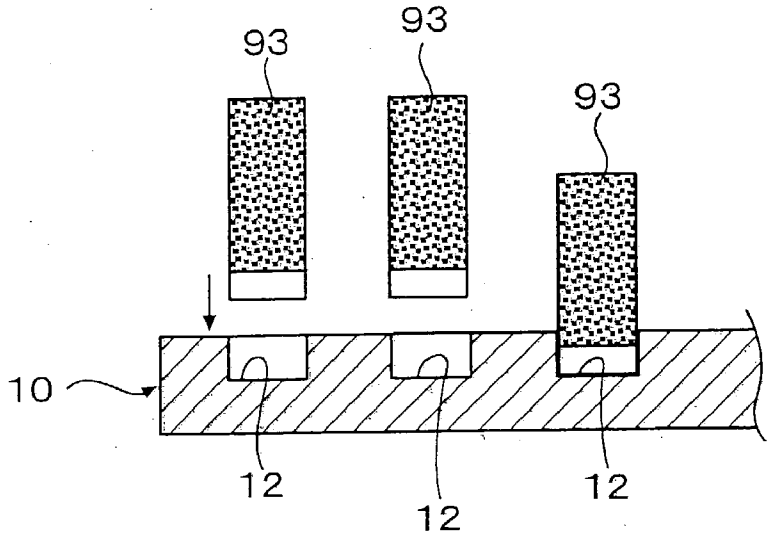

Fig. 17

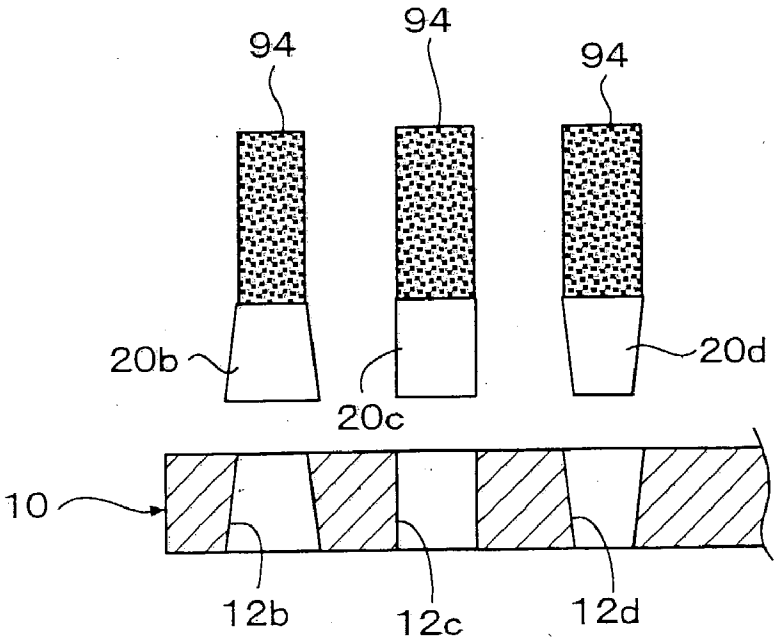

TOOTHBRUSH HEAD

BACKGROUND OF THE INVENTION

[0001] 1. Field of the Invention

[0002] The present invention relates to a toothbrush head which enables a single toothbrush to cope with buccal specificity of any individual user.

[0003] The difficulty and the degree of sufficiency in tooth brushing differ depending on various oral conditions including dentition, tooth form, occlusion, tongue size and muscles around the mouth which differ from person to person. Further, the tips of bristles of a toothbrush are brought into contact with the teeth in different manners between the upper row of teeth and the lower row of teeth or between the right row of teeth and the left row of teeth depending on characteristics of an individual user, for example, dextrality or sinistrality and force of the user which may differ between male and female. Thus, a toothbrush is used under different conditions.

[0004] 2. Description of the Related Art

[0005] Meanwhile, conventional toothbrushes are manufactured for everybody, so that they rarely meet fully specific oral conditions of individual users'. Thus, every user cannot clean his or her teeth completely using a single toothbrush but fail to feel refreshed or satisfied unless the user uses auxiliary cleaning utensils such as interdental brush.

[0006] Under such circumstances, contrivances have been made in toothbrushes with respect to bristles to be implanted in the head in terms of implanting method, kind of bristles, density, configuration of bristle tips, etc. However, bundles of bristles are implanted symmetrically with respect to the major axis (axis in the longitudinal direction) in each toothbrush at equal intervals.

[0007] However, cleaning of teeth using an auxiliary cleaning utensil makes the tooth-brushing operation troublesome and can lead to lowering of positive attitude to tooth-brushing or reduction of tooth-brushing frequency. In spite of the contrivances made in the conventional toothbrushes in terms of the method of implanting bristles, the kind of bristles, etc., the conventional toothbrushes fail to achieve sufficient intraoral cleaning. In addition, it can happen that the bristles implanted in the head injure teeth and gums.

SUMMARY OF THE INVENTION

[0008] Therefore, the present invention is directed to providing a toothbrush head which enables a single toothbrush to cope with oral conditions of any individual user as much as possible.

[0009] In order to solve the problems described above, the gist of the present invention is to provide a toothbrush head having bristle bundles implanted in it on the bristling surface thereof, characterized in that the head contains an unbristling area defined on the bristling surface.

[0010] The toothbrush head is also characterized in that some or all of the bristle bundles are implanted asymmetrically with respect to the major central axis of the head.

[0011] The toothbrush head is also characterized in that some or all of the bristle bundles are implanted asymmetrically with respect to the minor central axis of the head.

[0012] The toothbrush head is also characterized in that it has as separate parts a bristling area having a bristle bundle implanted therein and an unbristling area, and these parts are removably attached to the head.

[0013] The toothbrush head is also characterized in that it is bent at the distal end thereof.

[0014] The toothbrush head is also characterized in that the head is attached to the neck of a toothbrush so that it pivots with respect to the neck.

[0015] The toothbrush head is also characterized in that a sponge-like cleaning element is implanted therein on the bristling surface in place of the bristle bundles.

[0016] Other aspects and advantages of the present invention will become apparent from the following description, taken in conjunction with the accompanying drawings illustrated by way of examples the principles of the invention.

BRIEF DESCRIPTION OF THE DRAWINGS

[0017] The present invention together with the objects and advantages thereof, may best be understood by reference to the following description of the presently preferred embodiments together with the accompanying drawings in which:

[0018] **FIG. 1** is a plan view showing a toothbrush head according to a first embodiment of the present invention;

[0019] **FIG. 2** is a plan view showing another exemplary toothbrush head according to the first embodiment;

[0020] **FIG. 3** is a plan view showing a toothbrush head according to a second embodiment of the present invention;

[0021] **FIG. 4** is a plan view showing another exemplary toothbrush head according to the second embodiment;

[0022] **FIG. 5** is a plan view showing a toothbrush head according to another embodiment of the present invention;

[0023] FIGS. **6**(*a*) and **6**(*b*) are plan views each showing a toothbrush head according to another embodiment of the present invention;

[0024] **FIG. 7** is a schematic view of the toothbrush head of the present invention showing the state where teeth are cleaned therewith; **FIG. 8** is a schematic view of the toothbrush head of the present invention also showing the state where teeth are brushed therewith;

[0025] **FIG. 9** is a schematic view of the toothbrush head of the present invention also showing the state where teeth are brushed therewith;

[0026] FIGS. **10**(*a*) and **10**(*b*) are explanatory drawings each showing a method of implanting bristle bundles in the head;

[0027] **FIG. 11** is an explanatory drawing showing another method of implanting bristle bundles in the head;

[0028] **FIG. 12** is an explanatory drawing showing another method of implanting bristle bundles in the head;

[0029] **FIG. 13** is a partial side view of the head having sponge pieces implanted therein on the upper surface thereof;

[0030] **FIG. 14** is a partial side view of the head having bundles of sponge slivers implanted therein on the upper surface thereof;

[0031] **FIG. 15** is a partial side view of the head having dense mass of fine fibers implanted therein on the upper surface thereof;

[0032] **FIG. 16** is a drawing explaining a method of implanting sponge pieces in the head; and

[0033] **FIG. 17** is a drawing explaining other methods of implanting bundles of sponge pieces in the head.

DETAILED DESCRIPTION OF THE PREFERRED EMBODIMENTS

[0034] The toothbrush head according to a first embodiment of the present invention will be described below referring to the attached drawings.

[0035] **FIG. 1** is a plan view showing a bristling surface of a toothbrush head according to the first embodiment of the present invention; and **FIG. 2** is a plan view showing another exemplary toothbrush head of the first embodiment.

[0036] In the first embodiment shown in **FIG. 1**, the head **10** formed at the distal end of a neck **30** of a toothbrush contains a multiplicity of holes **12** defined on a bristling surface **11** (a surface of the head where bristle bundles are to be implanted), and a bristle bundle **20** is implanted in each hole **12**. The holes **12** are defined on the bristling surface **11** of the head **10** so that they are arranged in the axial direction symmetrically with respect to the major central axis **15** except for the central area formed as an unbristling area **13** (an area where no bristle bundles are to be implanted).

[0037] In this embodiment, as well as, in other embodiments to be described below, while no bristles are implanted in the unbristling area **13**, the unbristling area **13** is not limited to this configuration but includes those cases where the unbristling area **13** has short bristles implanted therein such that they do not interfere with actions of the bristle bundles **20**. The actions of the bristle bundles **20** will be described later.

[0038] In another example of the first embodiment shown in **FIG. 2**, the bristle bundles **20** are implanted in the holes **12** symmetrically with respect to the major central axis of the head **10**. However, what is different from the above embodiment is the manner of forming unbristling areas **13**.

[0039] In a second embodiment shown in **FIG. 3**, the head **10** has holes **12** defined on the bristling surface **11** thereof asymmetrically with respect to the major central axis **15** and bristle bundles implanted therein with unbristling areas **13** being formed irregularly between the bristle bundles **20**.

[0040] In another example of the second embodiment shown in **FIG. 4**, the head **10** has holes **12** defined on the bristling surface **11** thereof asymmetrically with respect to the minor central axis **16** and bristle bundles **20** implanted therein with unbristling areas **13** being formed irregularly between bristle bundles **20**.

[0041] The implanting method used in the first and second embodiments is to define holes **12** at predetermined positions on the bristling surface **11** of the head **10** depending on dentition and other oral conditions of an individual user, and then to implant bristle bundles **20** in these holes **12**.

[0042] There is another method employable here to define holes **12** partly or entirely over the bristling surface **11** of the head **10**, as shown in **FIG. 5** and then to implant bristle bundles **20** selectively in predetermined holes **12**.

[0043] Otherwise, bristle bundles **20** may be implanted in all of these holes **12**, and a dentist and the like may pull out predetermined bundles **20** to define unbristling areas **13** on the head depending on the oral condition of an individual user.

[0044] Further, in a head **10***a* shown in **FIG. 6**(*a*), the head **10***a* is bent at the distal end portion horizontally rightward or leftward with respect to the major central axis **15**. This head **10***a* can cope more exactly with dentition and other specific tooth conditions of an individual user.

[0045] When a toothbrush is used, the head **10***a* is normally inserted through the lips into the buccal cavity diagonally with respect to the plane of occlusion. More specifically, the bristles of the toothbrush are brought into contact with teeth and gums diagonally. Therefore, it is necessary to implant bristles diagonally (asymmetrically) in the head or to change the angle of at least a part of the head with respect to the neck of the toothbrush so as to compensate for the contact angle of the bristles and to bring them into contact with the surfaces of teeth and of gums at right angle.

[0046] Another head **10***b* shown in **FIG. 6**(*b*) is fixed to a neck **30** of a toothbrush with a pivot **30***a* so that the head **10***b* can entirely be pivoted horizontally rightward or leftward with respect to the major central axis **15**. This head **10***b* can cope more exactly with dentition and other specific tooth conditions of an individual user.

[0047] The manner of cleaning teeth with the toothbrush head **10** having the constitution as described above will be described referring to the schematic views shown in FIGS. **7** to **9**.

[0048] **FIG. 7** shows a state where the rear side (distal portion) **82***a* of the distal molar tooth **82** is being cleaned. Here, the fore bristle bundles **21** on the head **10** are brought into contact with the rear side **82***a* to enable cleaning of it.

[0049] More specifically, since the conventional toothbrushes have no unbristling areas **13** but have bristles implanted therein entirely over the bristling surface, the bristles present in the area corresponding to the unbristling areas **13** of the present invention are brought into contact with the upper surface of the tooth **82** to urge the head **10** upward and prevent the fore bristle bundles from coming deep downward, so that the tips of the fore bristle bundles cannot reach fully the lower end of the rear side **82***a*.

[0050] However, by virtue of the unbristling area **13** formed in this embodiment, the fore bristle bundles **21** on the head **10** can reach the lower end of the rear side **82***a* of the tooth **82** to achieve sufficient cleaning thereof.

[0051] **FIG. 8** shows the plane of occlusion of the molar teeth **80**, **81** and **82**, where the rear side **82***a* of the distal molar tooth **82** and the gap **81***a* between the tooth **82** and the tooth **81** (adjoining portions) are being cleaned. Here again, the fore bristle bundles **21** of the head **10** are brought into contact with the rear side **82***a* to enable cleaning of it, while the tips of the rear bristle bundles **22** are intruding into the gap **81***a* between the tooth **81** and the tooth **82** to clean it.

[0052] It can be appreciated from **FIG. 8** that, by virtue of the presence of the unbristling area, the fore bristle bundles **21** and the rear bristle bundles **22** on the head **10** can clean the rear side **82***a* of the tooth **82** and the gap **81***a* between the teeth, respectively.

[0053] **FIG. 9** shows actions of side bristle bundles **23** and **24** on the head **10**, where the bristle bundles **23** and **24** are cleaning the gap (pocket) **83***a* present between the tooth **83** and the tooth **84**. It can be appreciated here again that, by virtue of the presence of the unbristling area **13**, the tips of the side bristle bundles **23** on the head **10** can clean the gap **83***a* between the tooth **83** and the tooth **84**.

[0054] As described above, in the toothbrush head according to this embodiment, tips of bristles can be allowed to reach those areas which fail to be brought into contact with bristles of conventional toothbrushes depending on the way of using a toothbrush by an individual user such as lateral faces of molar teeth and gaps between them. Thus, if a dentist or the like finds a user's weak point in tooth brushing or unbrushed zones of teeth and then provides the user with a toothbrush with an optimum head having bristle bundles implanted asymmetrically, the user can overcome the difference to be caused depending on dextrality and sinistrality and weak points.

[0055] Next, methods of implanting bristle bundles will be described referring to FIGS. **10** to **12**.

[0056] **FIG. 10**(*a*) shows a method of securing bristle bundles **20** each having a base **20***a* in holes **12** defined beforehand in the head **10**. There are some conceivable manners, one is to fit the base **20***a* of each bristle bundle **20** in the hole **12** and to secure it therein, and another is to bring each base **20***a* into screw engagement with the hole **12**.

[0057] **FIG. 10**(*b*) shows three methods of securing bristle bundles **20** in the holes **12***b*, **12***c* and **12***d*, respectively.

[0058] The left side hole **12***b* in **FIG. 10**(*b*) is widening downward, while the base **20***b* of the bristle bundle **20** is designed to have a configuration such that it can be engaged with the hole **12***b*.

[0059] The middle hole **12***c* has a cylindrical form, and the base **20***c* of the bristle bundle **20** is designed to have a configuration such that it can be engaged with the hole **12***c*. In this case, the base **20***c* may have on the lower surface thereof a fixing plate (not shown) which is larger than the bottom of the base **20***c*.

[0060] The right hole **12***d* shown in **FIG. 10**(*b*) is widening upward, and the base **20***d* of the bristle bundle **20** is designed to have a configuration such that it can be engaged with the hole **12***d*.

[0061] The bases **20***b*, **20***c* and **20***d* having the configurations described above are secured in the holes **12***b*, **12***c* and **12***d* defined in the heads **10**, respectively, by means of fitting or screw engagement.

[0062] Another head **10** shown in **FIG. 11** has a gridiron framework **52** formed on the surface thereof, and is provided with blocks **51** each containing a hole **12**, which are prepared as separate parts. These blocks **51** are each fitted in the sections of the framework **52**, and then a bristle bundle **20** is secured in each hole **12**. Of course, a bristle bundle **20** may be implanted beforehand in the hole **12** in each block **51**.

[0063] In this case, some sections have no block **51** fitted therein to constitute unbristling areas **53**.

[0064] Another head **10** shown in **FIG. 12** has parallel frame members **62** on a surface of the head **10**, and is provided with oblong blocks **61** which are prepared as separate parts each containing holes **12** at desired positions. Each block **61** is fitted between a pair of frame members **62**, and then a bristle bundle **20** is secured in each hole **12** of the block **61**. It is of course possible to implant beforehand a bristle bundle **20** in each hole **12** of the blocks **61**.

[0065] Further, in this case, no block **61** may be fitted between a certain pair of frame members **62** to define an unbristling area **63**. However, some blocks **61** may have both bristling areas and unbristling areas **63** depending on the number and positions of the holes **12** to be defined therein.

[0066] The heads **10** and **10***a* described in the above embodiments are employable not only in ordinary toothbrushes but also in ultrasonic power toothbrushes.

[0067] **FIG. 13** shows a head **10** having rectangular sponge pieces **90** implanted therein as a sponge-like cleaning element in place of bristle bundles **20**.

[0068] According to this example, the surfaces of the sponge pieces **90** are brought into face contact with teeth and gums, so that they scarcely irritate and injure the teeth and gums compared with bristle bundles **20**, and the area of contact increases, effectively

[0069] The sponge-like cleaning element is one directed to obtaining cleaning or massaging effects and is formed using an artificial material such as an elastic or anelastic polymeric material or a naturally occurring material and by allowing such a material to assume the form of porous sponge or by cutting finely a silicone material and the like to obtain an assembly of slivers which as a whole look like a lump.

[0070] Since such cleaning elements are soft and can be brought into contact with teeth with an appropriate pressure, they can reach every nook and corner in the mouth without applying excessive stimulation thereto.

[0071] **FIG. 14** also shows another example of sponge-like cleaning element, in which the sponge piece **90** is cut at suitable intervals to form an assembly **91** of sponge slivers **901**. The sponge slivers **901** can cope with any configuration or irregularity of teeth and gums more exactly to exhibit improved cleaning effect.

[0072] In a head shown in **FIG. 15**, fine fibers are implanted densely in the head **10** in place of bristles **20** to form dense masses **92** of fibers. According to this example, since the tips of the fine fibers constitute a surface of the dense mass **92** as if it has no gaps thereon, the surface of each dense mass **92** can be brought into face contact with teeth and gums to scarcely irritate and injure the teeth and gums compared with bristle bundles **20**. The dense mass of fibers **92** may be formed by implanting ultra fine fibers thickly on the upper surface of the head **10** or by securing a rectangular material on the upper surface of the head **10** and cutting it from above to form a dense mass of fibers.

[0073] Next, **FIGS. 16 and 17** show methods of securing sponge pieces **90** to the head **10**, and explanations of them will be omitted, since the sponge pieces **93** and **94** are

implanted in the same manner as described referring to the examples shown in FIGS. **10**(*a*) and **10**(*b*), except that the bristle bundles **20** are merely replaced with the sponge pieces **93** and **94**, respectively.

[**0074**] Further, the assembly **91** of sponge slivers **901** formed by cutting a sponge piece **90** at suitable intervals as shown in **FIG. 14** or the dense mass **92** of fine fibers as shown in **FIG. 15** can also be secured to the head **10** likewise.

[**0075**] As described above, the toothbrush heads of the embodiments of the present invention consider dextrality or sinistrality and other specificity of an individual user, as well as, loss of teeth, to enable a single toothbrush to exhibit improved cleaning effect and also to prevent harmful effects that the conventional toothbrushes frequently give.

[**0076**] Points of cleaning teeth include gaps (pockets) between teeth, distal portions and adjoining portions. Meanwhile, auto-purification is likely to occur on the face of occlusion and axial faces. Although it is naturally possible to brush every nook and corner of teeth with a small converged brush, it takes a tremendous time and is inefficient too.

[**0077**] In view of these circumstances, according to the toothbrush heads of the embodiments of the present invention, toothbrushes can be used stably due to the difference in the density of bristles to be implanted and also due to the presence of unbristling areas, and thus tips of bristles can reach any portion of teeth to be cleaned, enabling a single toothbrush to cope with any individual user's specificity by selectively implanting bristles at desired positions.

[**0078**] If the toothbrush head of this embodiment is divided into a plurality of head segments as described in U.S. Pat. No. 3,051,120, the head can be provided with three or more functional segments such as an action concentrating segment, a head stabilizing segment and a cleaning segment, and thus a single toothbrush can achieve improvement of oral condition.

[**0079**] Further, the unbristling area formed at the center of the head helps stabilization of the head against teeth with a small force to be applied to bristles compared with that to be applied to bristles implanted in the head entirely over a surface thereof. Thus, an excessive force if applied to the head can be dispersed to enable the action concentrating segment to be in more intimate contact with teeth.

[**0080**] As has been described heretofore, according to the present invention, since the positions of implanting bristle bundles, the size and number of bristle bundles, type of bristle tip, thickness of bristles, etc. can be selected or changed freely depending on an individual user's oral condition. Thus, any user can achieve cleaning within the buccal cavity using a single toothbrush having such a head.

[**0081**] Besides, a single type of toothbrush can be adjusted depending on an individual user, and a single type of bristle can be utilized in various manners in terms of effect, force to be applied etc. by defining areas depending on the purpose, leading to saving of materials and reduction in cost.

[**0082**] Further, in the case where sponge pieces or dense masses of fine fibers are implanted in the head as a cleaning element in place of bristle bundles, they can not only prevent effectively injury of teeth and gums but also exhibit massaging effects.

[**0083**] It should be apparent to those skilled in the art that the present invention may be embodied in many other specific forms without departing from the spirit or scope of the invention. Particularly, it should be understood that the invention may be embodied in the following forms. Therefore, the present examples and embodiments are to be considered as illustrative and not restrictive, and the invention is not to be limited to the details given herein, but may be modified within the scope of the appended claims.

What is claimed is:

1. A head of a toothbrush having bristle bundles implanted in it on a bristling surface thereof, the head comprising an unbristling area defined on the bristling surface.

2. A head of a toothbrush having bristle bundles implanted in it on a bristling surface thereof, wherein some or all of the bristle bundles are implanted asymmetrically with respect to a major central axis of the head.

3. A head of a toothbrush having bristle bundles implanted in it on a bristling surface thereof, wherein some or all of the bristle bundles are implanted asymmetrically with respect to a minor central axis of the head.

4. A head of a toothbrush comprising as separate parts a bristling area having a bristle bundle implanted therein and an unbristling area, which are removably attached to the head.

5. The head of a toothbrush according to any of claims **1**, **2**, **3** and **4**, wherein the head is bent at a distal end thereof.

6. The head of a toothbrush according to any of claims **1**, **2**, **3** and **4**, wherein the head is attached to a neck of the toothbrush so that it pivots with respect to the neck.

7. The head of a toothbrush according to any of claims **1**, **2**, **3**, **4**, **5** and **6**, wherein sponge-like cleaning element is implanted therein on the bristling surface in place of the bristle bundles.

* * * * *