Dec. 18, 1923. 1,477,701

N. R. GREEN

BANK PROTECTIVE DEVICE

Filed Jan. 19, 1922

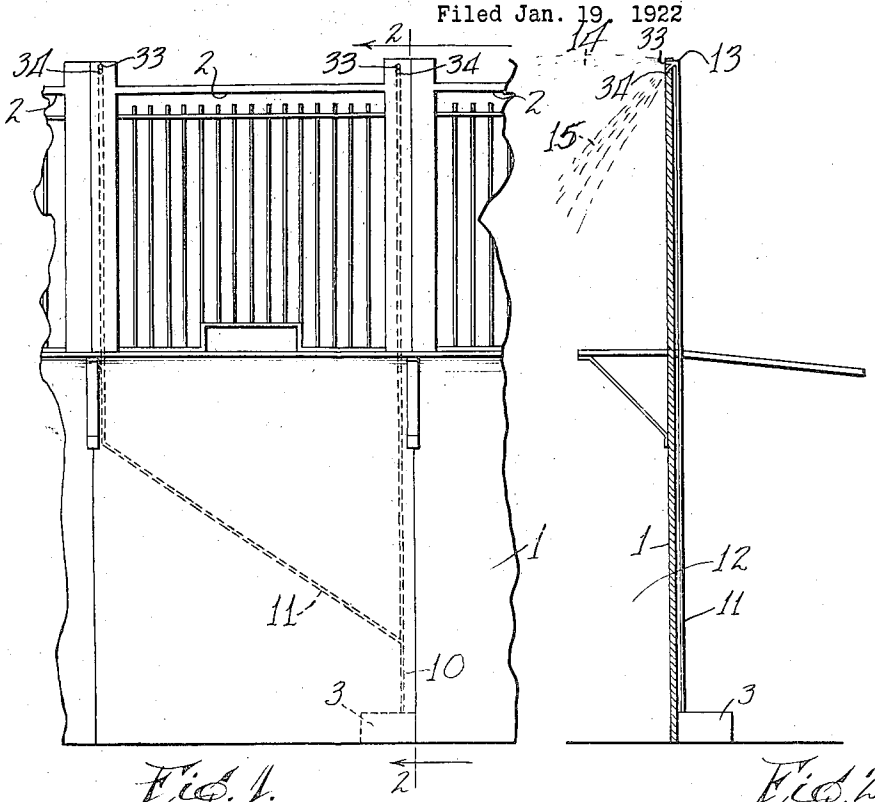

Fig. 1.

Fig. 2.

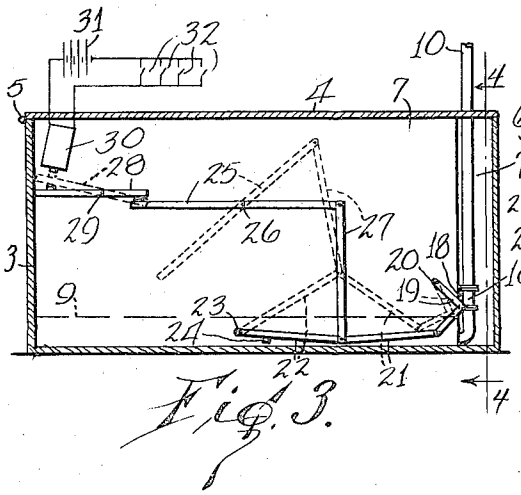

Fig. 3.

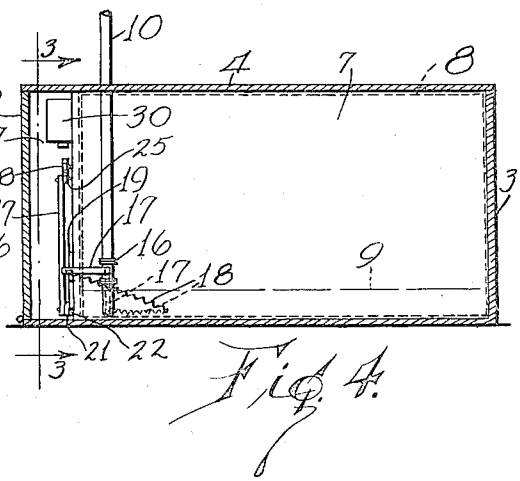

Fig. 4.

INVENTOR

N. R. Green

BY Munn & Co

ATTORNEYS

Patented Dec. 18, 1923. 1,477,701

UNITED STATES PATENT OFFICE.

NATHANIEL R. GREEN, OF SIOUX CITY, IOWA.

BANK-PROTECTIVE DEVICE.

Application filed January 19, 1922. Serial No. 530,489.

To all whom it may concern:

Be it known that I, NATHANIEL R. GREEN, a citizen of the United States, and a resident of Sioux City, in the county of Woodbury and State of Iowa, have invented a new and useful Improvement in Bank-Protective Devices, of which the following is a full, clear, and exact description.

My invention relates to improvements in bank protective devices, and it consists in the combinations, constructions, and arrangements herein described and claimed.

An object of my invention is to provide a bank protective device which has electrically actuated means for automatically spraying a liquid into the face of a holdupman when one of any number of switches in electrical connection with the device is actuated.

A further object of my invention is to provide a device of the character described which makes use of a liquid that is adapted, when sprayed into the face of a person, to temporarily blind him by causing his eyes to water.

A further object of my invention is to provide a device of the character described which is adapted to eject a plurality of liquid sprays in various directions when one of the switches is closed.

A further object of my invention is to provide a device of the character described which has a novel electrically controlled actuating means for permitting the liquid to escape from the device.

A further object of my invention is to provide a device of the character described which is simple in operation, has few moving parts, and which is not likely to easily get out of order.

Other objects and advantages will appear in the following specification, and the novel features of the invention will be particularly pointed out in the appended claims.

My invention is illustrated in the accompanying drawings, forming part of this application, in which

Figure 1 is a front elevation of the ordinary type of bank cage or the like, showing my device operatively applied thereto,

Figure 2 is a section along the line 2—2 of Figure 1,

Figure 3 is a section along the line 3—3 of Figure 4, and

Figure 4 is a section along the line 4—4 of Figure 3.

In carrying out my invention, I make use of an ordinary bank cage 1 or the like which has a window 2 therein. Adjacent to the wall of the cage 1, I dispose a box 3 which is provided with a top cover 4 hingedly secured to the box at 5, and with a side door 6 (see Figures 3 and 4). The box 3 has an L-shaped compartment 7 which is disposed adjacent to two sides of the box and which has disposed therein the electrically controlled actuating means hereafter described.

A compression tank 8 is disposed in the other compartment and contains a small portion of the liquid 9. The liquid 9 is of such composition as to cause the eyes of a person to water profusely when it is sprayed into the face of a victim, thus temporarily blinding the victim for a short time. The air in the tank 9 is placed under pressure which may be varied according to the different requirements to which the device is put. A compressed air tank or compressed air pump (not shown) may be brought into communication with the tank 8 so as to raise the air in the tank to the desired pressure. An outlet pipe 10 communicates with the tank 8 below the level of the liquid and is passed upwardly to the top of the cage 1 as is clearly shown in Figures 1 and 2. If desired, the pipe 10 may be branched as at 11 so as to provide a plurality of outlets to the device at any number of desired places. In the present form of the device, I have shown the pipe 10 branched at 11, the branches having their outlets disposed adjacent to the top of the cage 1 and at the sides of the window 2. It will be apparent that two pipes may be employed for each cage or that only a selected number of cages may have these pipes disposed therein. The main object is to provide enough outlets for the liquid so that the latter may be sprayed throughout all parts of the lobby 12. The ends of the pipes 10 are branched, as at 13, and are adapted to throw a spray 14 in a horizontal plane and a spray 15 in an inclined plane. The spray 15 is adapted to strike the face of the person standing in front of the window 2, and the spray 14 is adapted to spray the portions of the lobby further removed from the window 2.

The pipe 10 is provided with a valve 16

(see Figures 3 and 4), the valve in turn having an actuating handle 17. A spring 18 is secured to the free end of the handle 17 and is adapted to swing the valve from the full line position shown in Figure 4 to the dotted line position. As will be seen, the end of the valve normally engages the vertex of an angle iron 19 and thus is prevented from being moved downwardly by the spring 18. The angle iron 19 is pivoted at 20 and has a link 21 pivotally connected to its free end. The link 21 is in turn connected to a link 22 which has its free end pivotally secured to the box at 23. The full line position of the parts shown in Figure 3 illustrates the device when it is in normal position. The link 22 is prevented from swinging downwardly by means of a stop 24. From this construction it will be observed that the tendency of the spring actuated handle 19 is to swing the angle iron 19 downwardly and to also swing the links 21 and 22 downwardly. As heretofore stated, this downward movement is prevented by the stop 24 and the handle 17 is therefore held in the full line position shown in Figure 4. The links 21 and 22 are substantially in alinement with each other and thus act as a rigid rod which connects the free end of the angle iron 19 to the pivot point 23. It will be apparent that the greater the force exerted on the handle 17, the greater the tendency of the links 21 and 22 to remain in locked position. All of the force from the handle 17 is transmitted directly to the pivot point 23.

To release the handle 17 from the angle iron 19, I provide a lever 25 which is pivoted at 26 and which has one end thereof connected by means of a link 27 to the adjacent ends of the links 21 and 22. When the lever 25 is swung to the dotted line position, it will swing the links 21 and 22 upwardly and thus release the handle 17. An electrically controlled lever 28 is pivoted at 29 and normally engages with the free end of the lever 25. The free end of the lever 28 is adapted to be drawn into contact with a magnet 30 when the latter is energized. The magnet 30 is in electrical connection with a battery 31 and with a plurality of switches 32. These switches may be disposed in various places throughout the building which are easily accessible.

From the foregoing description of the various parts of the device, the operation thereof may be readily understood. When any one of the switches 32 is closed, the magnet 30 is energized and swings the lever 28 from the full line position to the dotted line position. This movement swings the lever 25 so that the latter will swing the links 21 and 22 upwardly to a point in which they are disposed out of alinement with respect to each other. The spring actuated handle 17 will now swing the angle iron to the dotted line position and will move the links 21, 22, and 27, and the lever 25 to the dotted line position. The valve 16 is now opened and the liquid which is under pressure is permitted to flow through the branches of the pipe 10 and out through the openings 33 and 34 of each branch. The openings 33 and 34 are provided with spraying nozzles (not shown) so that the liquid may be sprayed throughout a wide area. The pressure in the tank 8 is sufficient to force the spray to all portions of the lobby. It will thus be apparent that the liquid will come in contact with the faces of the persons standing in the lobby and will temporarily blind them as heretofore described. The person in the cage may now handcuff the intended robber, the person first putting on a gas mask or a pair of goggles so as not to be affected by the sprayed liquid. The spray may now be easily expelled from the room by merely opening the doors and windows, thus permitting the persons affected by the sprayed liquid to readily recover.

The device may be readily reset by swinging the links 21 and 22 back to the full line position and disposing the handle 17 on the angle iron 19. This closes the valve 16. The device may be instantly operated in the same manner as heretofore described by merely closing one of the switches 32. The door 6 is opened when it is necessary to reset the device, and the cover 4 is swung upwardly when it is desired to refill the tank 8 with the desired quantity of liquid.

From the foregoing it will be readily apparent that I have provided a simple and electrically controlled automatic means for instantly making the intended robber a helpless victim. It is obvious that one of these push buttons may be placed on the floor so that in case the person in the cage is required to hold up his hands, he may close the switch with his foot and thus automatically actuate the device. The device is simple in construction and is not likely to easily get out of order.

I claim:

1. In a device of the type described, a frame, a spring actuated handle, an angle iron having one end pivotally secured to said frame, a pair of links secured to each other, one of said links being secured to the free end of said angle iron, and the other link being secured to said frame, a stop for preventing the links from swinging in one direction, a lever secured to said frame, a third link connecting said lever with the adjacent ends of said first named links, and means for swinging said lever so as to swing said first named links away from said stop, said angle iron being adapted to prevent movement of said handle when said links abut said stop.

2. In a device of the type described, a frame, a spring actuated handle, an angle iron having one end pivotally secured to said frame, a pair of links secured to said frame, a pair of links secured to each other, one of said links being secured to the free end of said angle iron, and the other link being secured to said frame, a stop for preventing the links from swinging in one direction, a lever secured to said frame, a third link connecting said lever with the adjacent ends of said first named links, and means for swinging said lever so as to swing said first named links away from said stop, said angle iron being adapted to prevent movement of said handle when said links abut said stop, said means comprising an electrically actuated lever, said electrically controlled lever being adapted to actuate said first named lever.

3. A device of the character described comprising a tank for holding a liquid under pressure, a liquid outlet pipe communicating with said tank, a valve connected with said outlet pipe and conducting pipes connected with said valve for conveying liquid to points remote from said tank, a frame, a spring actuated handle for said valve, an angle iron having one end pivotally secured to said frame and arranged to normally lock said valve handle against movement in one direction, a pair of links pivotally secured to each other and adapted to normally lie in substantial alignment with each other, one of said links being secured to said frame, a stop for preventing the links from movement in one direction, a lever secured to said frame, a link connecting said lever with the adjacent ends of said first named links, and means for swinging said lever so as to swing said first named links away from said stop, whereby said angle iron may move to permit movement of said handle of said valve.

NATHANIEL R. GREEN.