(No Model.) 2 Sheets—Sheet 1.

P. FLOOD.

CAR STARTER.

No. 456,762. Patented July 28, 1891.

Fig. 1.

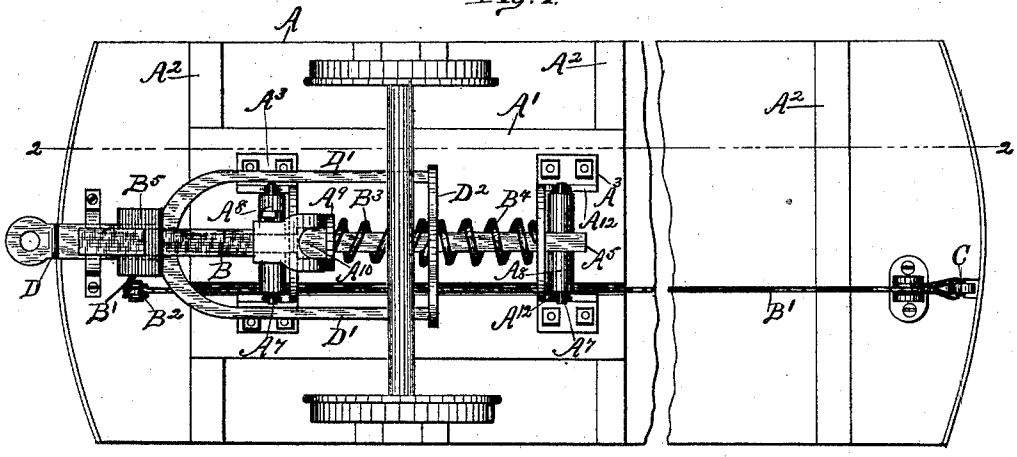

Fig. 2.

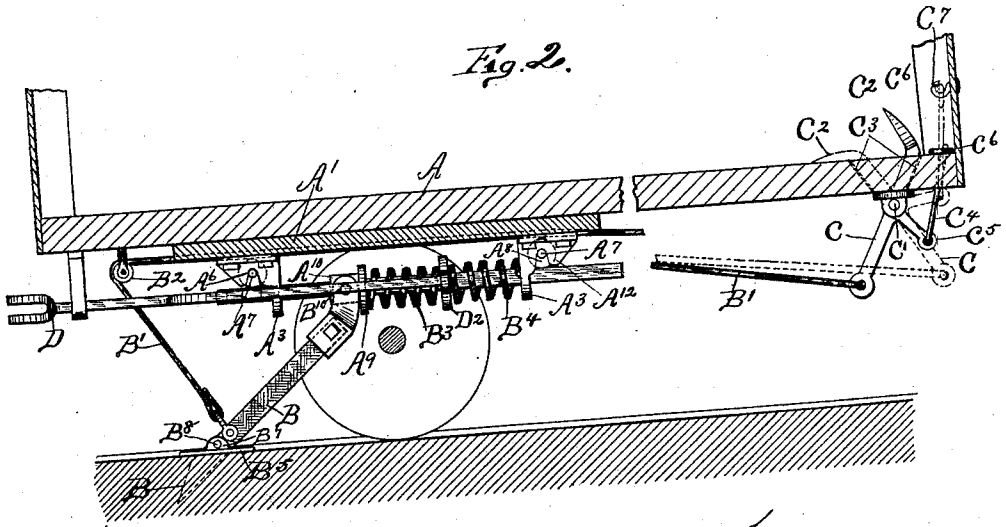

Witnesses:
Frank C. Curtis
Wm. H. Hollister Jr.

Inventor:
Patrick Flood
by Geo. A. Moore
Atty.

THE NORRIS PETERS CO., PHOTO-LITHO., WASHINGTON, D. C.

(No Model.)

2 Sheets—Sheet 2

P. FLOOD.

CAR STARTER.

No. 456,762. Patented July 28, 1891.

Fig. 3.

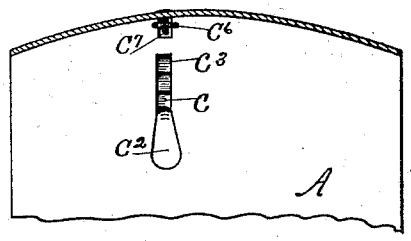

Fig. 4.

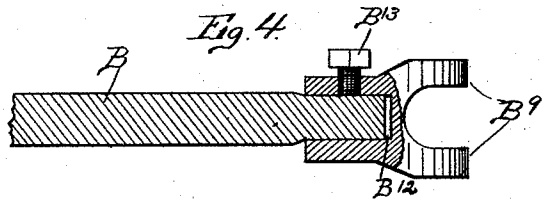

Fig. 5.

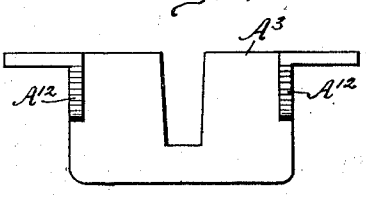

Fig. 6.

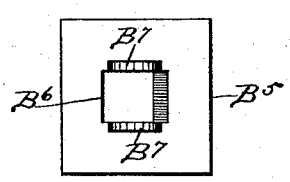

Witnesses:
Frank C. Curtis
Wm. H. Hollister Jr.

Inventor:
Patrick Flood
by Geo. A. Mosher
Atty.

THE NORRIS PETERS CO., PHOTO-LITHO., WASHINGTON, D. C.

UNITED STATES PATENT OFFICE.

PATRICK FLOOD, OF ALBANY, NEW YORK.

CAR-STARTER.

SPECIFICATION forming part of Letters Patent No. 456,762, dated July 28, 1891.

Application filed February 20, 1891. Serial No. 382,171. (No model.)

To all whom it may concern:

Be it known that I, PATRICK FLOOD, a citizen of the United States, residing at Albany, county of Albany, and State of New York, have invented certain new and useful Improvements in Car-Starters, of which the following is a specification.

My invention relates to such improvements; and it consists of the novel construction and combination of parts, hereinafter described and subsequently claimed.

Reference may be had to the accompanying drawings and the letters of reference marked thereon, which form a part of this specification.

Similar letters refer to similar parts in the several figures therein.

Figure 1 of the drawings is a bottom plan view of a street-railway car with my improved starter mechanism attached. Fig. 2 is a vertical longitudinal section of same, taken on the broken line 2 2 in Fig. 1. Fig. 3 is a top plan view of an end platform, showing foot-lever for lifting starter-dog. Fig. 4 is a central longitudinal section of a portion of the starter-dog shank and its supporting-socket. Fig. 5 is a view in front elevation of one of the castings having the roller and slide-rod bearings. Fig. 6 is a top plan view of a stop-plate for the starter-dog.

To the bottom of car A, I attach a bed-plate A′, preferably fastened to the cross-beams A^2. To the bed-plate near its rear and forward ends I attach the castings A^3, which castings contain the bearings or slideways A^4 for the slide-bar A^5, and the bearings A^6 for the journals A^7 of rollers A^8. The slide-bar bears upon the rollers and is movable longitudinally thereon. The starter-dog B is pivoted at its upper end upon the slide-rod and tapered at its lower end to engage with the ground or pavement. The swinging end of the dog is connected by cable B′, running over pulley B^2, fixed to the bottom of the car with the foot-lever C on the front platform, by means of which the driver is able to lift the dog from engagement with the ground by means of his foot. Inclosing the slide-bar are the coil-springs B^3 and B^4, which, acting as a single spring, bearing at one end upon casting A^3 and at the other end upon collar A^9, tend to force the slide-rod backward or the car forward when the dog is in engagement with the ground. The mechanism thus described in function and operation is similar to that shown and described in Letters Patent No. 415,835, issued to me November 26, 1889. Since applying for such patent I have ascertained that when the ground is soft the tapered end of the dog will be forced into the ground too easily, and I provide the same with a stop-plate B^5, having a central aperture B^6, adapted to loosely receive the dog, and the ears B^7, through which the pivot B^8 is inserted passing through an aperture formed in the dog at the desired distance from the tapered end, whereby the dog is prevented from entering the ground beyond a certain depth. The plate thus pivoted upon the dog is free to change its angular position relatively to the dog to conform to the surface of the ground. I have also ascertained that by attaching the forward end of the cable B′ to the lower end of a foot-lever pivoted upon the bottom of the car-platform and projecting the upper end of the lever to which foot-rest C^2 is attached obliquely up through a mortise C^3 in the floor of the platform the foot-rest and lever can be pushed down upon the floor of the platform in a position to be out of the way and leave the platform free and clear of all obstructions. The position of the foot-lever when thus pushed down upon the platform-floor is indicated by the dotted lines in Fig. 2. After the lever has been thus pushed down by the foot and the dog lifted thereby, the parts may be retained in such position, which is that indicated by the dotted lines, by means of the link C^4, pivoted to the short arm C^5, secured to or forming a part of the the main lever C, the upper end of the link being provided with an eye C^6, adapted to be supported by the hook C^7, as indicated by dotted lines and solid lines in Fig. 2.

It frequently happens that it is desirable to connect two or more street-cars together—as, for example, when the common car is towed by an electric-motor car. I therefore provide a draw-bar D, which is connected by the arms D′ and connecting cross-bar D^2 with the slide-bar A^5, the cross-bar D^2 being provided with an aperture adapted to receive the slide-bar, longitudinally of which the cross-bar is

free to slide. The cross-bar D^2 is so located on the slide-bar that one end of the spring B^4 bears upon one side of the cross-bar, while the other end of such spring bears upon the casting A^3, and one end of the spring B^3 bears upon the opposite side of the cross-bar and the other end of such spring bears upon the collar A^9. The rearward movement of the slide-bar is limited by the enlargement A^{10}, when it engages with the rear casting A^3. It will thus be seen that a rearward movement of the draw-bar, such as would be induced by drawing another car, would be resisted by the resilient force of spring B^3, while the forward movement of the draw-bar, such as would be induced by pushing another car, would be resisted by the resilient force of spring B^4 bearing against the forward casting. It is likewise apparent from an inspection of Fig. 2 that the starter-dog when in use acts upon and utilizes both springs B^3 and B^4. When starting a car from the position shown in Fig. 2, the resilient force of the springs acting upon the dog balances the car, so that the force required to start the car up the grade would be no greater than would be required to start the car on a level. I am thus able to utilize the same set of springs to assist in starting the car and to control the movements of the draw-bar, which is of no little importance in electric-railway cars, in which very little available space is left beneath the trucks after providing room for the motor. By providing the ears A^{12} of the casting A^3 with open bearings, opening downward, for the roller-journals A^7, and the bridge part of the casting with the open bearing, opening upward, for the slide-bar, I am able to cast the parts complete and provide them with all necessary apertures, thus saving the expense of drilling and fitting up the castings.

I prefer to make the starter-dog in two parts, the upper end consisting of a malleable casting comprising the ears B^9, adapted to receive the pivot B^{10}, by which they are secured to the slide-bar, and the socket B^{12}, adapted to receive the upper end of the shank of the dog. The shank is secured in the socket by means of the set-screw B^{13}, as shown in Fig. 4. I am thus able to provide a means for cheaply and conveniently attaching the dog to the slide-bar and for changing the shank or point of the dog in case of breakage without disconnecting the ears from the slide-bar.

What I claim as new, and desire to secure by Letters Patent, is—

1. In a street-car, the combination, with a spring-controlled slide-bar, of a starter-dog pivotally secured to such bar, means for swinging such dog to and from engagement with the ground, and a draw-bar movably connected with the slide-bar and controlled in its movements by the slide-bar-controlling springs, substantially as described.

2. The combination, with a malleable cast-iron socket pivoted upon a spring-controlled slide-bar, of a detachable starter-dog shank and point, substantially as described.

3. The combination, with a spring-controlled slide-bar and starter-dog pivoted upon such bar, of bar-supporting rollers and a pair of castings cast with open roller-journal bearings opening downward and an open slide-bar bearing opening upward, substantially as described.

4. The combination, with a car-platform mortised to receive a foot-lever, of a foot-lever pivoted to the under side of the platform and projecting through such mortise, and a foot-rest projecting obliquely from the upper end of the lever, substantially as described.

In testimony whereof I have hereunto set my hand this 5th day of February, 1891.

PATRICK FLOOD.

Witnesses:
FRANK C. CURTIS,
CHAS. L. ALDEN.