Office de la Propriété Intellectuelle du Canada
Un organisme d'Industrie Canada

Canadian Intellectual Property Office
An agency of Industry Canada

CA 2433433 C 2005/06/28

(11)(21) 2 433 433

(12) BREVET CANADIEN
CANADIAN PATENT

(13) C

(22) Date de dépôt/Filing Date: 2003/07/10

(41) Mise à la disp. pub./Open to Public Insp.: 2004/03/21

(45) Date de délivrance/Issue Date: 2005/06/28

(30) Priorité/Priority: 2002/11/11 (2002-361457) JP

(51) Cl.Int.^{7}/Int.Cl.^{7} F02B 75/02

(72) Inventeur/Inventor:
HU, LUNG TAN, CA

(73) Propriétaire/Owner:
HU, LUNG TAN, CA

(74) Agent: GOUDREAU GAGE DUBUC

(54) Titre : MOTEUR A COMBUSTION INTERNE A HUIT TEMPS UTILISANT UN CYLINDRE RECEPTEUR
(54) Title: EIGHT-STROKE INTERNAL COMBUSTION ENGINE UTILIZING A SLAVE CYLINDER

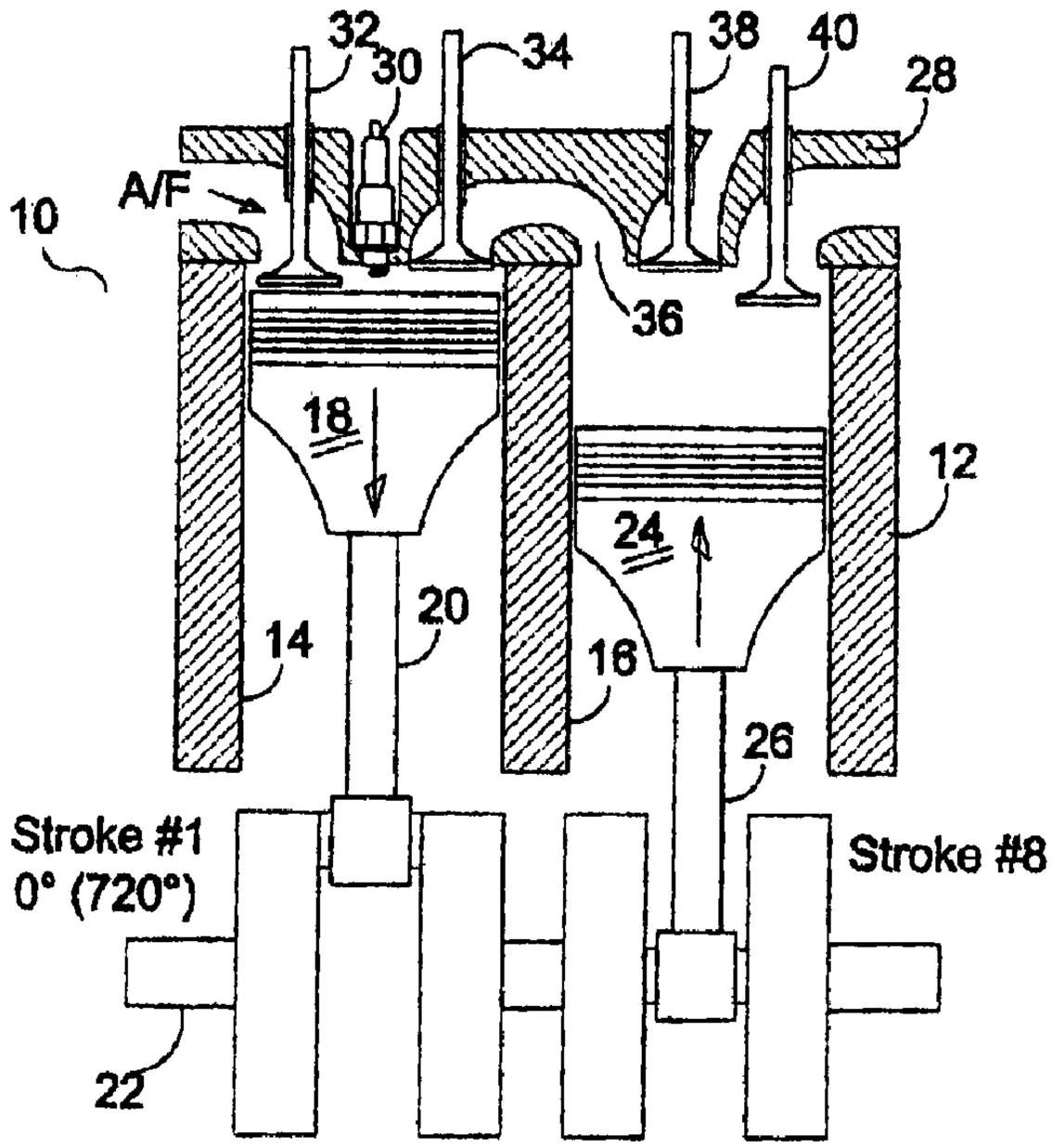

(57) Abrégé/Abstract:
By utilizing a slave cylinder working in coordination with a master cylinder, the slave cylinder both receives cool atmospheric air and receives hot, partially un-burnt exhaust gases from the master cylinder to create a second power-stroke in the slave cylinder. With the two coordinating cylinders, the entire working process is from 0 to 810 degrees of revolution crankshaft. The master cylinder cycles work from 0 to 720 degrees of revolution and slave cylinder cycles work from 90 to 810 degrees of revolution. The master cylinder begins to intake air and fuel at 0 degree of revolution and slave cylinder begins to intake air at 90 degrees of revolution. There is an angle of 60 -120 degrees difference between master and slave cylinder, where the slave cylinder is trailing the master.

ABSTRACT

By utilizing a slave cylinder working in coordination with a master cylinder, the slave cylinder both receives cool atmospheric air and receives hot, partially unburnt exhaust gases from the master cylinder to create a second power-stroke in the slave cylinder. With the two coordinating cylinders, the entire working process is from 0 to 810 degrees of revolution crankshaft. The master cylinder cycles work from 0 to 720 degrees of revolution and slave cylinder cycles work from 90 to 810 degrees of revolution. The master cylinder begins to intake air and fuel at 0 degree of revolution and slave cylinder begins to intake air at 90 degrees of revolution. There is an angle of 60 -120 degrees difference between master and slave cylinder, where the slave cylinder is trailing the master.

FIELD

The present invention is related to an eight-stroke internal combustion engine, which may be used in most any application of present uses of internal combustion engines, such as a transportation vehicle. More specifically this invention relates to an eight-stroke reciprocating piston driven internal combustion engine utilizing a slave cylinder working in cooperation with a master cylinder.

BACKGROUND OF THE INVENTION

There are two main types of piston driven reciprocal internal combustion engines, they are the spark ignition engines, and the auto-ignition engines, also called diesel engines.

These piston driven reciprocal engines, for the most part, use either a two-stroke cycle or more commonly, a four-stroke cycle. The main parts of these engines are a cylinder containing a piston with a reciprocal movement which is converted into a rotational movement by means of a connecting rod and a crankshaft, and a cylinder head consisting of at least two valves, one exhaust valve and one intake valve. The four stroke or four cycle engine begins by the piston drawing an atomized air-fuel mixture into the cylinder through the intake valve on the first down stroke, the first cycle; then with the valves closed the mixed gases are compressed on the first up stroke, the second cycle; and at or near the top of the first up stroke, the compressed mixture of air and fuel ignites, by either a spark or by auto-ignition, and the mixture, or most of the gas mixture, combusts to produce a second downward stroke the third cycle, which is the power stroke; the second upward stroke, the fourth cycle, pushes the burnt gas mixture and the remaining un-burned gas mixture out of an open exhaust valve to complete the fourth cycle where the rotary or centrifugal motion created by the process is carried by the flywheel for the cycles to continue until either the fuel is shut off or 18 the spark is discontinued.

The efficiency of the energy produced depends, among other variables, on the amount of air-fuel mixture drawn or forced into the cylinder and the compression volume ratio. The higher the compression volume ratio, the higher the efficiency. The compression volume ratio is limited, in the case of the gasoline engine, by the risk of premature ignition of the mixture and in the case of the diesel engine among other variables, by a sturdy and appropriate combustion chamber.

It is well known that four-cycle and other multi-cycle internal combustion engines produce exhaust gases that contain un-used energy in the form of un-burnt gasses. Many different approaches have been used to both try to capture the un-used energy within these unburned gases and to try to reduce atmospheric emissions caused by inefficient combustion.

Inventor is aware of United States Patent 4,917,054 issued to Schmitz on April 17, 1990, "Six-stroke internal combustion engine". This is a reciprocating pistons engine, wherein six strokes are used, which are the admission of air, the first compression accompanied or followed by a possible cooling, a second compression followed by a combustion, the first expansion producing a usable work, the second expansion producing usable work and finally the discharge of the combustion gases.

SUMMARY OF THE INVENTION

It is therefore an object of the present invention is to produce an eight-stroke reciprocating piston internal combustion engine with increased fuel efficiency.

Another object of the present invention, is to produce an eight-stroke reciprocating piston internal combustion engine which is less polluting.

By the use of a slave cylinder working in coordination with a master cylinder, the slave cylinder both receives cool atmospheric air and receives hot combustion gases from the master cylinder to create a second power-stroke in the slave cylinder. The increased compression ratio of air in the slave cylinder, allows compressed air to be injected into the master cylinder as the master cylinder is in the later half of it's power stroke, this causes a re-bum of the combustion gasses in the master cylinder. This secondary combustion is transferred from the master cylinder, through the coordinate valve to the slave cylinder to produce a second power stroke within the slave cylinder.

The lower temperature in the slave cylinder makes it possible, by heat transfer, to substantially take full advantage of the heat energy created in the master cylinder.

With the two coordinating cylinders, the master cylinder and the slave cylinder, there are eight working cycles or strokes, each within 90° of crankshaft revolution of each other. The entire working process is from 0° to 810° of revolution crankshaft. The master cylinder cycles work from 0° to 720° of revolution and slave cylinder cycles work from 90° to 810° of revolution. The master cylinder begins to intake air and fuel at 0 degree of revolution and slave cylinder begins to intake air at 90° of revolution.

In a conventional internal combustion engine, the engine metal will absorb the heat energy produced by combustion, and the cylinder will be cooled down by the cooling system. Resulting in wasted heat energy. The eight-stroke piston engine uses cold air in the slave cylinder to combine with the "wasted" heat energy to produce power as when the cool air combines with the heat energy and un-burnt gases, the cool air inside the slave cylinder will expand. Therefore, the expanded air will continue the power cycle within the master cylinder by combusting most of the remaining un-burnt gases and as the master cylinder exhaust, it also produces a second power cycle within the slave cylinder without a spark.

The heat energy and un-burnt gases from the master cylinder will combine with the cool air in the slave cylinder. This will reduce the temperature in the master cylinder lowering the chance of pre-ignition detonation, thus allowing higher compression ratios and will also result in higher thermal efficiency, as the cooler slave cylinder air absorbs the heat energy and the engine metal will absorb less heat.

Therefore, the embodiment of this invention is an internal combustion engine composed essentially of at least one pair of compressing cylinders. It is plausible that the master cylinder and the slave cylinder could be substantially more or substantially less than 90° off rotation of each other. For ease of explaining this

invention the cylinders are discussed herein working 90° off rotation of each other.

It is also plausible that the master cylinder could potentially use a third valve, an exhaust valve to the outside if required. As well it is plausible that the slave cylinder could potentially use a third valve giving more control to the coordinate valve port if required. It is also plausible, the displacement of the master cylinder and slave cylinder could be different. As well, the duration of the valve timing may be varied depending on the application requirements and variables in the engine tuning dynamics. It is further plausible wherein this engine has more than one said slave cylinder for each said master cylinder, or more than one master cylinder for each slave cylinder. It is still further plausible wherein this engine's second power stroke is assisted by introduction of a light fuel such as hydrogen.

In theory, the principle of this eight-stroke internal combustion engine can be applied to both the spark ignition engine and the auto-ignition or diesel engine, and the invention could plausibly use a spark in the slave cylinder if so desired.

BREIF DESCRIPTION OF THE DRAWINGS

Various other objects, features and advantages of the present invention will become more fully appreciated as the same becomes better understood when considered in conjunction with the following detailed description of an illustrative embodiment and the accompanying drawings, in which like reference characters designate the same or similar parts throughout the several views, and wherein;

FIGS. 1 to 8 are progressive engine strokes from one to eight shown in a sectional elevation view of the engine,

FIG. 1 shows the master cylinder intake, stroke #1, at beginning of the stroke and

the slave cylinder is in the middle of its exhaust, stroke #8.

FIG. 2 shows the master cylinder intake, stroke #1, at the middle of the stroke and the slave cylinder is finishing its exhaust, stroke #8.

FIG. 3 shows the master cylinder compression, stroke #3, at the beginning of the stroke and the slave cylinder is in the middle of intake, stroke #2.

FIG. 4 shows master cylinder compression, stroke #3, at the middle of the stroke and the slave cylinder is in the end of intake, stroke #2.

FIG. 5 shows master cylinder ignition, stroke #5, at the beginning of the power stroke and the slave cylinder is in the middle of compression, stroke #4.

FIG. 6 shows master cylinder combustion, stroke #5, at the middle of the power stroke and the slave cylinder is at the top of compression, stroke #.

FIG. 7 shows master cylinder exhaust, stroke #7, at the beginning of the exhaust stroke and the slave cylinder is in the middle of the power stroke, stroke #6.

FIG. 8 shows master cylinder exhaust, stroke #7, at the middle of the exhaust stroke and the slave cylinder is at the end of the power stroke, stroke #6.

FIG. 9 shows a diagram of the eight-stroke engine working cycles.

DESCRIPTION OF THE PREFERRED EMBODIMENTS

The eight-stroke internal combustion engine is generally referred to as 10, it is shown in a cutaway sectional elevation view, where engine 10 comprises a

cylinder block 12, and within block 12, there is a master cylinder bore 14 and a slave cylinder bore 16.

The master cylinder 14 contains a piston 18 which is slidable movable by connecting rod assembly 20, rod 20 is rotationally supported by crankshaft 22, where crankshaft 22 is rotationally supported by cylinder block 12. Slave cylinder bore 16 contains a piston 24 which is slidable movable by connecting rod assembly 26, rod 26 is also rotationally supported by crankshaft 22.

Fixed atop cylinder block 12 is a cylinder head 28. Above master cylinder 14, cylinder head 28 includes a spark plug 30, an intake valve 32 and a coordinate valve 34. Above slave cylinder 16, cylinder head 22 includes an open port 36 to coordinate valve 34, an intake valve 38 and an exhaust valve 40.

As seen in FIG. 1, intake stroke, stroke #1, is at the beginning (0°) of the crankshaft 22 rotation cycle. During rotation, master cylinder 14 intakes air and fuel (A/F) through the master cylinder intake valve 32. At this rotational position the slave cylinder piston 24, is in the middle of its exhaust stroke, stroke #8.

As seen in FIG. 2, intake, stroke #1, is at the middle (90°) of rotation, where the master cylinder 14 intakes A/F through the master cylinder intake valve 32 and slave cylinder 16 is finishing its exhaust stroke, stroke #8 (810° of its cycle rotation completion, or the beginning of a new cycle of rotation).

As seen in FIG. 3 the master cylinder 14 compression, stroke #3, at the beginning of the stroke (180° of its cycle rotation), where the master cylinder 14 begins compresses A/F and the slave cylinder piston 24 is in the middle of intake, stroke #2, induction of Air only.

As seen in FIG. 4 master cylinder 14 compression stroke #3, at the middle of the stroke (270° of its cycle rotation), where the master cylinder piston 18 continues

compression of A/F and the slave cylinder 16 is in the end of intake, stroke #2.

As seen in FIG. 5 shows master cylinder 14, upon sparkplug 30 ignition, stroke #5, at the beginning of the power stroke (360° of cycle rotation), where the master cylinder 14 begins combustion of A/F and the slave cylinder piston 24 is in the middle of compression, stroke #4, where the slave cylinder compresses Air only.

As seen in FIG. 6 master cylinder combustion, stroke #5, at the middle of the power stroke (450° of cycle rotation), where the master cylinder's coordinate valve 34 is already opening (the air from slave cylinder is pushed into master cylinder at about 420 degrees, close to the end of Stroke #4) and the slave cylinder piston 24 is at the top of compression, stroke #4 where the slave cylinder's compressed Air is mixed with combustion gases in master cylinder 14.

As seen in FIG. 7 master cylinder 14 exhaust, stroke #7, at the beginning of the exhaust stroke (540° of cycle rotation), where the master cylinder 14 begins to exhaust combustion gases through the coordinate valve and the slave cylinder piston 24 is in the middle of the power stroke, stroke #6, where the slave cylinder 16 continues power stroke as the gases expand and are re-burned within both master cylinder 14 as it exhausts through coordinate valve and into slave cylinder 16 as slave cylinder piston 24 continues its power stroke.

As seen in FIG. 8 where in master cylinder 14, the master cylinder piston 18 is at the middle of the exhaust stroke, stroke #7, (630° of cycle rotation), where the master cylinder piston 18 continues to exhaust combustion gases through the coordinate valve 34 and the slave cylinder 16 is at the end of the power stroke, stroke #6, where the slave cylinder continues to accept the combustion gases from the master cylinder through coordinate valve 34 until coordinate valve 34 closes before the next intake cycle begins.

As seen in FIG. 9 a diagram showing the eight-stroke engine working cycles.

As will be apparent to those skilled in the art in the light of the foregoing disclosure, many alterations and modifications are possible in the practice of this invention without departing from the spirit or scope thereof. Accordingly, the scope of the invention is to be construed in accordance with the substance defined by the following claims.

What is claimed is:

2

1. An eight-stroke internal combustion engine (10) comprising:

4 at least one master cylinder (14) including a master reciprocating piston (18) connected to a crankshaft (22);

6 at least one slave cylinder (16) including a reciprocating slave piston (24) connected to said crankshaft (22), wherein when a rotation of said crankshaft (22) 8 is at approximately 450 degree of cycle revolution, all compressed air in said at least one slave cylinder (16) is pushed into said at least one master cylinder (14);

10 at least one first valve (32) associated with said at least one master cylinder (14) for admission of air and fuel mixture into said at least one master cylinder (14);

12 at least one second valve (38) associated with said at least one slave cylinder (16) for admission of air into said at least one slave cylinder (16);

14 at least one third valve (40) associated with said at least one slave cylinder (16) for discharge of exhaust gases from said at least one slave cylinder (16); and

16 at least one coordinate valve (34) for regulating gases between said at least one master cylinder (14) and said at least one slave cylinder (16), wherein said at 18 least one master cylinder (14) and said at least one slave cylinder (16) are operating approximately 90 degrees apart from said at least one master cylinder 20 (14) leading said at least one slave cylinder (16).

22 2. An eight-stroke internal combustion engine (10) comprising:

strokes #1 (1), #2 (2), #3 (3), #4 (4), #5 (5), #6 (6), #7 (7), and #8 (8); said 24 strokes #1 (1), #3 (3), #5 (5), and #7 (7) being associated with a master cylinder (14); said strokes #2 (2), #4 (4), #6 (6) and #8 (8) being associated with a slave 26 cylinder (16);

a crankshaft (22) having a working cycle from 0 to 720 degrees of 28 crankshaft rotation; said slave cylinder (16) having a cycle from 90 to 810 degrees of crankshaft rotation;

30 a reciprocating master piston (18) residing within said master cylinder (14);

a reciprocating slave piston (24) residing within said slave cylinder (16) and 32 tailing said master piston (18) 90 degrees of crankshaft rotation;

degrees of crankshaft rotation (Stroke #7) with master piston (18) moving away from said crankshaft (22); and

a slave cylinder exhaust valve (40) associated with said slave cylinder (16) for discharge of exhaust from said slave cylinder (16) during 630 to 810 degrees of crankshaft rotation (Stroke #8) with said slave piston (24) moving away from said crankshaft (22).

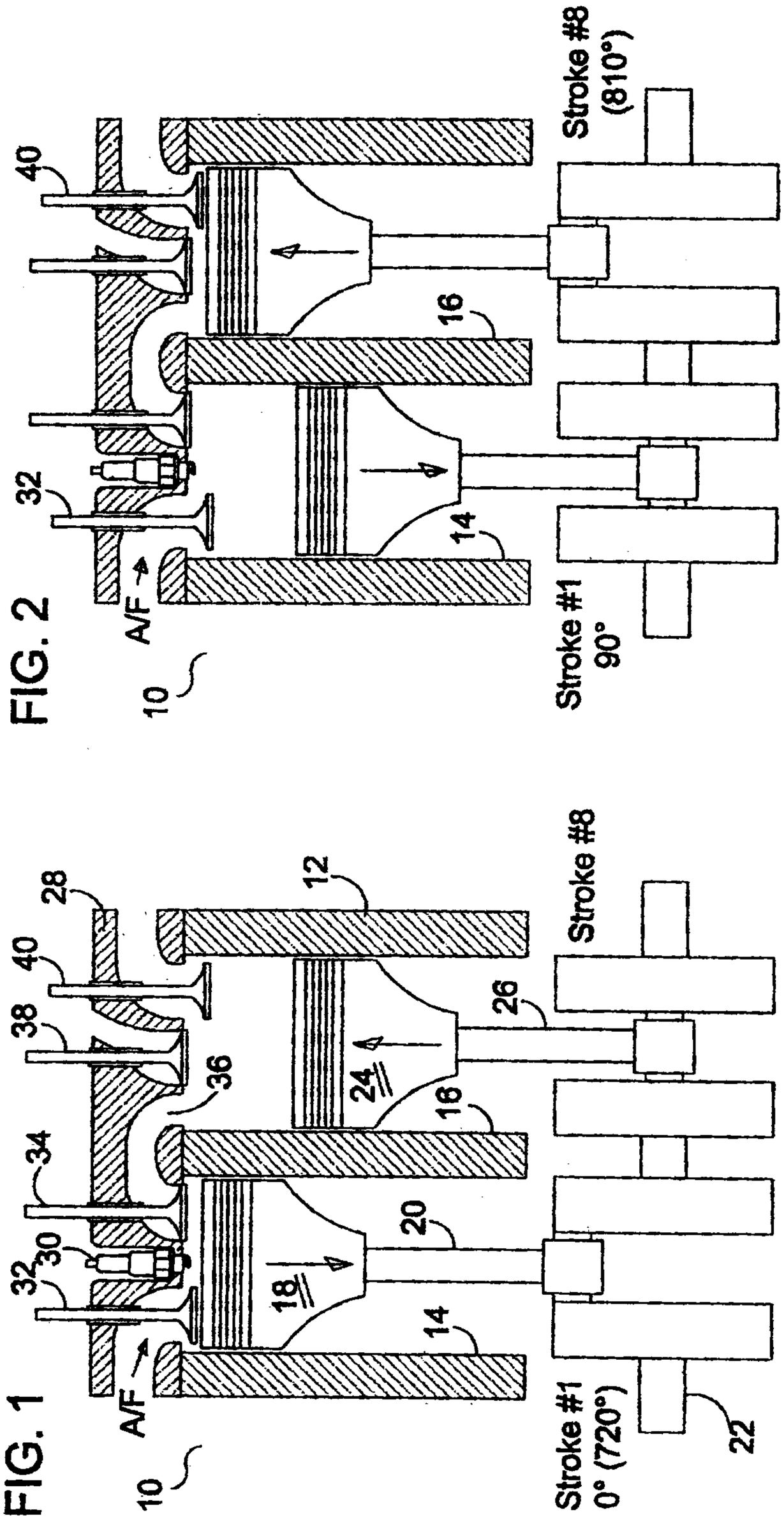
Stroke #8
(810°)
40
16
32
14
A/F
10
Stroke #1
90°
FIG. 2
28
12
Stroke #8
40
38
26
36
24
34
18
20
32
30
18
14
A/F
10
Stroke #1
0° (720°)
22
FIG. 1

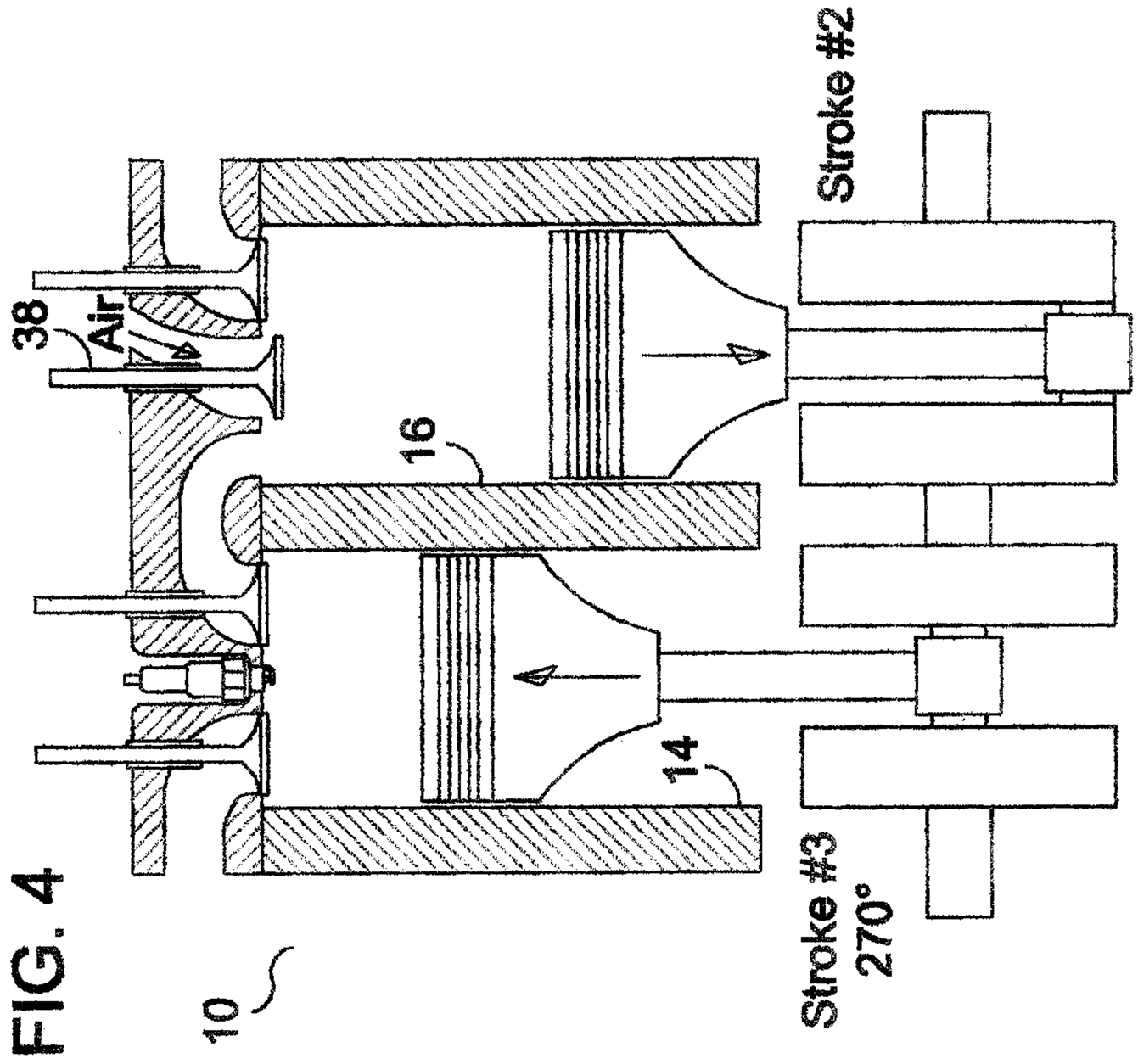
38
Air
16
14
10
Stroke #2
Stroke #3
270°

FIG. 4

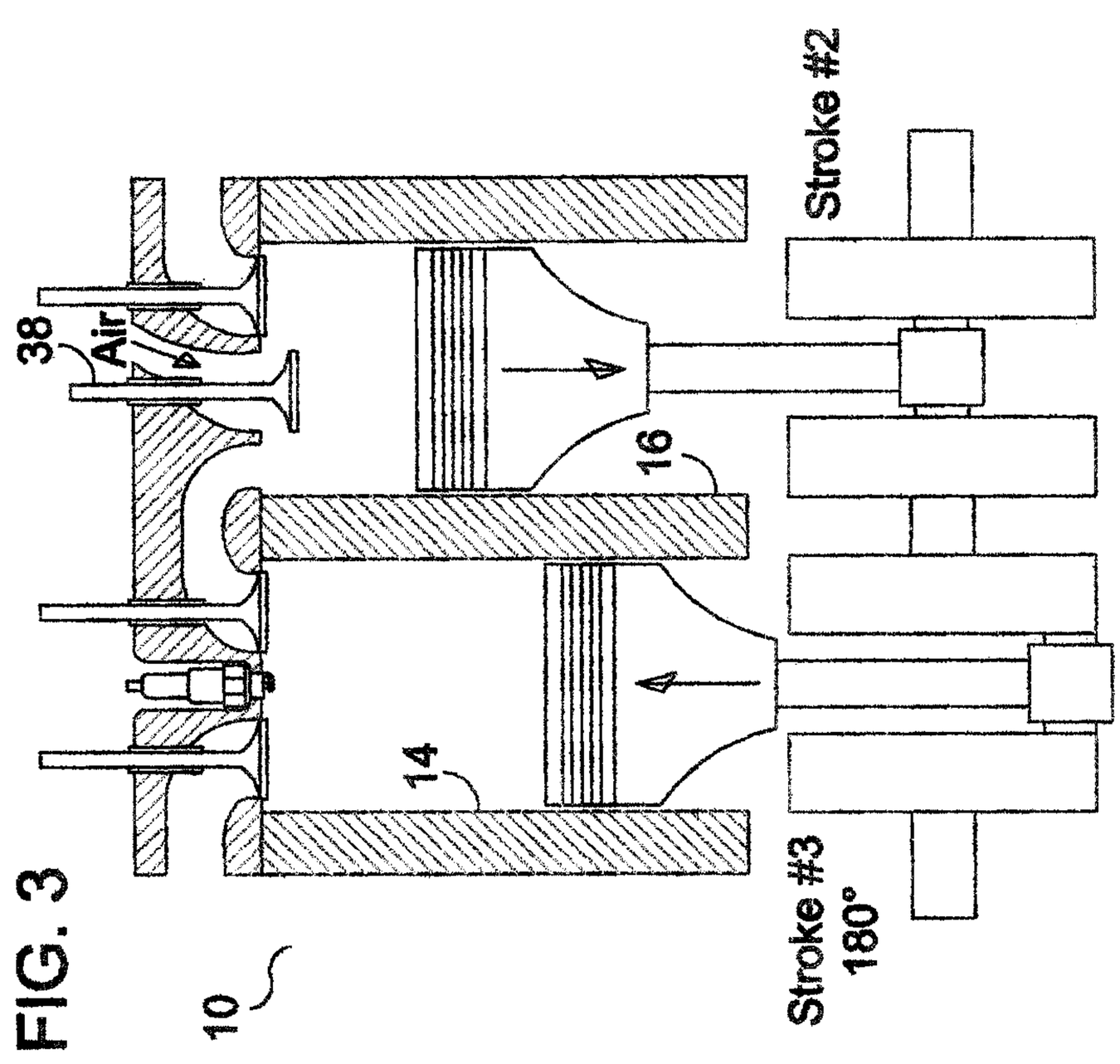
38
Air
16
14
10
Stroke #2
Stroke #3
180°

FIG. 3

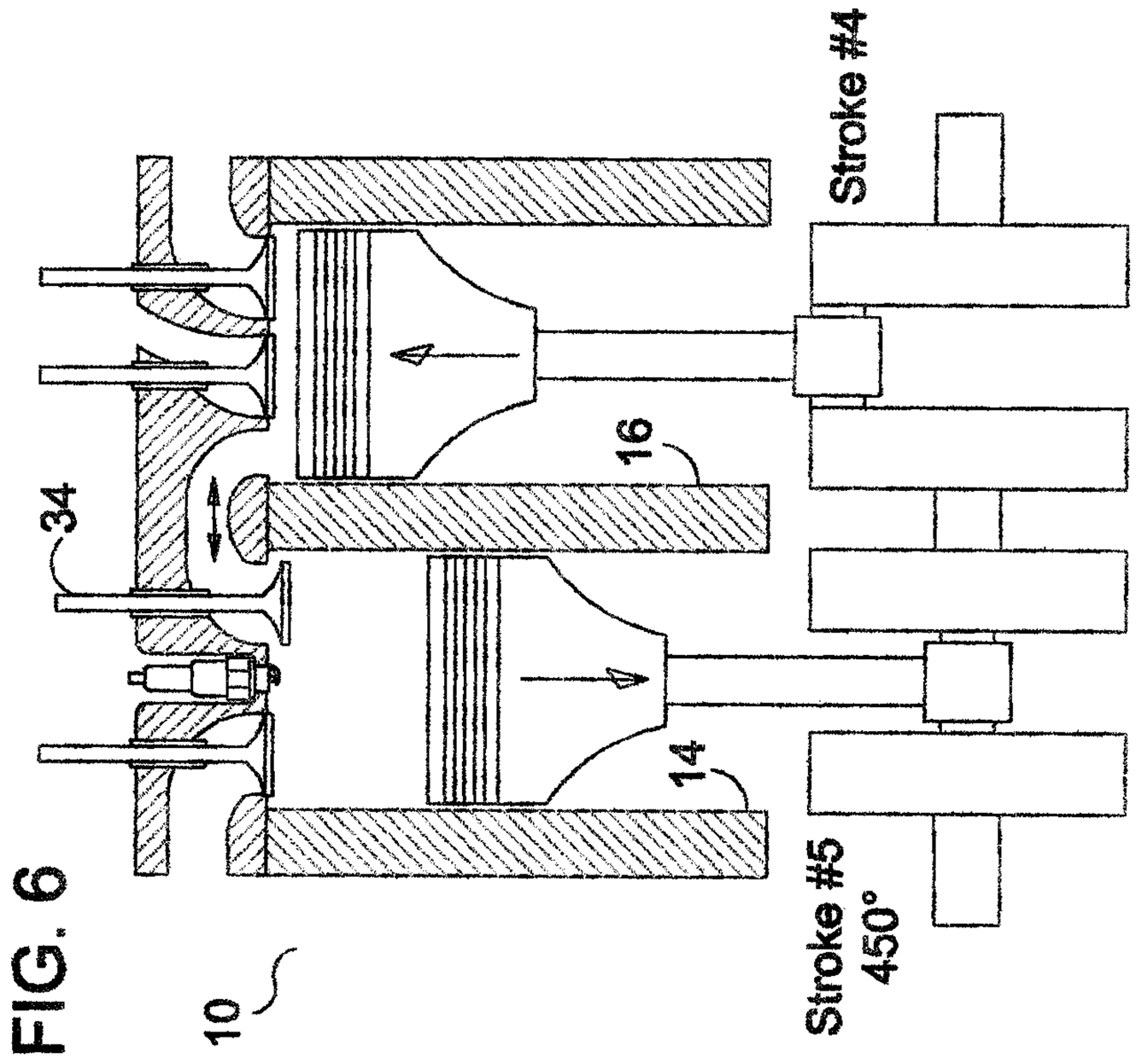
Stroke #4
16
34
14
Stroke #5
450°
10

FIG. 6

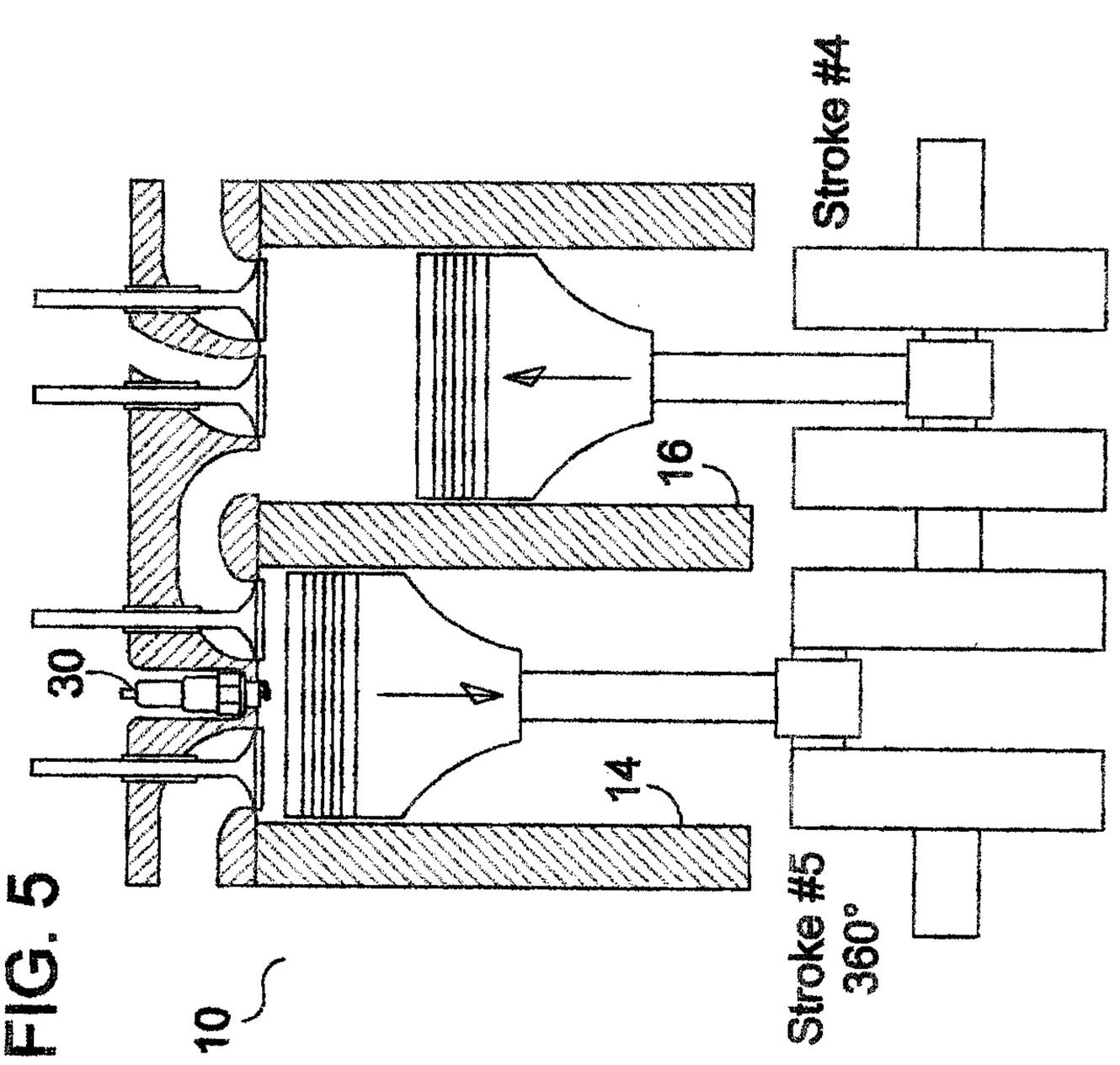
Stroke #4
16
30
14
Stroke #5
360°
10

FIG. 5

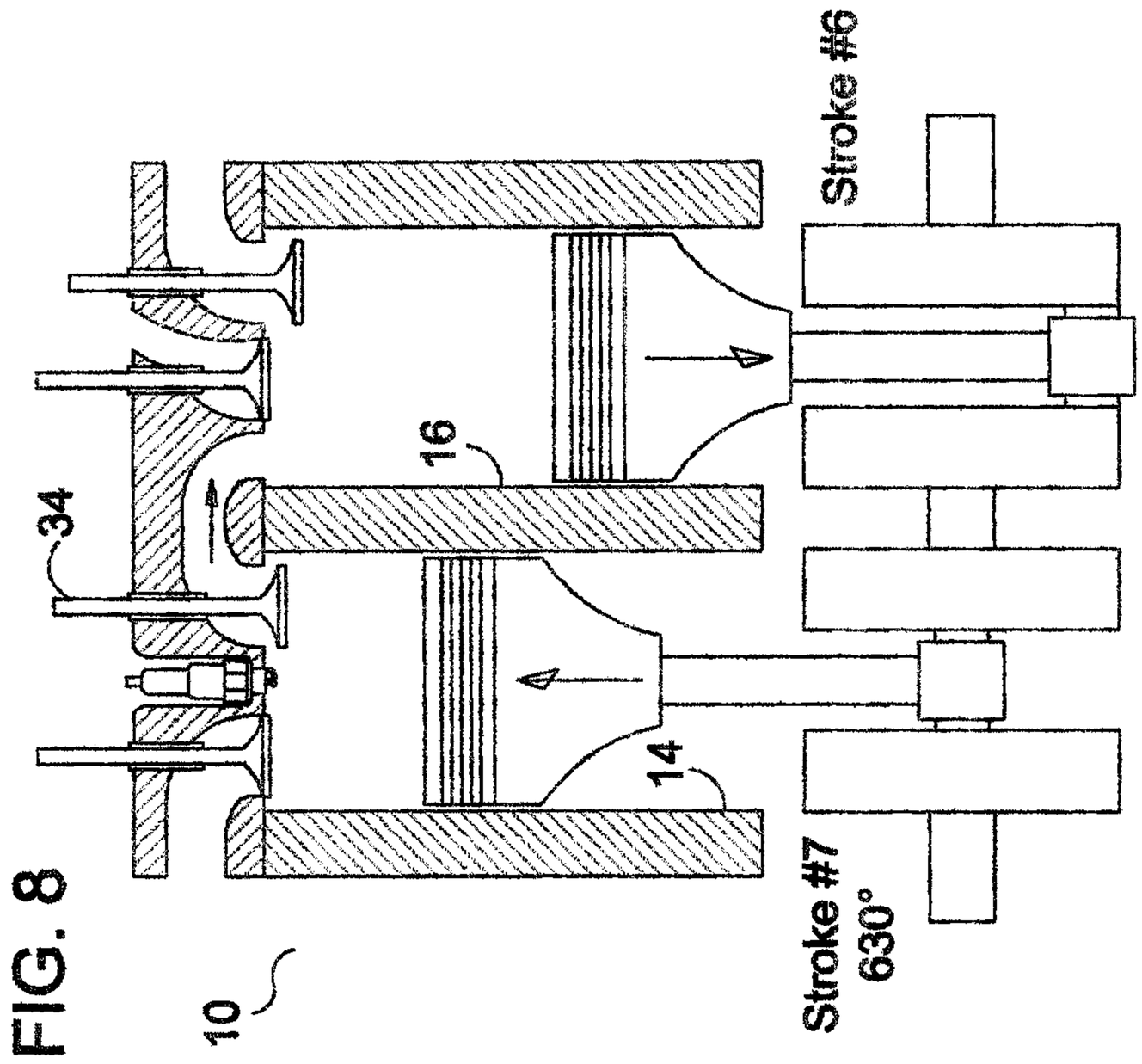
Stroke #6
16
34
14
Stroke #7
630°
10

FIG. 8

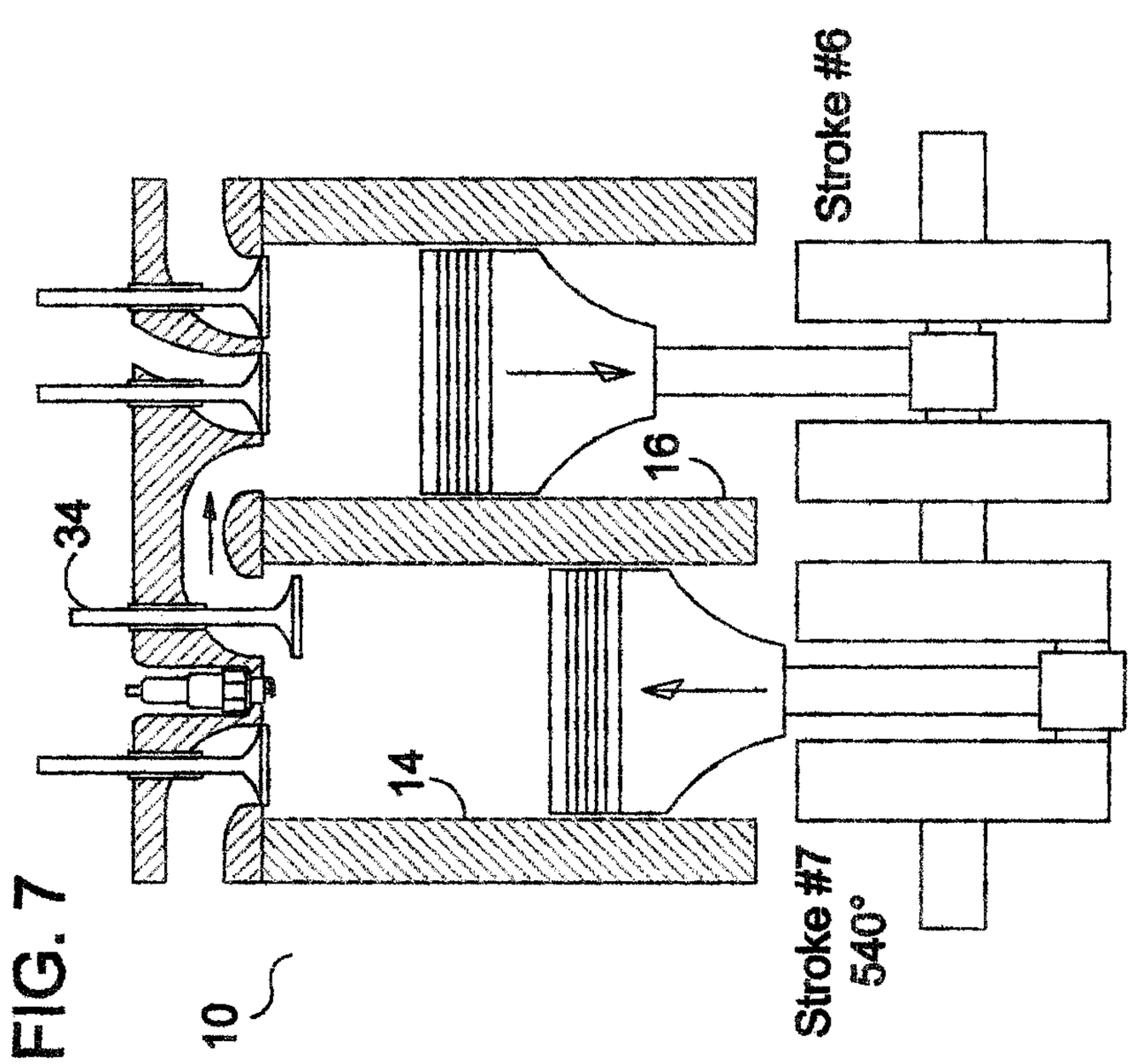
Stroke #6
16
34
14
Stroke #7
540°
10

FIG. 7

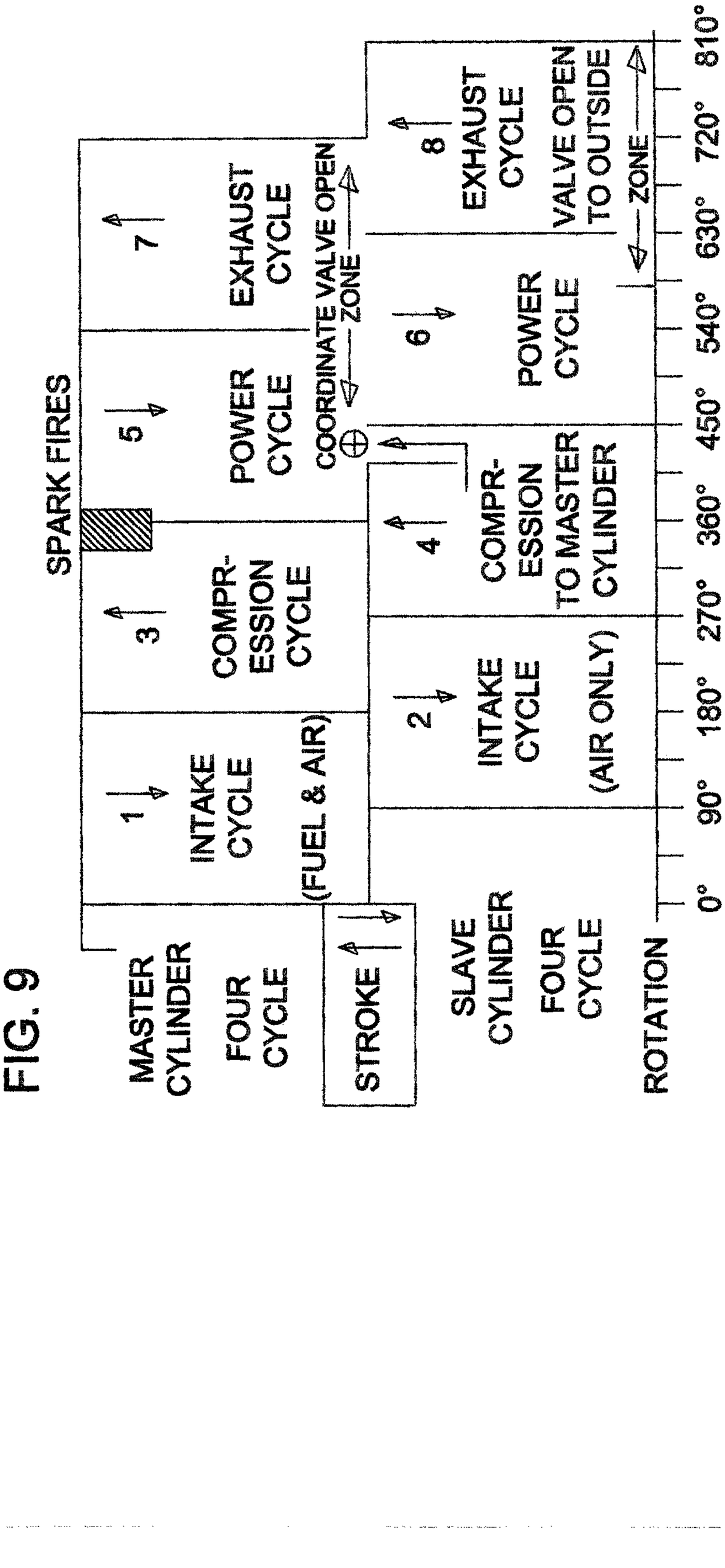
MASTER CYLINDER
FOUR CYCLE
STROKE
SLAVE CYLINDER
FOUR CYCLE
ROTATION
0°
90°
180°
270°
360°
450°
540°
630°
720°
810°
1
INTAKE CYCLE
(FUEL & AIR)
2
INTAKE CYCLE
(AIR ONLY)
3
COMPR-ESSION CYCLE
4
COMPR-ESSION
TO MASTER CYLINDER
SPARK FIRES
5
POWER CYCLE
6
POWER CYCLE
COORDINATE VALVE OPEN ZONE
7
EXHAUST CYCLE
8
EXHAUST CYCLE
VALVE OPEN TO OUTSIDE
ZONE

FIG. 9

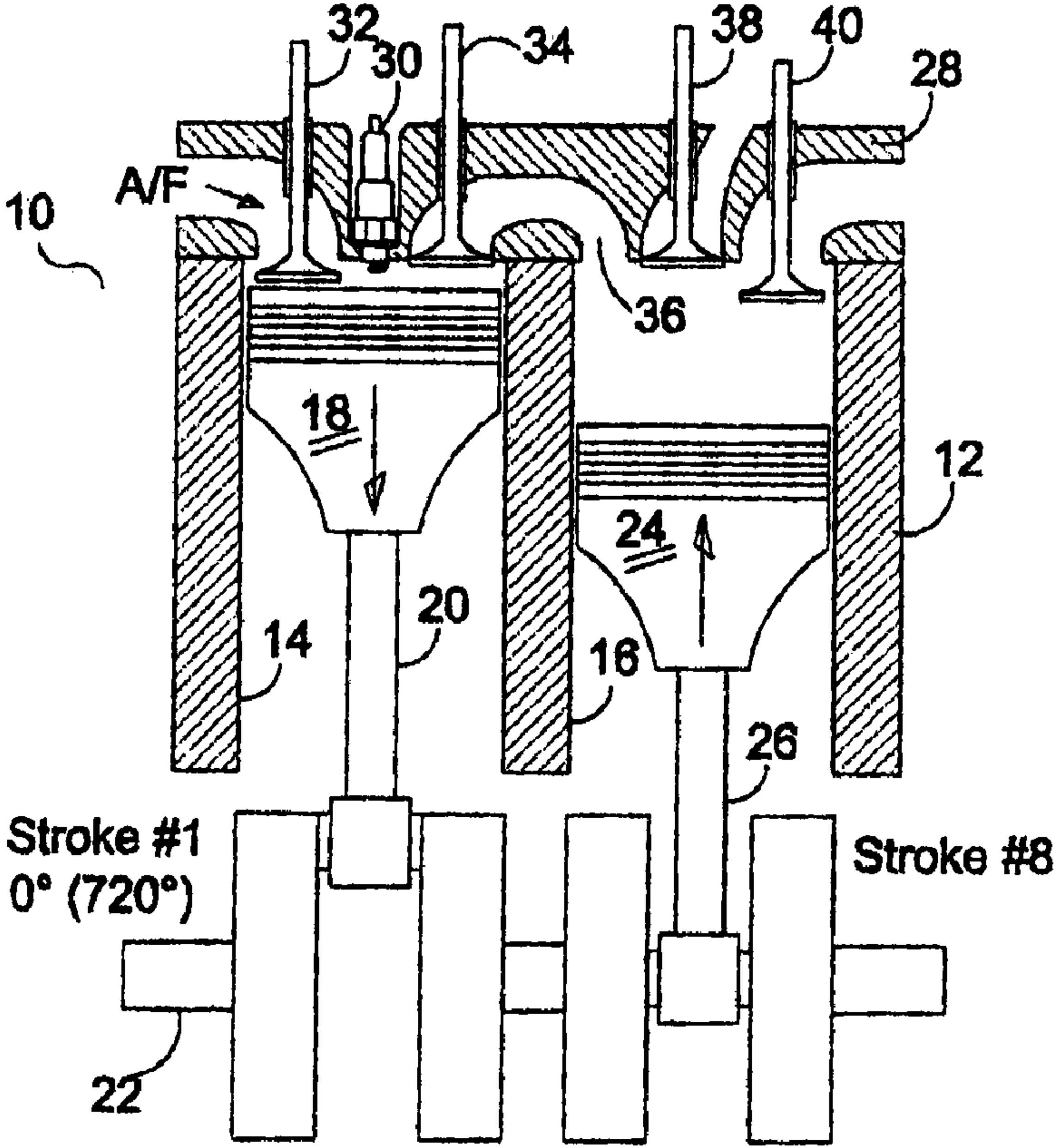
32
30
34
38
40
28
A/F
10
36
18
12
24
20
14
16
26
Stroke #1
0° (720°)
Stroke #8
22