May 4, 1965 H. J. KAHN 3,181,187

BRIDGE CONSTRUCTION

Filed May 3, 1961 2 Sheets-Sheet 1

FIG 1.

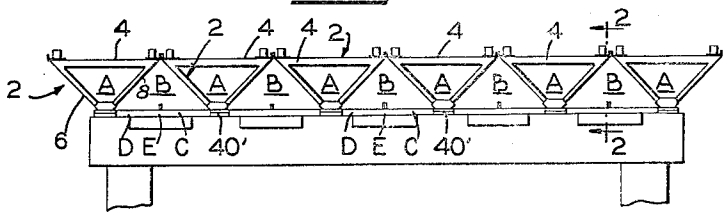

FIG 2.

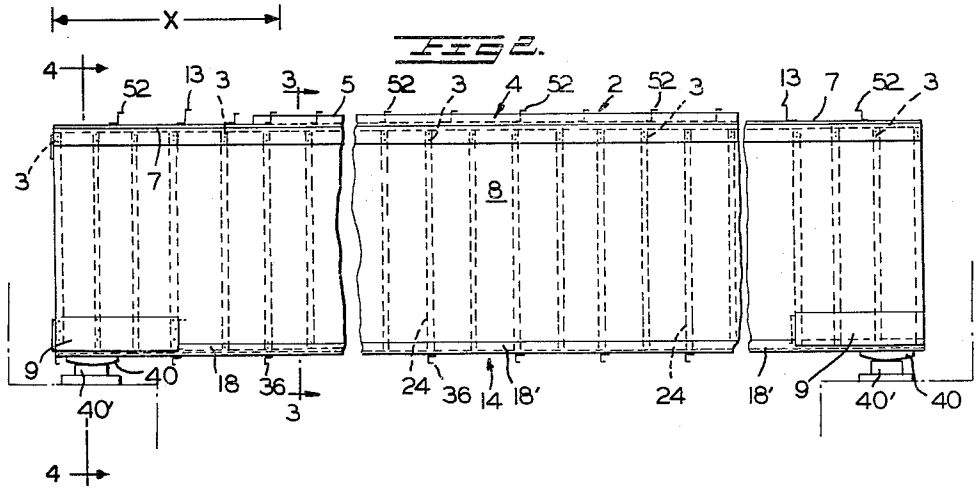

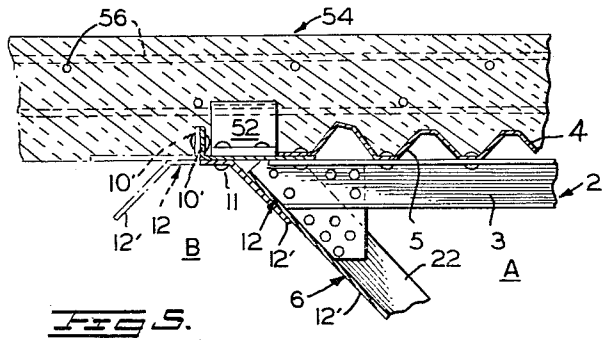

FIG 5.

INVENTOR
HARRY J. KAHN

BY James E. Toomey
ATTORNEY

May 4, 1965 H. J. KAHN 3,181,187

BRIDGE CONSTRUCTION

Filed May 3, 1961 2 Sheets-Sheet 2

Fig 3.

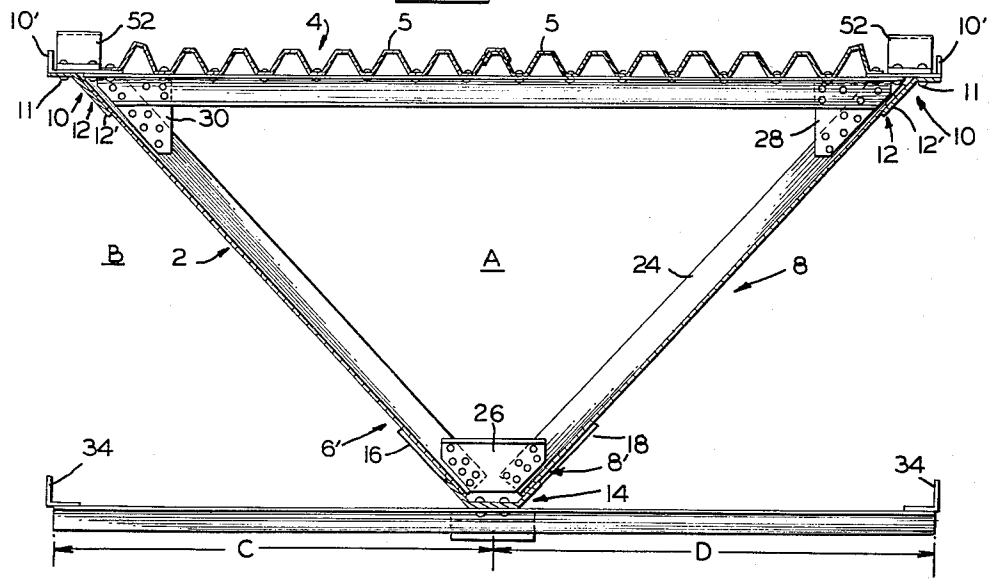

Fig 4.

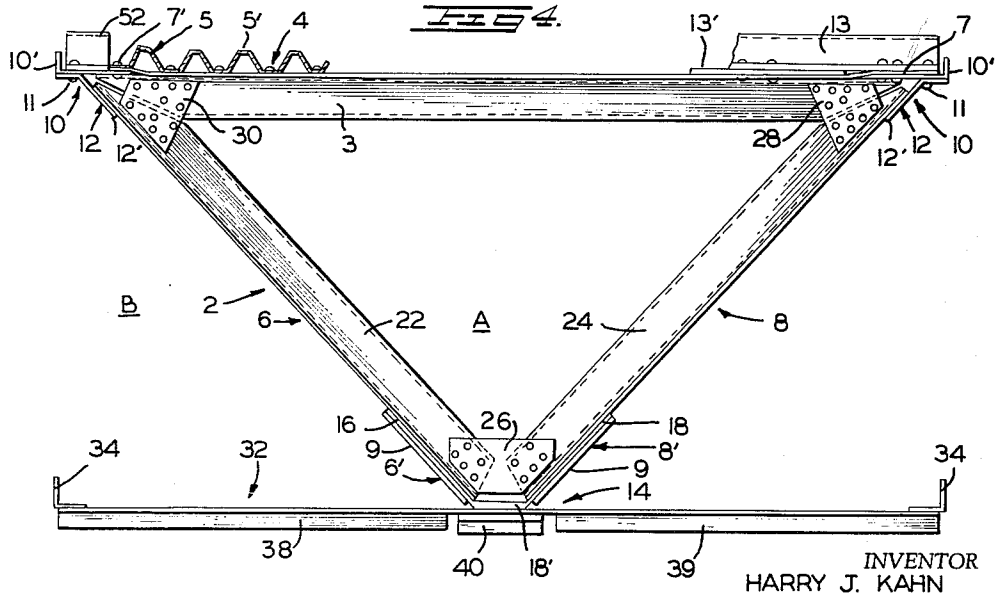

INVENTOR
HARRY J. KAHN

BY James E. Toomey

ATTORNEY

United States Patent Office 3,181,187 Patented May 4, 1965

3,181,187

BRIDGE CONSTRUCTION

Harry J. Kahn, Fresh Meadows, N.Y., assignor to Kaiser Aluminum & Chemical Corporation, Oakland, Calif., a corporation of Delaware

Filed May 3, 1961, Ser. No. 107,579
4 Claims. (Cl. 14—73)

This invention relates to improvements in structural units. More particularly, it relates to improvements in structural beams or modules for bridge structures and the like as well as the bridges in which such structural beams are incorporated.

Accordingly, it is a primary purpose of the instant invention to provide an improved modular beam unit which, when affixed to similar beam units in side-by-side load-supporting and load-transferring relationship, will provide a unique bridge construction.

Other purposes and advantages of the instant invention will be more readily understood by reference to the following detailed description when taken in conjunction with the appended drawings wherein:

FIG. 1 is an over-all schematic end view with parts removed for the sake of clarity of a bridge structure made up of the novel modular beam units of the instant invention;

FIG. 2 is an enlarged fragmentary and broken cross-sectional view generally taken along the line 2—2 of FIG. 1 with parts added and with other parts removed for the sake of clarity;

FIG. 3 is an elevational sectional view of the novel beam unit or module of the instant invention when generally taken along the line 3—3 of FIG. 2;

FIG. 4 is another elevational sectional view with parts broken away of the novel beam module of the instant invention when generally taken along line 4—4 of FIG. 2; and

FIG. 5 is a fragmentary sectional view, with parts added and other parts removed, of part of a bridge structure in the area at which upper lateral edges of adjacent beam units or modules of the instant invention meet and discloses the manner in which the modular beams are generally fastened together as well as the manner in which the pavement making up a roadway is supported by and integrated with the modular beam units.

With further reference to the drawings, and in particular FIGS. 3 and 4, a novel modular beam unit 2 used in fabricating the bridge structure of the instant invention is generally comprised of an elongated top decking or top section 4 supported by a plurality of suitably-spaced and channel-shaped upper cross members 3 and a pair of elongated canted or downwardly and inwardly inclined side members or side sections 6 and 8. When top decking 4 and side sections 6 and 8 are assembled together in a manner to be more fully described hereinafter they form a triangular cell A which in cross section approximates an inverted isosceles triangle.

The top and side sections are secured or assembled together at their points of intersection in the following fashion. Decking 4 can advantageously take the form of suitable metallic sheet elements of a suitable gauge or thickness such as corrugated sheets 5, while side sections 6 and 8 can be made of metallic sheets or plates of a suitable gauge or thickness depending upon the results desired. When the decking for a module includes a plurality of corrugated sheets they can be overlapped in a manner conventional in the art as indicated in FIG. 3 and anchored to the upper flange of the channel beams 3 by rivet means or the like. The outer extremities of channels 3 are secured by welding, riveting or the like to a suitable elongated side stringer assembly 10. In one

form of the invention each stringer assembly can be comprised of two mating parts as indicated in the drawings such that it includes an upper L-shaped member 10' and a lower somewhat L-shaped member 12. Members 10' and 12 can be joined together in abutting relationship by means of bolting 11 or the like with the long side or stem 12' of angle member 12 then being secured by rivets to the plates or panels making up side sections 6 or 8, as the case may be. It will be observed by particular reference to FIGS. 2 and 4 that at the end of each modular beam unit the top decking or section 4 can advantageously include a short flat deck plate member 7 which extends for the distance X as noted in FIG. 2 such that it is interposed between and is overlapped slightly by the end portions of corrugated sheets 5 and certain of the end-most channels 3. The side marginal edges 7' of plate member 7 contact and rest upon the top flanges of channels 3 and angle members 10'. The end portions 5' of sheets 5 as indicated in FIG. 2 overlap plate members 7 for a short distance. The remaining portions of a plate member 7 which are not overlapped by the corrugated sheets provide a support for a uniquely disposed and roughly Z-shaped thermal beam 13 used to compensate for differential expansion between components of the modules and the materials of the roadway disposed thereon. A shim member 13' can be inserted between the thermal beam 13 and the plate 7.

The lower converging edges 6' and 8' of side panels or sections 6 and 8 are secured together by a pair of angle members 16' and 18' which form a roughly U-shaped tie assembly 14. The lower converging portions 6' and 8' of sections 6 and 8 overlap with the flanges 16 and 18 of the angle members 16' and 18' making up tie assembly 14 and are secured thereto. The modular beam unit of the instant invention can be used in a bridge of a single span or in bridges of multiple spans as well as in continuous span-type bridges. It is also to be understood that in multiple-span bridges individual modular units can be varied as to structural depth as governed by structural requirements.

In a further advantageous embodiment of the invention the side sections 6 and 8 can be reinforced and stiffened by inner rib elements 22 and 24, respectively, affixed at pre-determined spaced points along the inside surfaces of the panels making up sections 6 and 8. At least some of those rib elements are disposed in substantial vertical alignment with the channel members 3 supporting the decking elements 5 and combine with these channel members 3 to form internal frames for the module 2, all as indicated in FIGS. 3 and 4. The areas of the lower end portions of the side sections 6 and 8 that are directly supported by bridge piers and/or abutments can be further reinforced by side plates 9 if required. Suitable gusset members 26, 28 and 30 are employed for the purpose of further securing the decking support channels 3 and side sections 6 and 8 to each other. These gusset members are anchored to the channels 3 and the reinforcing ribs 22 and 24 adjacent the converging angular portions of the triangular-shaped modular beam unit 2.

The formation of the modular unit 2 is completed by affixing a bottom panel or section 32 to the inverted apex portion of the modular beam unit at the point where the side sections 6 and 8 thereof converge. Bottom or base section 32 which can be made of heavy gauge metal sheet or plate extends for substantially the same length and width as the top section or decking 4 of the beam unit. The completed modular beam unit 2 can thus be considered as being basically comprised of an inverted and substantially isosceles triangle, the apex of which is mounted on and secured to an intermediate portion of a base section 32.

Affixed to the upper side marginal edges of base section 32 is a pair of elongated mating and reinforcing stringer elements 34 which can advantageously have a generally L-shaped configuration. Elements 34 are in substantial vertical alignment with stringer assemblies 10. Dependently attached to the bottom surface of panel member or section 32 is a plurality of spaced reinforcing or stiffening rib elements 36.

As indicated in FIG. 4 a reinforcing rib element 36 can be broken so that it will be comprised of individual rib segments 38 and 39 such as in the case of where the part of the beam module with which the segments 38 and 39 are associated is secured to a conventional bearing assembly 40, which in turn is adapted to rest upon and be secured to a ground-anchoring pier or abutment 40' for a bridge. Bearing assembly 40 is anchored to base section 32 and to tie assembly 14 by bolt means or the like.

The advantages of using the particular modular beam unit or component as disclosed in FIGS. 3 and 4 is as follows:

By incorporating the bottom section 32 in the modular beam unit 2 in the fashion proposed, section 32 along with the elements 34 and 10' serve the dual function of load-transferring structural components as well as efficient guides or jig-type fixtures for matching up and aligning the individual modular units 2 one with another at the time that they are individually assembled together in abutting side-by-side relationship to form a semi-monocoque bridge structure at the bridge site. In addition, the use of such modules eliminates the necessity of the conventional and expensive false work or scaffolding that has been mandatory in conventional bridge erection procedures to date.

In effect, the modular structural unit or beam can be considered as a hollow beam construction made up of an inverted triangular section superimposed upon a base plate which is substantially coextensive in length and width with the inverted base of the triangular section of the module. The bridge modules are mounted on suitable bridge piers or abutments 40' and secured to each other by means of bolts thrust through suitable openings in the mating angles 10' and 34 at the top and bottom of the modules 2.

For the purposes of this invention, individual modules or beams can be comprised of singular sections 4, 6, 8 and 32 or a plurality of sections 4, 6, 8 and 32 spliced together in abutting longitudinal relationship to form an extra long beam for spanning abutments and piers spaced a considerable distance apart. It is also within the contemplation of this invention that continuous span bridges can be made up of the modular beam units having the same basic configuration as described above.

When a plurality of the modular beam units 2 are placed side by side and in load-bearing and transferring relationship, the side sections 6 and 8 form corresponding and common sides of upright triangular modules or cells B interspersed or interdigited between the inverted triangular modules or cells A. At the same time each of the opposing sides or wing portions C and D of bottom section 32 form substantially one-half of the base structure E of an upright triangular cell B.

The use of the modular beam unit 2 of the instant invention eliminates the necessity for using unusual shapes and joining elements and facilitates the construction of the over-all bridge. The final bridge which is constructed in accordance with the invention embodies a semi-monocoque structure in which the alternate inverted and upright hollow triangular cell units A and B effectively withstand all the normal loads to which a bridge is subjected during use. The upper deck section 4 resists primarily compression stresses while the bottom section 32 primarily resists tension stresses for simple beams. Various parts of the beam units 2 can be slightly modified to carry the loadings imposed by a continuous beam structure without departing from the teachings of the instant invention. These tension stresses are also effectively withstood, irrespective of the fact that the bases of the upright triangular cells B formed from wings C and D are interrupted at the point where these elements 34 are secured together. In other words, the splitting of the base E of an upright triangular cell in the manner proposed does not affect the basic structural integrity of the semi-monocoque bridge structure formed by the triangular modular beam units 2.

With further reference to the drawings, such as FIGS. 3 and 5, it will be observed that the decking or top section 4 advantageously supports the conventional roadbed 54 which can be asphalt or concrete reinforced by rods 56. Small and roughly Z-shaped clip elements 52 can also be affixed at the upper extremities of the modules 2 such as to stringer assemblies 10 at predetermined spaced points. Clip elements 52 become embedded in the roadbed surfacing material 54 and act as shear ties for transferring loads from the roadbed directly to the modular sections or units 2, thereby forming an integrated roadbed and modular unit structure.

The thermal beams 13 are arranged on the deck plates 7 at preselected points such that they will efficiently react and transfer stresses created by differences in thermal elongation and contraction between the metal components of the modular beam unit 2 and the roadway materials disposed on the module.

All of the various components making up a modular beam unit 2 can be advantageously made of conventional structural materials including those made of light metal such as aluminum and aluminum alloys and these components can be of varying sizes and thicknesses depending upon the results desired.

By utilizing the modular structural arrangement described in detail above, light metals such as aluminum can be used therein with the greatest efficiency and, therefore, the over-all bridge cost is not unnecessarily high. The cubic volume of concrete or asphalt required for the roadbed is reduced by from one-third to one-half that customarily used, a factor which reduced still further the amount of dead weight to be supported by the beams. The concrete or asphalt roadway is fully integrated with the upper structure of the bridge, and therefore, is supported throughout its area. In addition, a load applied at any point on the bridge structure will be supported by the entire bridge structure and not merely by the beams or units 2 disposed immediately beneath the load—that is the entire bridge structure is deflected by a load applied thereto. In other words, all of the modules in the bridge structure will bear their fair share of the loads imposed on the bridge at any given time. A structure as described above provides its greatest support under areas that will be highly loaded and lesser support in lightly-loaded regions. The lightness of the structure when made of light metal components lends itself to ease of mobility by all means of transportation and reduces the requirement of heavy field handling equipment.

A semi-monocoque cellular structure of the type described above has tremendous torsional rigidity to the extent that a load placed eccentrically on one side of the structure activates all of the material of all the beams requiring the entire bridge structure to contribute resistance to the load and not solely the local beams or modules adjacent to the point of load application. This alleviates the requirement for the concrete roadway slab to act as the primary load-transferring member. Actually, the centroid of such a composite section is just a little below the lower surface of the concrete.

An advantageous embodiment of the invention has been disclosed and described. It is obvious that various changes and modifications may be made therein without departing from the spirt and scope thereof as defined in the appended claims, wherein

What is claimed is:

1. In a bridge construction the combination of a plurality of elongated modular units secured together to form a load-bearing structure, said modular units defining interdigited hollow upper inverted and hollow lower upstanding triangular cells, each of said units comprising a hollow beam member provided with a top section and interconnected downwardly and inwardly projecting side sections converging to an apex, a supporting base section secured along its longitudinal mid-portion to said apex and forming wing portions extending laterally therefrom, said base section being coextensive with and in parallel alignment with the top section with which it is associated, and means secured to the terminal edges of the top and base sections for alignment of adjacent beam members along substantially their entire lengths and the connection of adjacent beam members in abutting side-by-side load receiving and transferring relationship, a wing portion of each base section forming half of the structural base of a lower triangular cell.

2. The combination as set forth in claim 1 including shear-tie members secured to the top section of each modular unit, said shear-tie members being adapted to be embedded in the roadbed surfacing material supported by the bridge structure.

3. An elongated modular unit of the type described for use in a load-bearing bridge structure, said modular unit comprising a hollow inverted triangular beam member provided with a top section and interconnected downwardly and inwardly projecting side sections converging to an apex, a supporting base section secured along its longitudinal mid-portion to said apex and forming wing portions extending laterally therefrom, said base section

being coextensive with and in parallel alignment with the top section with which it is associated, and means secured to the terminal edges of the top and base sections for alignment and interconnection of adjacent beam members along substantially their entire lengths, a wing portion of the supporting base section being adapted to form half of the structural base of an upright triangular cell in a bridge structure in which the unit is incorporated.

4. An elongated modular unit as set forth in claim 3 including stringer elements secured to the terminal edges of the top and base sections for alignment of the modular unit with similarly constructed units along substantially their entire length and the connection of adjacent units in abutting side-by-side load receiving and transferring relationship.

References Cited by the Examiner

UNITED STATES PATENTS

1,952,449	3/34	Marks	50—283
1,964,208	6/34	Leland	189—37
2,016,616	10/35	Schaub	50—290
2,229,671	1/41	Powers	50—290
2,340,176	1/44	Cueni	50—290
2,626,688	1/53	Lagaard	189—37
3,103,025	9/63	Gassner et al.	14—73 X

FOREIGN PATENTS

566,546	4/58	Belgium.

OTHER REFERENCES

P. 25; 9/58, Engineering News Record.

JACOB L. NACKENOFF, *Primary Examiner.*