PCT WORLD INTELLECTUAL PROPERTY ORGANIZATION
International Bureau

INTERNATIONAL APPLICATION PUBLISHED UNDER THE PATENT COOPERATION TREATY (PCT)

(51) International Patent Classification 6 : G06K 17/00, 5/02	A1	(11) International Publication Number: **WO 98/27512**
		(43) International Publication Date: 25 June 1998 (25.06.98)

(21) International Application Number: PCT/EP97/06797

(22) International Filing Date: 4 December 1997 (04.12.97)

(30) Priority Data:
VE96A000040 16 December 1996 (16.12.96) IT

(71) Applicant *(for all designated States except US)*: C.I.M. CARD IDENTIFICATION MACHINES S.P.A. [IT/IT]; Via Serra, 2, I-40012 Calderara di Reno (IT).

(72) Inventor; and
(75) Inventor/Applicant *(for US only)*: MUCELLI, Alberto [IT/IT]; Via Serra, 2, I-40012 Calderara di Reno (IT).

(74) Agent: PIOVESANA, Paolo; Corso del Popolo, 70, I-30172 Venezia Mestre (IT).

(81) Designated States: AL, AM, AT, AU, AZ, BA, BB, BG, BR, BY, CA, CH, CN, CU, CZ, DE, DK, EE, ES, FI, GB, GE, GH, HU, IL, IS, JP, KE, KG, KP, KR, KZ, LC, LK, LR, LS, LT, LU, LV, MD, MG, MK, MN, MW, MX, NO, NZ, PL, PT, RO, RU, SD, SE, SG, SI, SK, SL, TJ, TM, TR, TT, UA, UG, US, UZ, VN, YU, ZW, ARIPO patent (GH, KE, LS, MW, SD, SZ, UG, ZW), Eurasian patent (AM, AZ, BY, KG, KZ, MD, RU, TJ, TM), European patent (AT, BE, CH, DE, DK, ES, FI, FR, GB, GR, IE, IT, LU, MC, NL, PT, SE), OAPI patent (BF, BJ, CF, CG, CI, CM, GA, GN, ML, MR, NE, SN, TD, TG).

Published
With international search report.
Before the expiration of the time limit for amending the claims and to be republished in the event of the receipt of amendments.

(54) Title: METHOD FOR PERSONALIZING FLAT SUPPORTS

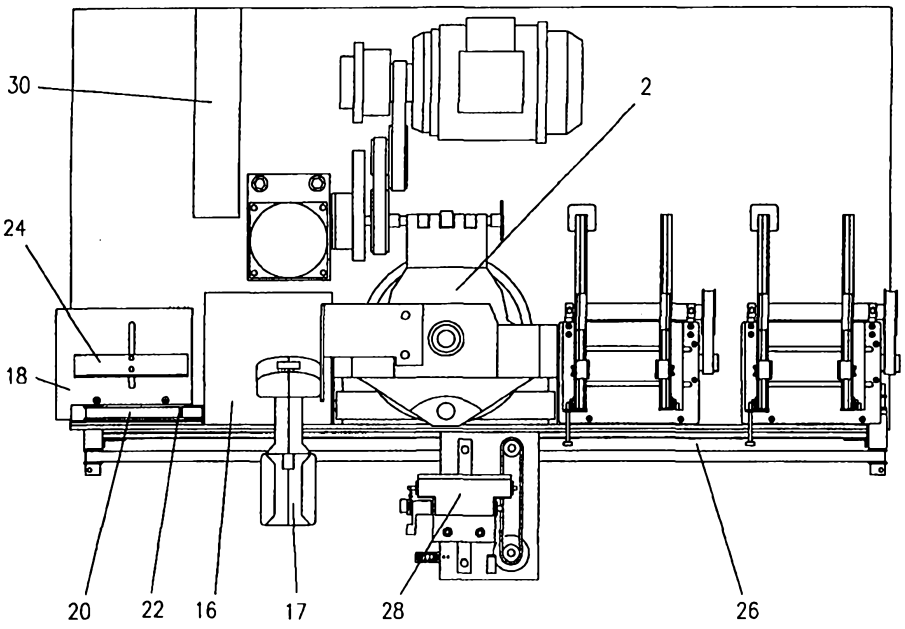

(57) Abstract

A method for personalizing flat supports by punching, characterised by comprising the following stages: withdrawing from a holder (10, 12) a card (14) to be personalized, transferring said card into a punching station (2) in which a bar code is punched corresponding to the data to be personalized, transferring said punched card to a bar code reading station (17), verifying that the bar code read in the reading station corresponds to the bar code memorized in a control unit (30), and if they do not correspond then eliminating said card, or if they do correspond then transferring said card to the punching station (2) for completing the punching cycle with the alphanumerical characters corresponding to the bar code characters.

FOR THE PURPOSES OF INFORMATION ONLY

Codes used to identify States party to the PCT on the front pages of pamphlets publishing international applications under the PCT.

AL	Albania	**ES**	Spain	**LS**	Lesotho	**SI**	Slovenia
AM	Armenia	**FI**	Finland	**LT**	Lithuania	**SK**	Slovakia
AT	Austria	**FR**	France	**LU**	Luxembourg	**SN**	Senegal
AU	Australia	**GA**	Gabon	**LV**	Latvia	**SZ**	Swaziland
AZ	Azerbaijan	**GB**	United Kingdom	**MC**	Monaco	**TD**	Chad
BA	Bosnia and Herzegovina	**GE**	Georgia	**MD**	Republic of Moldova	**TG**	Togo
BB	Barbados	**GH**	Ghana	**MG**	Madagascar	**TJ**	Tajikistan
BE	Belgium	**GN**	Guinea	**MK**	The former Yugoslav Republic of Macedonia	**TM**	Turkmenistan
BF	Burkina Faso	**GR**	Greece			**TR**	Turkey
BG	Bulgaria	**HU**	Hungary	**ML**	Mali	**TT**	Trinidad and Tobago
BJ	Benin	**IE**	Ireland	**MN**	Mongolia	**UA**	Ukraine
BR	Brazil	**IL**	Israel	**MR**	Mauritania	**UG**	Uganda
BY	Belarus	**IS**	Iceland	**MW**	Malawi	**US**	United States of America
CA	Canada	**IT**	Italy	**MX**	Mexico	**UZ**	Uzbekistan
CF	Central African Republic	**JP**	Japan	**NE**	Niger	**VN**	Viet Nam
CG	Congo	**KE**	Kenya	**NL**	Netherlands	**YU**	Yugoslavia
CH	Switzerland	**KG**	Kyrgyzstan	**NO**	Norway	**ZW**	Zimbabwe
CI	Côte d'Ivoire	**KP**	Democratic People's Republic of Korea	**NZ**	New Zealand		
CM	Cameroon			**PL**	Poland		
CN	China	**KR**	Republic of Korea	**PT**	Portugal		
CU	Cuba	**KZ**	Kazakstan	**RO**	Romania		
CZ	Czech Republic	**LC**	Saint Lucia	**RU**	Russian Federation		
DE	Germany	**LI**	Liechtenstein	**SD**	Sudan		
DK	Denmark	**LK**	Sri Lanka	**SE**	Sweden		
EE	Estonia	**LR**	Liberia	**SG**	Singapore		

METHOD FOR PERSONALIZING FLAT SUPPORTS

This invention relates to a method for personalizing flat supports, an apparatus for effecting the method, and a support obtained by the method.

Methods for personalizing metal or plastic cards by punching alphanumerical characters are known.

These methods generally involve the use of a gripper which from a holder containing a plurality of stacked cards withdraws one card and transfers it into a position below a punching unit which forms in relief a series of alphanumerical characters corresponding to the data to be personalized on the card, and also effects other possible processes to which the card has to be subjected.

With the increasing use of bar code readers in recent years, card personalizing methods have been proposed using a bar code. This system of personalization has however not been found to be reliable because it does not enable the correctness of the data transferred to the card to be checked after processing.

Moreover, attempts to personalize the card either by punching alphanumerical data or by punching data in bar code have encountered a considerable limitation because the card obtained may carry impressed alphanumerical data and bar code data not corresponding to the effective data to be personalized. Again, whereas incorrect cards can be eliminated by visual reading if in alphanumerical code, the same cannot be said if in bar code, which as stated cannot be checked.

To this must be added the fact that after the control system for the punching unit has transferred the data to said unit, it generally eliminates the

data from its memory, hence if the data punched in bar code do not correspond to the alphanumerical data, not only is the card unusable but in addition the control system has to be reloaded with the data, with considerable time loss.

The object of the invention is to eliminate these drawbacks by providing a method for personalizing a flat support which enables data to the punched both in alphanumerical characters and in bar code, the method enabling the correctness of the punched bar code data to be checked.

This object and other ones are attained according to the invention through a method for personalizing flat supports as described in claim 1.

To effect the method an apparatus is provided as claimed in claim 2.

A support is obtained through the method as described in claim 6.

A preferred embodiment of the present invention is described in detail hereinafter with reference to the accompanying drawings, on which:

Figure 1 is a schematic plan view form above showing an apparatus for implementing the method of the invention; and

Figure 2 is a side view thereof.

As can be seen from the figures, the method of the invention involves the use of an apparatus comprising substantially a punching unit 2 consisting of two superposed rotatable discs 4,6, of which the upper disc 4 comprises a plurality of radial appendices carrying impressions corresponding to the overlying reliefs.

Operating hammers 8 are provided in a position above the upper disc 4 and below the lower disc 6.

To the side of said unit there are provided two containers 10,12 for a

plurality of stacked cards 14, the width of the cards in one container being different from the width of the cards in the other container. On that side of the punching unit distant from the containers there is provided a discharge tray 16 with an overlying optical reader 17, to the side of these there being provided a station 18 for feeding the card to the subsequent processing stages. Said station consists of an advancement belt 20 provided with a dragging tooth 22. In said station there is also provided a movable side wall 24 with its operating device regulated by a group of photoelectric cells 25 provided in correspondence with the card containers 10,12.

The loading containers 10,12, the punching unit 2, the discharge tray 16 and the station 18 are longitudinally aligned, there being provided parallel to said components a guide 26 on which there is slidingly mounted a gripper 28, which is also movable transversely to the slide.

Finally the apparatus comprises a unit 30 for controlling and handling the various operations such as the rotation of the discs 4,6, the operation of the hammers 8, the movement of the gripper 28, the operation of the belt 20, the movement of the movable side wall 24, etc..

The apparatus also comprises a plurality of operating members (motors, actuators, etc.), transmission members and automatic devices (switches, counters, various controls, etc.) for effecting the automatic processing cycle, but which have not been illustrated or described for simplicity. they will however be referred to in the course of the following description by a simply mentioning their presence, they being of traditional type and as such known to an expert of the art.

The apparatus of the invention operates as follows:

after bringing the gripper 28 into a position facing one of the two loading containers 10,12, a pusher member (not shown on the drawings) inserts the lower card of the stack between the jaws of the gripper, which then moves along the guide 26 to position the card between the two discs 4,6 of the punching unit 2.

During this withdrawal stage the group of photoelectric cells 25 measures the width dimension of the card, the control unit 30 then causing the side wall 24 of the discharge station to move in order to adapt to this dimension.

On the basis of the information received the unit 30 then causes the discs to rotate so that by acting on the radial appendices, the hammers 8 punch a bar code.

On termination of this stage the gripper 28 advances along the guide 26 and positions the card above the discharge tray 16 and below the optical reader 17, which reads the bar code punched into the card and feeds the reading to the control unit for comparison with the memorized data. If the bar code punched into the card and the data memorized in the control unit do not coincide, this latter causes the gripper to slacken its jaws so that the card falls into the discharge tray 16. If however the data coincide, the control unit causes the gripper to reposition the card in the punching unit where the alphanumerical characters corresponding to the data already punched in bar code are now punched.

On termination of this operation the gripper transfers the card to the discharge station 18 where, as already stated, the movable side wall 24 has been shifted to a distance such as to form a stop for the transverse movement

of the card and its consequent resting against the advancement belt.

From the aforegoing it is apparent that the method of the invention has numerous advantages, and in particular:

- it enables the correctness of the data impressed in bar code to be verified,
- it provides reliable correlation between the data impressed in alphanumerical characters and the data impressed in bar code,
- it effects these operations in a reliable manner.

CLAIMS

1. A method for personalizing flat supports by punching, characterised by comprising the following stages:

- withdrawing from a holder (10,12) a card (14) to be personalized,
- transferring said card into a punching station (2) in which a bar code is punched corresponding to the data to be personalized,
- transferring said punched card to a bar code reading station (17),
- verifying that the bar code read in the reading station corresponds to the bar code memorized in a control unit (30), and if they do not correspond then eliminating said card, or if they do correspond then transferring said card to the punching station (2) for completing the punching cycle with the alphanumerical characters corresponding to the bar code characters.

2. An apparatus for implementing the method claimed in claim 1, characterised by comprising:

- at least one container (10,12) for a plurality of cards (14) to be personalized,
- a punching unit (2) both for alphanumerical characters and for bar code characters,
- a bar code reader (17),
- a discharge station (16),
- a station for feeding the cards to other processing stages,
- a movable member (28) for transferring said card between said container, said punching unit (2) and one of said stations,
- a control unit (30).

3. An apparatus as claimed in claim 2, characterised in that said discharge

station (16) consists of an advancement belt (20) provided with a tooth (22), and comprises a movable side wall (24).

4. An apparatus as claimed in claim 3, characterised in that the movable side wall (24) is connected to sensors (25) for measuring the card dimensions and positioned in correspondence with the containers (10,12).

5. An apparatus as claimed in claim 2, characterised in that the movable member consists of a gripper (28) slidable along a guide (26).

6. A support obtained by the method of claim 1, characterised by comprising a plurality of alphanumerical characters and a bar code, both being formed by punching.

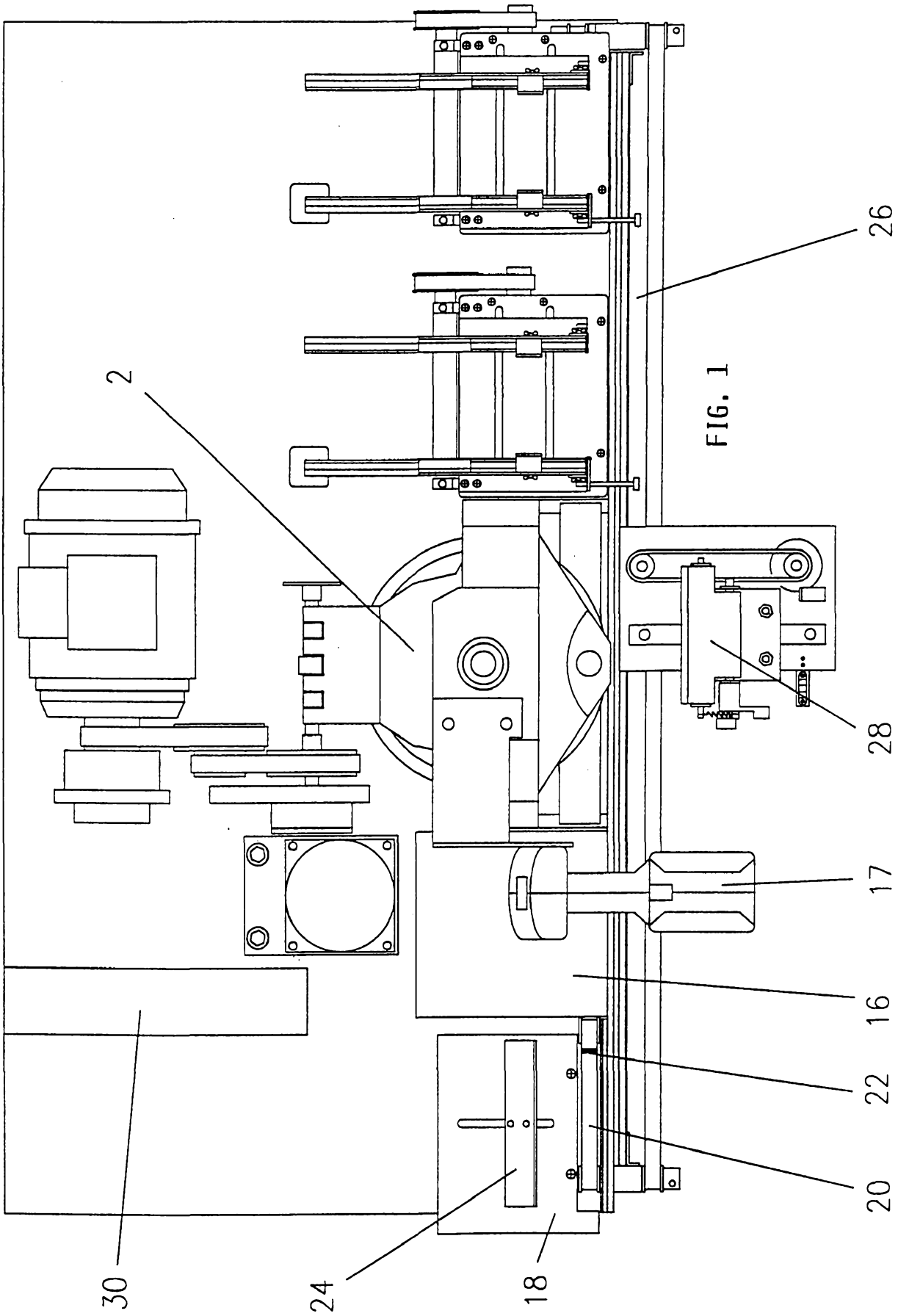

FIG. 1

FIG. 2

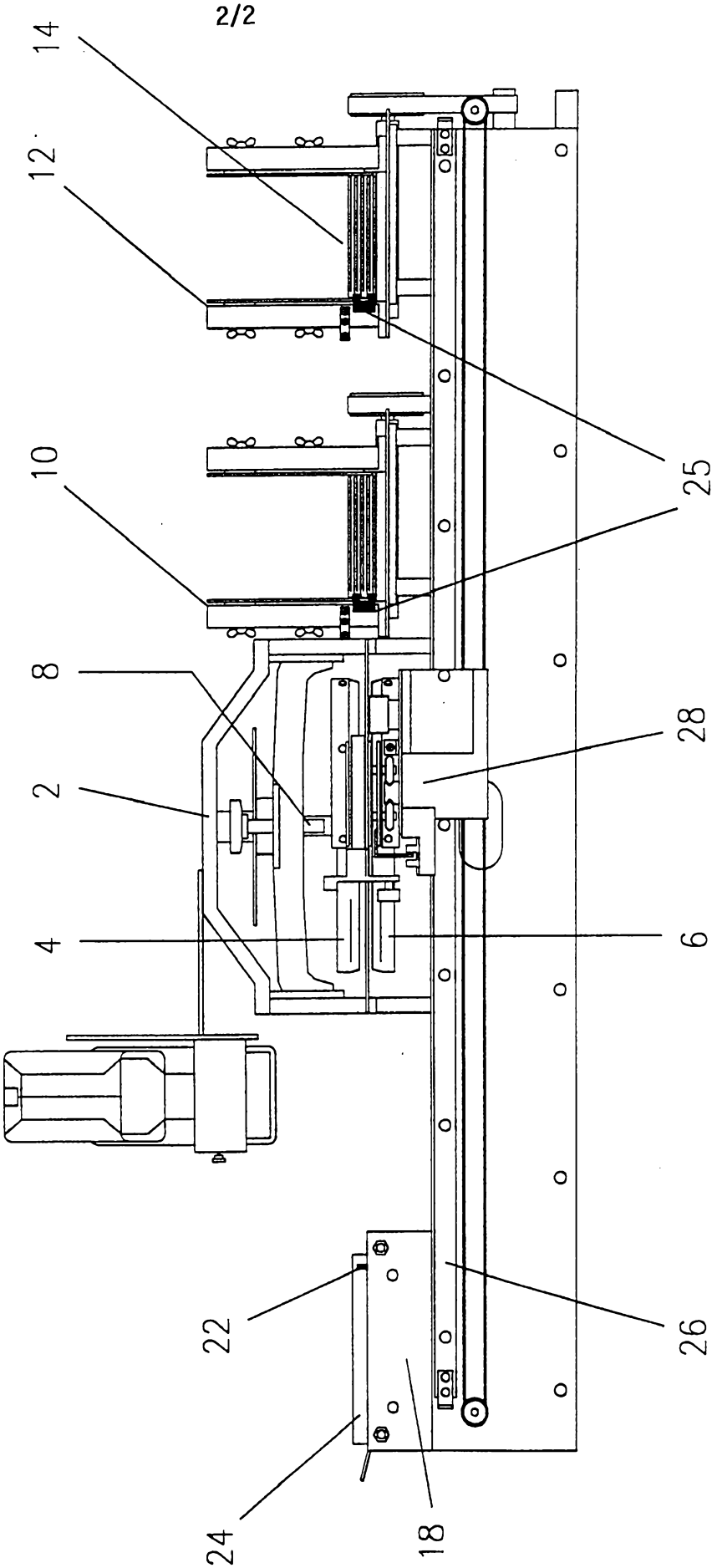

INTERNATIONAL SEARCH REPORT

International Application No
PCT/EP 97/06797

A. CLASSIFICATION OF SUBJECT MATTER
IPC 6 G06K17/00 G06K5/02

According to International Patent Classification(IPC) or to both national classification and IPC

B. FIELDS SEARCHED

Minimum documentation searched (classification system followed by classification symbols)
IPC 6 G06K

Documentation searched other than minimumdocumentation to the extent that such documents are included in the fields searched

Electronic data base consulted during the international search (name of data base and, where practical, search terms used)

C. DOCUMENTS CONSIDERED TO BE RELEVANT

Category °	Citation of document, with indication, where appropriate, of the relevant passages	Relevant to claim No.
X	EP 0 431 172 A (TOPPAN PRINTING CO LTD) 12 June 1991 see column 1, line 30 - line 41 see column 9, line 35 - column 16, line 44; figure 1 ---	1-6
X	EP 0 251 637 A (NAT BUSINESS SYST) 7 January 1988 see page 12, line 23 - page 13, line 13 see page 21, line 45 - line 51; figure 6 ---	1-6
X	EP 0 296 024 A (LACROUTS CAZENAVE S A R L) 21 December 1988	6
A	see abstract; figure 1 --- -/--	1

[X] Further documents are listed in the continuation of box C.

[X] Patent family members are listed in annex.

° Special categories of cited documents :

"A" document defining the general state of the art which is not considered to be of particular relevance

"E" earlier document but published on or after the international filing date

"L" document which may throw doubts on priority claim(s) or which is cited to establish the publicationdate of another citation or other special reason (as specified)

"O" document referring to an oral disclosure, use, exhibition or other means

"P" document published prior to the international filing date but later than the priority date claimed

"T" later document published after the international filing date or priority date and not in conflict with the application but cited to understand the principle or theory underlying the invention

"X" document of particular relevance; the claimed invention cannot be considered novel or cannot be considered to involve an inventive step when the document is taken alone

"Y" document of particular relevance; the claimed invention cannot be considered to involve an inventive step when the document is combined with one or more other such documents, such combination being obvious to a person skilled in the art.

"&" document member of the same patent family

1

Date of the actual completion of theinternational search	Date of mailing of the international search report
14 May 1998	22/05/1998

Name and mailing address of the ISA	Authorized officer
European Patent Office, P.B. 5818 Patentlaan 2 NL - 2280 HV Rijswijk Tel. (+31-70) 340-2040, Tx. 31 651 epo nl, Fax: (+31-70) 340-3016	Gysen, L

Form PCT/ISA/210 (second sheet) (July 1992)

INTERNATIONAL SEARCH REPORT

International Application No
PCT/EP 97/06797

C.(Continuation) DOCUMENTS CONSIDERED TO BE RELEVANT

Category °	Citation of document, with indication,where appropriate, of the relevant passages	Relevant to claim No.
A	EP 0 440 124 A (NIPPON ELECTRIC CO ;NIPPON ELECTRIC IND (JP)) 7 August 1991 see column 7, line 49 - column 8, line 22; figure 4 ---	1,6
A	PATENT ABSTRACTS OF JAPAN vol. 014, no. 003 (M-915), 8 January 1990 & JP 01 253495 A (NIPPON DATA KAADE KK), 9 October 1989, see abstract -----	1,6

1

Form PCT/ISA/210 (continuation of second sheet) (July 1992)

INTERNATIONAL SEARCH REPORT

Information on patent family members

International Application No
PCT/EP 97/06797

Patent document cited in search report	Publication date	Patent family member(s)	Publication date
EP 0431172 A	12-06-91	JP 2546408 B	23-10-96
		JP 3284944 A	16-12-91
		JP 2039271 C	28-03-96
		JP 3079543 A	04-04-91
		JP 7064456 B	12-07-95
		JP 3114859 A	16-05-91
		JP 1991344 C	22-11-95
		JP 3114858 A	16-05-91
		JP 7017079 B	01-03-95
		JP 3143636 A	19-06-91
		CA 2035881 A	05-01-91
		DE 69028079 D	19-09-96
		DE 69028079 T	23-01-97
		WO 9100183 A	10-01-91
		NO 302281 B	16-02-98
		US 5326179 A	05-07-94
EP 0251637 A	07-01-88	US 4755069 A	05-07-88
		AU 7457287 A	24-12-87
		CA 1306806 A	25-08-92
		DE 3781948 A	05-11-92
		JP 63054291 A	08-03-88
		US 4900168 A	13-02-90
		US 4866545 A	12-09-89
EP 0296024 A	21-12-88	FR 2616565 A	16-12-88
		DE 3875283 A	19-11-92
		US 4976179 A	11-12-90
		US 4989483 A	05-02-91
EP 0440124 A	07-08-91	JP 3226886 A	07-10-91
		JP 2063613 C	24-06-96
		JP 3271879 A	03-12-91
		JP 7086895 B	20-09-95
		JP 3269383 A	29-11-91
		JP 1945271 C	23-06-95
		JP 3271886 A	03-12-91
		JP 6079200 B	05-10-94
		JP 4160691 A	03-06-92
		DE 69127912 D	20-11-97

INTERNATIONAL SEARCH REPORT

Information on patent family members

International Application No
PCT/EP 97/06797

Patent document cited in search report	Publication date	Patent family member(s)	Publication date
EP 0440124 A		DE 69127912 T	05-03-98
		EP 0714070 A	29-05-96
		EP 0714071 A	29-05-96
		EP 0714072 A	29-05-96
		US 5235169 A	10-08-93
		US 5268566 A	07-12-93
		US 5262622 A	16-11-93
		US 5231275 A	27-07-93