May 7, 1957 S. R. SCHEYER 2,791,051

FLUSH MOUNTED PICTURE FRAME OR THE LIKE

Filed May 4, 1953 2 Sheets-Sheet 1

Fig. 1

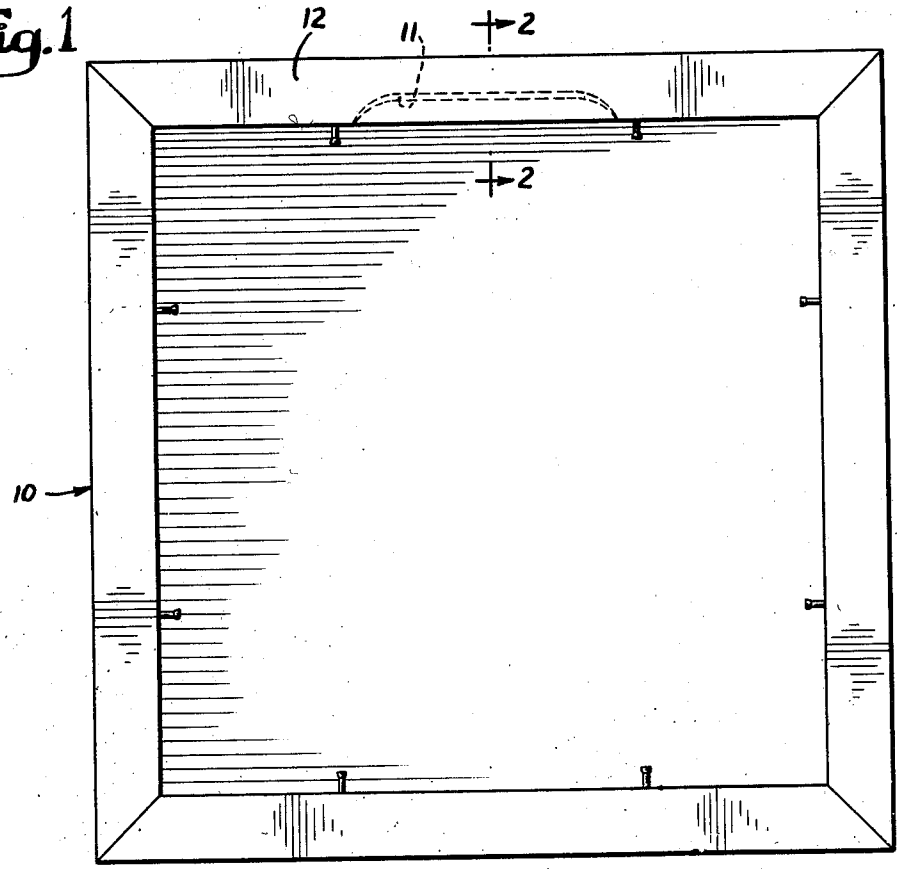

Fig. 2

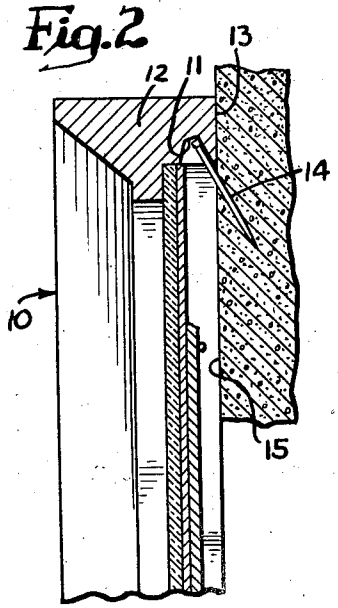

Fig. 3

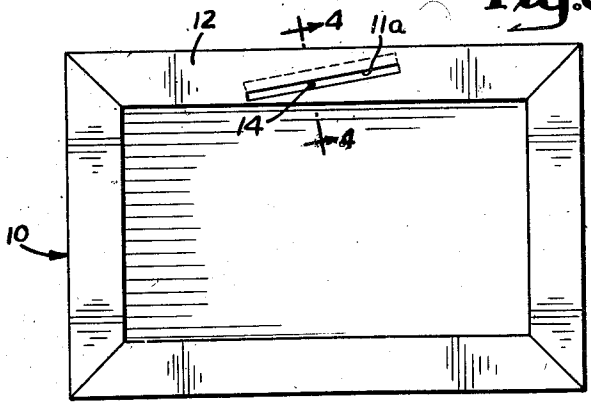

INVENTOR.
STUART R. SCHEYER

BY

Carlson, Ditzner, Hubbard & Wolfe
Attys.

May 7, 1957 S. R. SCHEYER 2,791,051

FLUSH MOUNTED PICTURE FRAME OR THE LIKE

Filed May 4, 1953 2 Sheets-Sheet 2

Fig. 4

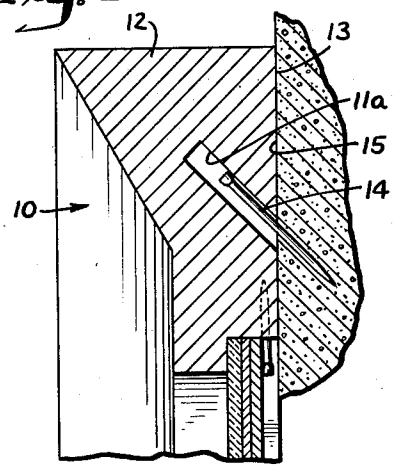

Fig. 5

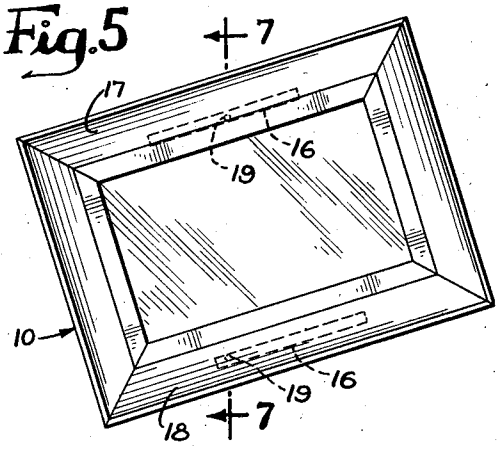

Fig. 6

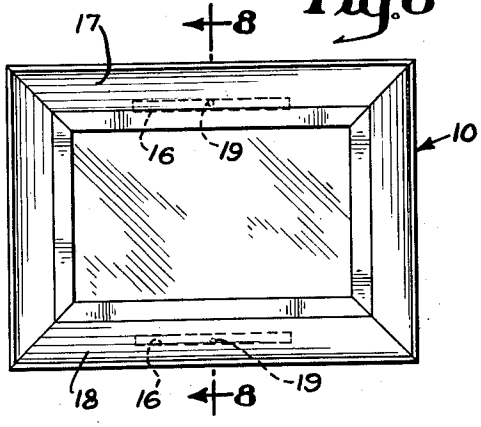

Fig. 7

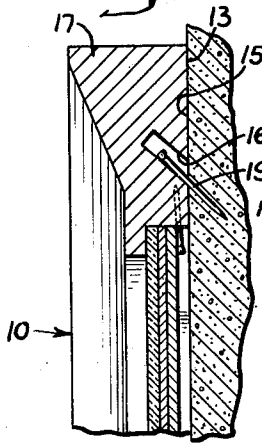

Fig. 8

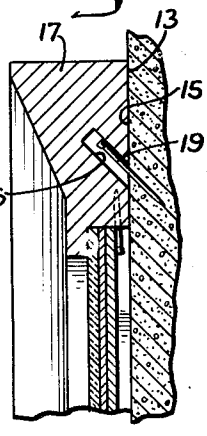

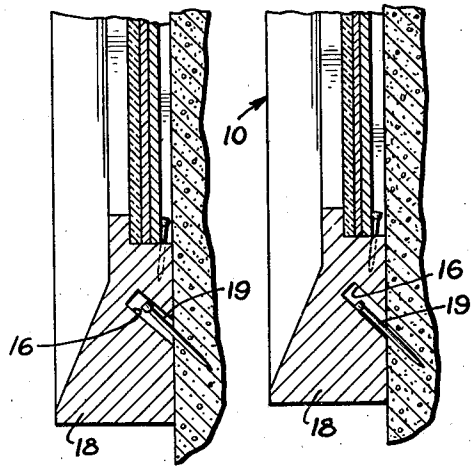

INVENTOR.
STUART R. SCHEYER

BY

Carlson, Fitzner, Hubbard & Wolfe

Attys.

United States Patent Office

2,791,051

Patented May 7, 1957

2,791,051

FLUSH MOUNTED PICTURE FRAME OR THE LIKE

Stuart R. Scheyer, Chicago, Ill., assignor to Reliance Industries, Inc., Chicago, Ill., a corporation of Illinois

Application May 4, 1953, Serial No. 352,914

1 Claim. (Cl. 40—152.1)

The present invention relates to picture frames or the like adapted to be wall mounted, and has particularly to do with provision for mounting such articles flat or flush against the wall surface.

The general aim of the invention is to provide a picture frame or the like which is adapted to be flush mounted on a vertical wall, that is, with the rear face of the article in flat, contiguous relation to the wall; which is simple, economically made, and easily mounted on an ordinary nail in the wall without the need for special fittings, such as hooks, wire, or brads, on either the frame or the wall; which may have its elevation easily adjusted without repositioning the nail; and which is constrained against rotation or skewing when once mounted.

Such an arrangement is particularly desirable in mounting a matched set of framed pictures in a group. Much of the charm of such decoration is lost if the frames lean out from the wall or if the locations are uneven and lacking in precision. With the present invention it is possible to simply drive an ordinary nail for each picture, and slap the pictures up, so to speak. They will be flat and snug against the wall, can be readily shifted for corrective alinement. No juggling and maneuvering of special fittings in the cramped space behind the picture is required.

Further objects and advantages of the invention will become apparent as the following description proceeds, taken in conjunction with the accompanying drawings, in which:

Figure 1 is a rear elevation of a picture frame constructed in accordance with the invention;

Figure 2 is a fragmentary sectional view taken along line 2—2 in Fig. 1;

Fig. 3 is a rear elevation of a picture frame embodying a modified form of the invention;

Fig. 4 is a fragmentary sectional view taken along line 4—4 in Fig. 3;

Figs. 5 and 6 are front elevations of a picture frame embodying another modification of the invention; and

Figs. 7 and 8 are fragmentary sectional views taken along lines 7—7 and 8—8, respectively, in Figs. 5 and 6.

Although certain particular embodiments of the invention have been shown and described in some detail, there is no intention thereby to limit the invention to the details of such embodiments. On the contrary, the intention is to cover all alterations, modifications, and equivalents falling within the spirit and scope of the invention as defined in the appended claim.

As shown in the drawing, the present invention contemplates a picture frame or the like which can be hung with its back flush or flat against a vertical wall and with no more than an ordinary nail driven into the wall. The nail is upwardly inclined, but at an angle of more or less random choice. Nor is any special hardware or fitting required in the frame itself. While a picture frame has been illustrated, it will be apparent that the invention is also applicable to similar articles such, for example, as miniature shelves, clocks, lamps, etc.

Referring particularly to Figs. 1 and 2, a rectangular picture frame 10 is shown made of customary wood molding. The molding may take any suitable cross-sectional shape and the frame may be of octagonal or other polygonal outline rather than rectangular, if desired.

In keeping with the invention, a groove or undercut 11, running lengthwise along the upper rail 12 of the frame 10, is fashioned to open into the rear face 13 of the frame. The cross-sectional configuration of the groove 11 is such that its upper wall or boundary surface is inclined inward and upward from the frame's rear face 13 (Fig. 2). More particularly, the groove 11 is inclined in the direction of its depth to angle toward the margin of the frame. The groove or slot 11 may be quite simply formed by, for example, a router or circular saw. The groove is of a depth slightly greater than the protruding portion of any mounting nail to be used and is of a width to permit free entry of the nail head.

To hang the frame, an ordinary nail 14 is driven at a more or less random upwardly inclined angle into a vertical wall 15. The nail is then inserted into the groove, i. e., frame is then hung with the nail 14 received in the groove 11. The weight of the frame 10 causes it to slide down on the nail 14 until the rear face 13 is flat against the wall 15. The frame is thus securely mounted in a flush position. The frictional engagement of the rear face 13 against the wall will ordinarily cause the frame to remain in a selected position of leveling and even if the nail is not precisely at the vertical center line of the frame. Accordingly, the frame may be slid back and forth horizontally a reasonable amount or skewed angularly to locate it exactly as desired, both as to lateral position and as to leveling.

In the modified form of the invention shown in Figs. 3 and 4, the construction of the picture frame is generally similar to that described above. In this instance, however, a groove or slot 11*a* is cut to angle upwardly in an end-to-end direction, although it is still generally horizontal. With the frame slipped onto an ordinary nail 14 as shown, its vertical position or elevation may be considerably adjusted without removing the frame 10 from the wall 15 or repositioning the nail 14 itself. This is done simply by sliding the frame 10 horizontally so that it rides up or down on the nail 14 due to the endwise incline of the groove 11*a*. While this tends to unbalance the picture slightly, the flush engagement of the rear face 13 against the wall 15 creates a sufficient frictional restraining force to hold the frame in a selected level position. In hanging several pictures in a horizontal row such adjustment affords great convenience, since the nails need not be located with extreme accuracy in a vertical direction before the picture frames are hung.

If desired, grooves angling toward the margin of the frame, as described, may be formed in two or even all four rails of the frame, so that the frame may be hung with any edge topmost without changing any fittings whatever. It is simply slipped onto the nail with the selected edge uppermost.

In another form of the invention (Figs. 5 through 8), two grooves 16 are formed in spaced parallel relation within the rear face 13 of the frame 10, preferably in the rear sides of the top and bottom rails 17 and 18 of the frame as shown. Both the lengthwise and depth dimensions of the grooves 16 are parallel, that is, the grove in the rail 17 is inclined toward the margin of the frame while the groove in the rail 18 is inclined toward the center of the frame. The frame 10 is therefore adapted to be rigidly secured on two spaced nails 19 driven into the wall at upwardly inclined angles. The vertical spacing between the nails 19 is made slightly greater than the vertical spacing between the two grooves 16. In order to mount the frame, it is rotated from its

horizontal position and slipped onto the nails 19 which are received in the grooves 16 as shown in Figs. 5 and 7. The frame may then be rotated back to its horizontal position (Figs. 6 and 8), the two spaced nails 19 thus being jammed against the sides of their respective grooves 16 to provide a rigid mounting of the frame with its rear face 13 flush against the wall 15. The jammed fit of the nails 19 in the grooves 16 (Figs. 6 and 8) locks the frame in position and prevents it from being pulled directly from the wall without first being rotated to the position shown by Fig. 5.

I claim as my invention:

A picture frame or the like having a generally flat rear face adapted to lie flat against a wall, and having a pair of elongated grooves generally parallel in their lengthwise dimensions defined in the upper and lower potrions respectively of said face, said grooves each being angled or undercut in parallelism inwardly and upwardly in their

directions of depth from said face to receive a pair of ordinary nails driven into the wall at more or less random upward angles and spaced apart slightly more than the spacing between said grooves, whereby rotation or skewing of said frame relative to a line connecting the nails after the nails have been entered in respective grooves serves to jam them in said grooves to secure said frame flush against the wall.

References Cited in the file of this patent

UNITED STATES PATENTS

1,499,826	Kassabaum	July 1, 1924
2,137,156	Clark	Nov. 15, 1938
2,262,287	Johnson	Nov. 11, 1941
2,263,901	Olney	Nov. 25, 1941
2,639,529	Fox	May 26, 1953