Feb. 9, 1943. C. R. FORD 2,310,361

SYSTEM AND APPARATUS FOR PROPELLING BOATS

Filed Feb. 7, 1941 2 Sheets-Sheet 1

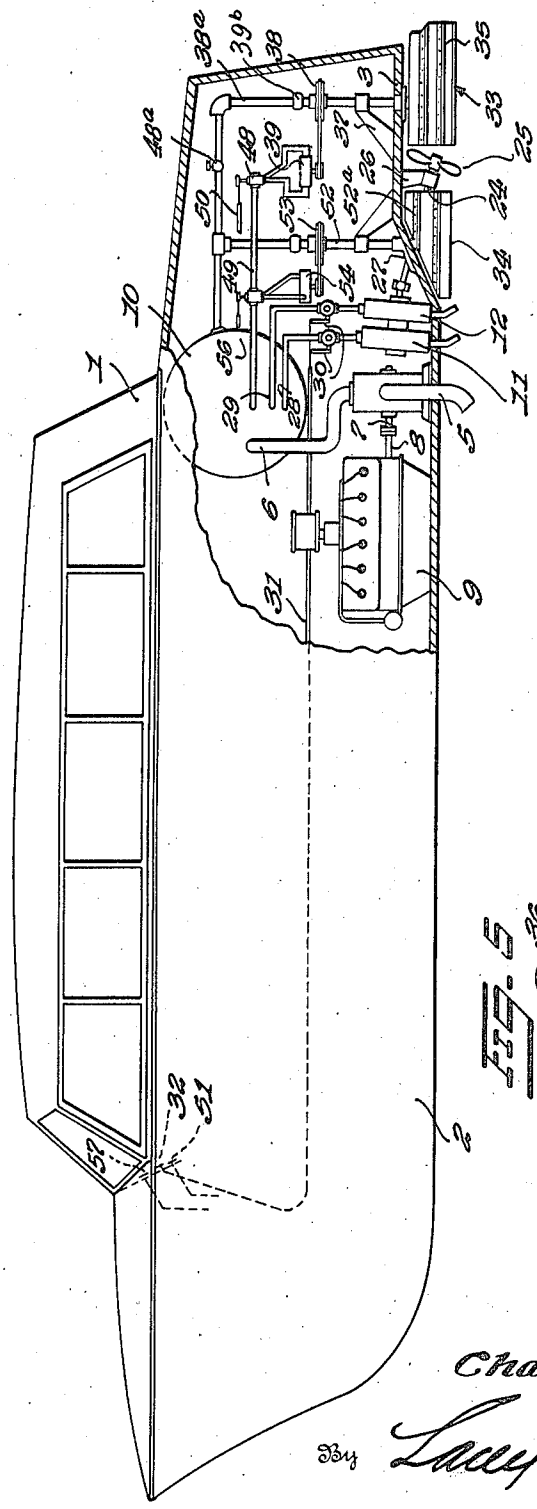

Fig. 1

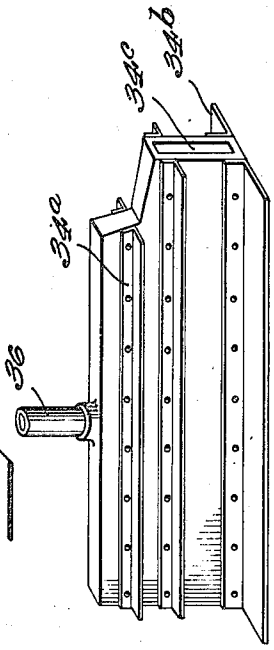

Fig. 5

Inventor
Charles R. Ford
By Lacey & Lacey,
Attorneys

Feb. 9, 1943. C. R. FORD 2,310,361

SYSTEM AND APPARATUS FOR PROPELLING BOATS

Filed Feb. 7, 1941 2 Sheets-Sheet 2

Fig. 2

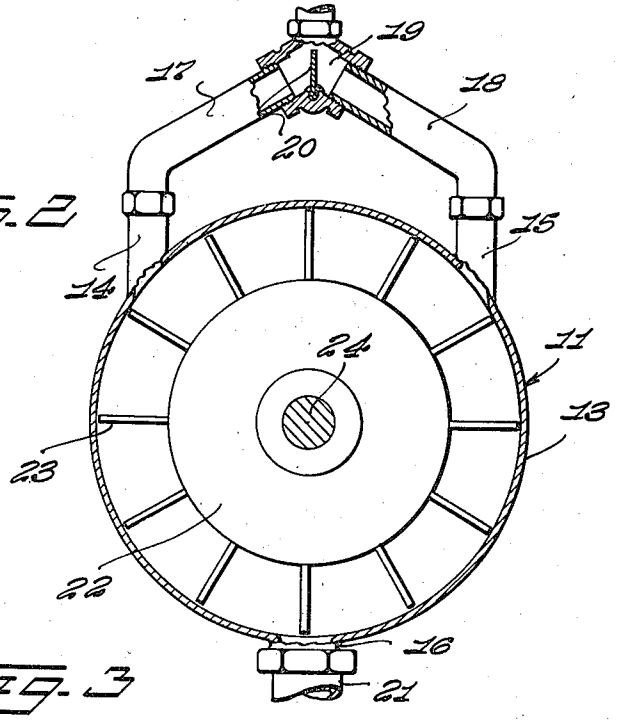

Fig. 3

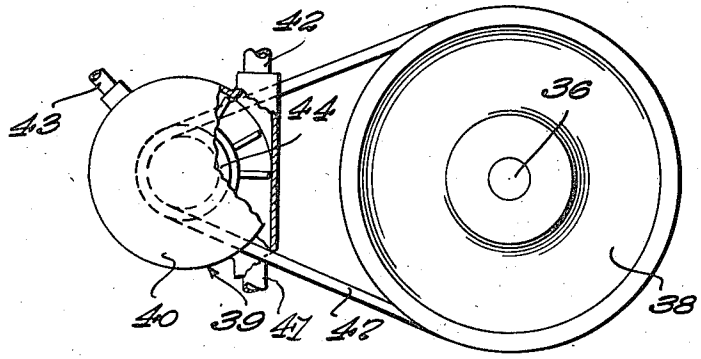

Fig. 4

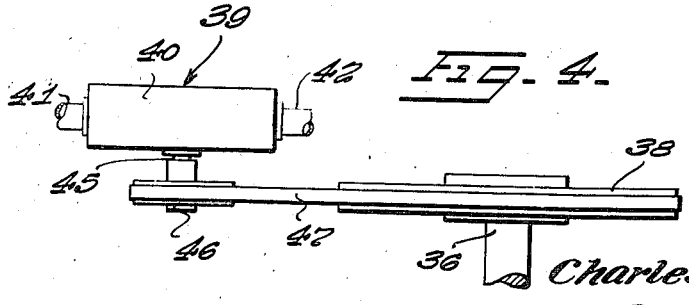

Inventor
Charles R. Ford

By Lacey & Lacey,
Attorneys

Patented Feb. 9, 1943 2,310,361

UNITED STATES PATENT OFFICE

2,310,361

SYSTEM AND APPARATUS FOR PROPELLING BOATS

Charles R. Ford, St. Louis, Mo.

Application February 7, 1941, Serial No. 377,903

3 Claims. (Cl. 115—34)

This invention relates to propulsion and, more particularly, to a system and apparatus for propelling boats.

One object of the invention is to provide a system and apparatus of this character which will be operative for propelling a boat and which will be simple in construction and highly efficient in operation.

Another object of the invention is to provide a system and apparatus for propelling boats embodying improved rudder structure which will be operative for greatly adding to the maneuverability of the craft.

A further object of the invention is to provide a system and apparatus for propelling boats employing turbines for driving the propeller, which turbines are driven by an even flowing stream of water from a pressure tank, the water in said pressure tank being pumped from the exterior of the boat and being maintained under constant and uniform pressure within the tank by said pump.

A still further object of the invention is to provide a system and apparatus of this character wherein all of the controls are mounted at a central point for convenient operation.

Still another object of the invention is to provide a system and apparatus of this character wherein am improved backing rudder is employed.

A further object of the invention is to provide, in another embodiment, a system and apparatus for propelling boats wherein a source of water under pressure is caused to operate a turbine and said turbine is caused to operate a generator for generating current to operate a motor for driving a propeller.

Another object of the invention is to provide a system and apparatus for propelling boats wherein improved means is employed for operating the rudders.

Other objects of the invention, not particularly mentioned hereinbefore, will become apparent during the course of the following description.

In the drawings:

Figure 1 is a side elevation, partly in section, disclosing a boat equipped with my improved system and apparatus for propulsion,

Figure 2 is an enlarged vertical sectional view, partly in elevation, of one of the driving turbines employed,

Figure 3 is an enlarged detail top plan view, partly in section, of one of the rudder controlling mechanisms,

Figure 4 is an enlarged detail side elevation of the mechanism shown in Figure 3, and

Figure 5 is an enlarged detail perspective view showing one of the rudders employed.

Referring now more particularly to the drawings, wherein like numerals of reference designate like parts throughout the views, the numeral 1 indicates in general a boat, which, for the sake of simplicity, is shown to be of the cabin cruiser class. It should be understood, of course, that my improved system and apparatus may be employed in conjunction with any type of boat. As a matter of fact, the invention lends itself particularly well for use for propelling river boats. The boat 1 includes a hull 2 having a stepped stern 3.

In carrying my invention into effect, I employ a pump 4 which is provided with an intake pipe 5 and a discharge pipe 6. The pump also includes a drive shaft 7. The pump 4 is shown to be of the centrifugal type. It should be understood, of course, that any suitable type of pump may be employed. The intake pipe 5 is projected through the bottom of the hull 2 and has its lower end turned forwardly. Suitable straining means will be employed within the pipe 5 to prevent entry of dirt, weeds or other objectionable matter into the pump. The shaft 7 is operatively connected with the drive shaft 8 of an engine 9, which engine is mounted on the floor of the hull forwardly of the pump. The engine 9 may be of the gasoline or Diesel type. If desired, a steam engine or an electric motor may be employed. The discharge pipe 6 of the pump 4 is connected with a tank 10 which is contained within the hull and is of a sufficient size to provide an adequate supply of water to the driving turbines to be described hereinafter. The tank 10 may, of course, be of any suitable shape, the shape and size depending to a great extent on the size of the boat and the size of the pumps and the turbines.

Mounted on the bottom of the hull 2 rearwardly of the pump 4 are driving turbines 11 and 12. Although two turbines are shown, it is obvious that any desired number of them may be used. The turbines 11 and 12 are of identical construction so that a description of one will suffice for both. The turbine 11 will be described. The turbine 11 includes a housing 13 which is of circular configuration and which is formed of heavy cast metal. The housing 13 includes intake necks 14 and 15 and an exhaust neck 16. Intake pipes 17 and 18 are, respectively, connected with the pipes 14 and 15 and with a distributor 19, said distributor having a selector valve 20 therein. The neck 16 is connected to an

outlet pipe 21 which extends through the bottom of the hull 2 and is bent to project obliquely rearwardly. Rotatably mounted within the housing 13 is a rotor 22 which is formed with blades 23. A drive shaft 24 is fixed to the rotor axially thereof and is extended through the hull beneath the under surface thereof. The shaft 24 carries a propeller 25.

It should be understood, of course, that, when more than one turbine is employed, as in the present disclosure, the shaft 24 will be common to the rotor of each turbine. Bearings 26 and 27 provide support for the shaft 24.

The distributors 19 are connected with the tank 10 by means of pipes 28 and 29. That is to say, the pipe 28 connects the tank 10 with the turbine 11 while the pipe 29 connects said tank with the turbine 12. In order to operate the selector valves 20, levers 30 are employed. Cables 31 connect these levers 30 with a control knob 32 at the control position within the boat. The operation of the selector valves 20 will be set forth in more detail during the description of the operation of the invention.

In further carrying my invention into effect, I employ a steering rudder 33 and a backing rudder 34. The steering rudder 33 is seen in perspective in Figure 5 and, as will be observed, is substantially rectangular in side elevation. The steering rudder 33 is formed with longitudinally extending outwardly projecting vertically spaced horizontal fins or angle irons 34a. At its bottom, the rudder 33 is provided with laterally extending relatively wide shoes 34b. The rudder 33 is hollow throughout its interior and is formed at its rear end with an outlet mouth 34c. The purpose of the hollow interior for the rudder and the outlet mouth therefor will be set forth in more detail hereinafter. The rudder 33 is mounted on a hollow stem or stalk 36 which is connected with the upper end of the rudder and which communicates with the hollow interior thereof. The stalk 36 extends upwardly through the stern 3, near the rear end thereof, and is supported by a supporting bearing 37. The stalk 36 carries a pulley 38 near its upper end. Connecting the upper end of the stalk 36 with the tank 10 is a pipe 38a. A slip joint 39b is connected between the pipe 38a and the stalk 36.

In order to shift the position of the rudder, the pulley 38 is turned for turning the stalk 36. Turning movement is imparted to the pulley 38 by means of a fluid motor 39. The fluid motor is best seen in Figures 3 and 4 of the drawings and includes a housing 40 having tangentially arranged intake pipes 41 and 42 and a discharge pipe 43. A rotor 44 is mounted within the housing 40 and is fixed to a shaft 45. Fixed on the shaft 45 is a pulley 46 and operatively connecting the pulley 46 to the pulley 38 is a belt 47. The pipes 41 and 42 are connected with a direction controlling valve 48 and said direction controlling valve is connected with the tank 10 by means of a supply pipe 49. A cable 50 connects the valve 48 with a control knob 51 at the control position within the boat.

The backing rudder 34 is, as best seen in Figure 1, of polygonal shape and includes an inclined rear wall. The backing rudder, like the steering rudder, is hollow throughout the major portion of its interior and is formed with an outlet mouth at its rear end. The backing rudder 34 is mounted beneath the stern 3 on a hollow stem or stalk 52. The backing rudder includes fins 52a which are similar to the fins 34a.

At the upper end of the stem 52 a pulley 53 is mounted. A motor 54, which is of identical construction with that of the motor 39 is employed for shifting the backing rudder 34. A valve 55, similar to the valve 48, controls the direction of flow of fluid within the motor and, thus, the direction of the swinging movement of the rudder 34. A cable 56 connects the valve 55 with a control knob 57 at the forward end of the boat.

The operation of my improved system and apparatus for propelling boats will now be described.

Let it first be assumed that the tank 10 is empty but that the system and apparatus is otherwise ready for use. The motor 9 is started with the result that the pump 4 will be placed in operation. The pump 4 will pump water from beneath the boat through the pipes 5 and 6 into the tank 10. As the tank is filled with water, air within the tank will cause the water to be maintained under a high degree of pressure. Continuous operation of the pump 4 will maintain this pressure uniform. If necessary, suitable check valves will be employed for preventing loss of pressure. After the tank has been filled to the proper level and it is desired to propel the boat forwardly in the water, each of the valves 20 is shifted from the intermediate position shown in Figure 2 to a position closing the pipe 17. Water under pressure will thus be allowed to pass through the pipes 18 of the turbines for rotating the rotors 22 and thus cause the rotation of the propeller in a clockwise direction. Rotation of the propeller will, of course, cause movement of the boat in the water.

With further reference to the selector valves 20, it should be noted that, when these valves are in intermediate position, as shown in Figure 2, water will flow through both the pipes 17 and 18 and will impinge on certain of the vanes at each side of the rotor. The pressure at each side of the rotor will thus be equal and the rotor will not move.

When it is desired to cause the boat to move in the opposite direction, it is only necessary to shift the valve 20 to positions closing the pipes 18. When this is done, water will flow through the pipes 17 and rotation of the rotors 22 in the opposite direction will take place. Rotation of the propeller 25 in a counter-clockwise direction will thus occur.

When it is desired to change the direction of movement of the boat, when it is moving forwardly in the water, it is only necessary to introduce fluid into either the pipe 41 or the pipe 42 of the motor 39, depending upon the direction in which the boat is to be turned. Fluid within the housing 40 will cause movement of the rotor 44 and thus movement of the pulley 46. It is to be noted that the pulley 46 is relatively small compared with the pulley 38 so that a relatively large amount of rotative movement of the pulley 46 will be needed to move the pulley 38 sufficiently to effect swinging of the rudder. A valve 48a in the pipe 38a is opened for admitting water under pressure into the hollow interior of the rudder 33. This water under pressure will, of course, discharge from the mouth 34c and will have the effect of assisting turning movement of the boat in the water. That is to say, the mouth 34c will serve as a jet for water under pressure, which will have a reactive effect and will, as stated, aid turning movement of the boat.

When the boat is moved rearwardly, water under pressure will be forced through the backing rudder so that said backing rudder will be permitted to operate in the same manner for assisting in turning the boat when the same is moving rearwardly.

My improved system and apparatus for propelling boats is characterized by the utmost simplicity in construction and operation. By the use of my system and apparatus the maneuverability of a boat will be greatly enhanced.

It should be understood that, in conjunction with large craft, more than one steering rudder will be employed. That is to say, a separate steering rudder and a backing rudder will be employed forwardly and rearwardly, respectively, of each propeller.

Attention is also directed to the fact that, if desired, suitable transmission mechanism may be employed in conjunction with the driving turbines. This transmission may be of the oil type commonly used in conjunction with some types of automobiles.

Having thus described the invention, what is claimed as new is:

1. A system and apparatus of the class described including, in combination with a boat having a hull, a pressure tank within the hull, a pump having a discharge pipe connected with the pressure tank, an inlet pipe for the pump, a motor for operating the pump for maintaining water at a constant uniform pressure within the pressure tank, a turbine having a rotor and a shaft, said shaft extending through the hull, a propeller on the shaft, said rotor provided with a housing having inlet necks and an exhaust neck, inlet pipes connected with the inlet necks, a distributor connected with the inlet pipes, a selector valve within the distributor, a pipe connecting the distributor with the pressure tank, and means for shifting the selector from a neutral position wherein water pressure is equalized at each side of the rotor to an operative position wherein water under pressure is introduced to the rotor at one side thereof for causing rotation of said rotor, shaft and propeller.

2. A system and apparatus of the class described comprising, in combination with a boat including a hull having a stern, a pressure hull within the tank, a pump for maintaining water under constant uniform pressure within the tank, means for operating the pump, a turbine having a shaft and a propeller, said shaft extending through the hull beneath the stern and said propeller being mounted on the shaft beneath the stern, a pipe connecting the turbine with the pressure tank, a valve movable from an inoperative position to a position admitting water under pressure into the turbine for rotating the shaft and propeller, a steering rudder, means mounting the steering rudder beneath the stern rearwardly of the propeller and in proximity thereto, a fluid motor, means connecting the fluid motor to the last mentioned means, a pipe connecting the fluid motor with the pressure tank, and a valve connected between the pipe and the fluid motor, said valve being operable for controlling water flow to the fluid motor for controlling movement of the steering rudder.

3. A system and apparatus of the class described including, in combination with a boat having a hull, a pressure tank within the hull, a pump for maintaining water under constant uniform pressure within the tank, a motor for operating the pump, a turbine having a shaft extending through the hull, a propeller on the shaft, a pipe connecting the turbine with the pressure tank and admitting water under pressure into the turbine for rotating the shaft and propeller, a steering rudder disposed rearwardly of the propeller, a backing rudder mounted forwardly of the propeller, fluid operated means connected with the pressure tank for changing the position of the steering rudder, and fluid operated means connected with the pressure tank for changing the position of the backing rudder.

CHARLES R. FORD.