(No Model.) 2 Sheets—Sheet 1.

E. REDMOND.

PICKET FENCE MACHINE.

No. 410,650. Patented Sept. 10, 1889.

Fig. 1

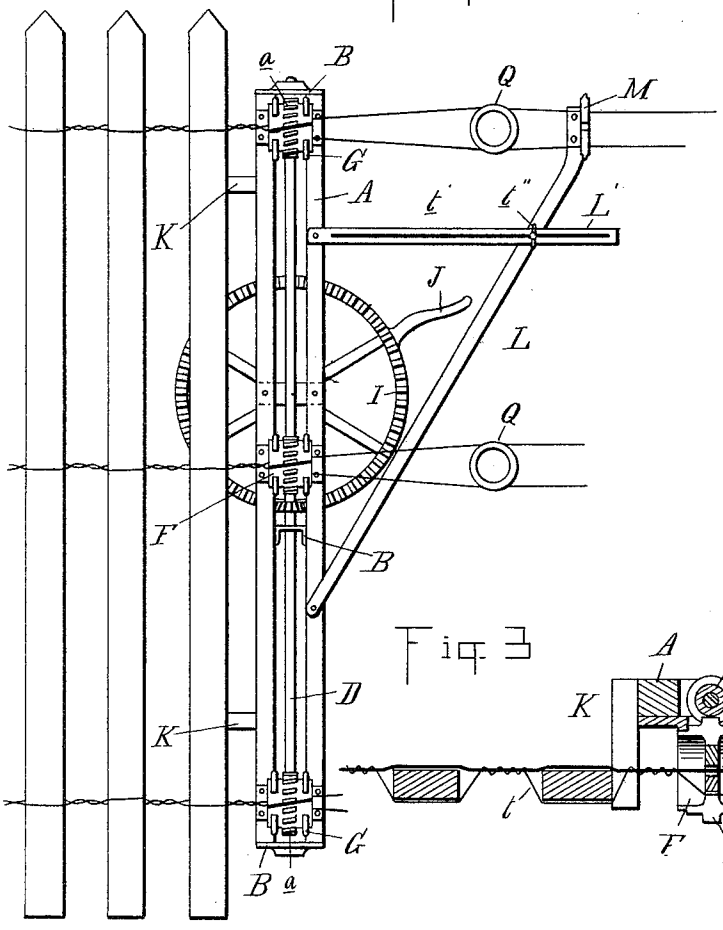

Fig. 3

Fig. 2

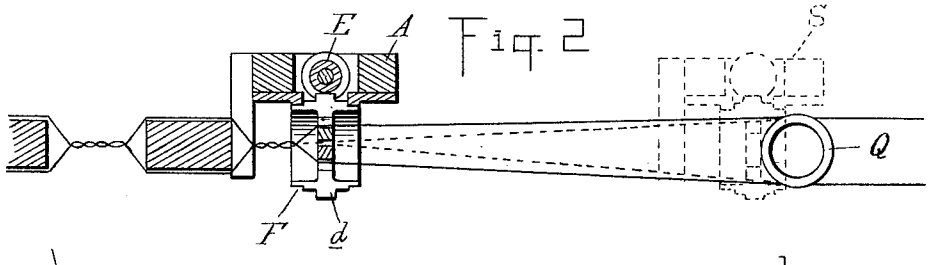

Witnesses:
P. M. Hulbert
Edm. Beauty

Inventor:
Edward Redmond
By. Mon. & Sprague & Son
Atty.

N. PETERS. Photo-Lithographer, Washington, D. C.

(No Model.) 2 Sheets—Sheet 2.

E. REDMOND.

PICKET FENCE MACHINE.

No. 410,650. Patented Sept. 10, 1889.

Fig 4

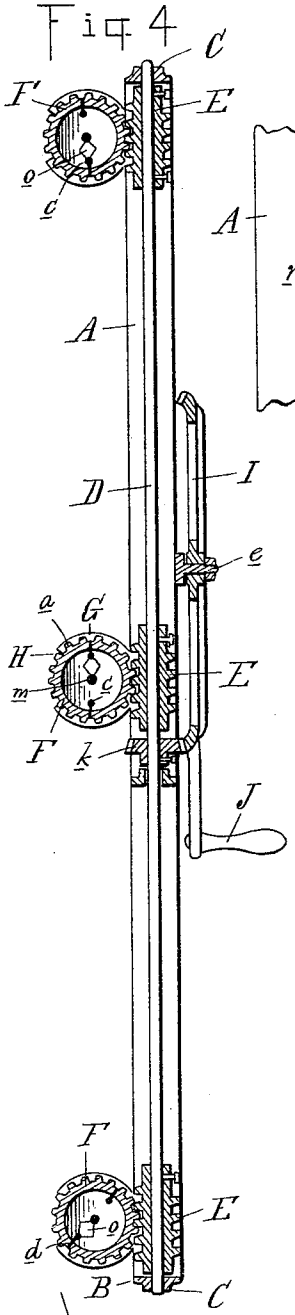

Fig 6

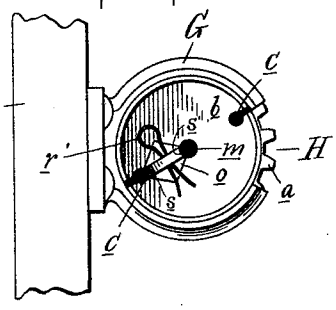

Fig 5

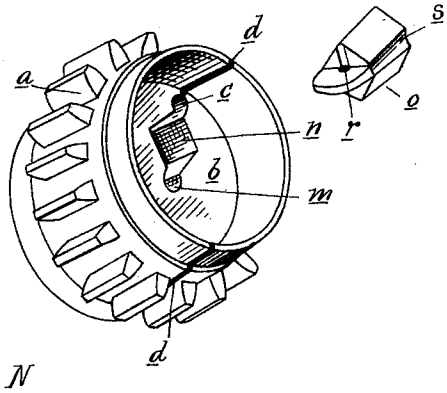

Fig 7

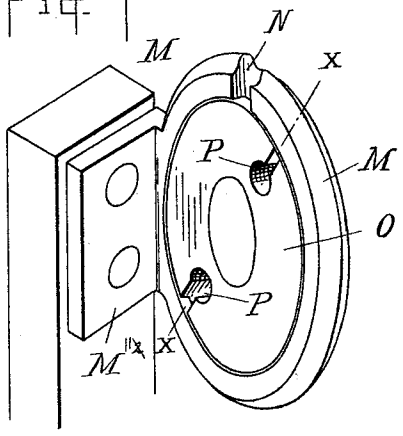

Fig 8

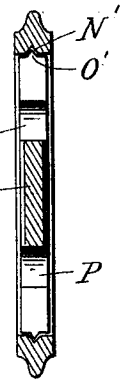

Fig 9

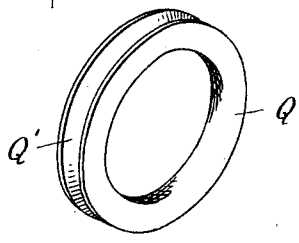

Witnesses:

P. M. Hulbert

Edmc Breatz

Inventor:

Edward Redmond

By Thos. G. Sprague & Son

Atty.

N. PETERS. Photo-Lithographer, Washington, D. C.

UNITED STATES PATENT OFFICE.

EDWARD REDMOND, OF PERRY, MICHIGAN.

PICKET-FENCE MACHINE.

SPECIFICATION forming part of Letters Patent No. 410,650, dated September 10, 1889.

Application filed May 27, 1889. Serial No. 312,272. (No model.)

To all whom it may concern:

Be it known that I, EDWARD REDMOND, a citizen of the United States, residing at Perry, in the county of Shiawassee and State of Michigan, have invented certain new and useful Improvements in Picket-Fence Machines, of which the following is a specification, reference being had therein to the accompanying drawings.

This invention relates to new and useful improvements in picket-fence machines; and the invention consists in the construction of the twister-wheels, whereby they may be used either for twisting both strands of the wire or using a straight wire and a binding-strand; further, in the construction of a guide-wheel and outrigger, and, further, in the construction of a spreader-wheel secured between the wires to hold them at all times a proper distance apart, so that the machine may be readily moved along in building the fence, all as more fully hereinafter described.

In the drawings which accompany this specification, Figure 1 is a side elevation of my improved machine as in use. Fig. 2 is a cross-section thereof through the upper twister-wheel. Fig. 3 is a similar section showing the use of the machine with a straight wire and a binding-wire. Fig. 4 is a vertical central section through the machine. Fig. 5 is a perspective view of one of the twister-wheels detached. Fig. 6 is a side elevation thereof in its bracket. Fig. 7 is a perspective view of the guide-wheel and bracket. Fig. 8 is a cross-section through the guide-wheel and bracket on line *x x*, Fig. 7. Fig. 9 is a perspective view of the spreader-wheel.

The frame of the machine consists of the two parallel side bars A A, connected at the top and bottom by the cross-bars B, which are preferably made of iron and centrally apertured to make bearings C for a vertical shaft D journaled therein. Upon this shaft are secured the worms E—one for each twister-spool.

F are rotary twister-spools journaled in suitable bearings G, which are secured to the frame in pairs and project laterally therefrom. Each bearing is preferably cast in one piece, and a portion of it is cut away to form an opening H, corresponding in each pair of brackets.

The twister-spools are cast hollow, and are provided between their bearings with suitable spurs *a*, adapted to engage with the worms E and with the heads *b*, in which are formed the wire-passages *c*, which passages extend outwardly and communicate with the oblique slots *d*, formed in the periphery of each twister-spool. To the outer face of the frame is secured the stub-shaft *e*, upon which is journaled the gear-wheel I, which is provided with a crank-handle J and engages with the pinion *k*, secured upon the shaft D.

In constructing my fence I preferably use a single straight heavy wire *l*, which passes through the center wire-passage *m* in each of the twister-wheels. This wire-passage connects by means of the aperture *n* with the oblique slot *d*, thus forming a continuous opening from the outside to the wire-passage *m*.

When the central wire has been secured in position in the wire-passage *m*, I secure a detachable plug *o* in the aperture *n* between the central wire-passage and the outer wire-passage *c*. This plug is preferably made tapering, and is provided with a key-hole *r*, in which a suitable key *r'* may be placed to secure the plug in position. The plug is preferably grooved at *s* and *s'* to form a complementary part of the circular wire-passages. In this construction of fence the eccentric wire-passage *c* carries the binding-wire *t*.

It is evident that in the construction of the device the machine will be slid along the main wire *l*, and that in twisting the binding-wire will be turned about the picket, securing it in position, as shown in Fig. 3.

K are bumpers secured at the rear of the machine to receive the thrust of the machine against the picket.

L is an outrigger consisting of two arms pivotally secured to the machine, the upper arm L' being provided with a slot *t'*, in which engages the set-screw *t''*. The manner of adjusting the outrigger up or down the necessary distance is obvious. At the upper end of the outrigger is secured a suit-

able bracket M, provided with an annular bearing M′, which is preferably cast in one piece with the body portion M″. The bearing has the cut-away portion N, and on its inner face is provided with a groove N′. The guide-wheel O is journaled in this bearing by means of an inverted-V-shaped rib O′ on its periphery.

To secure the parts together, the bearing M is made of suitable material to allow of a certain amount of spring, and it is sprung out sufficiently to allow of the engagement of the ribs O′ in the groove N′, when it is allowed to contract to its normal condition, the parts being of suitable dimensions to allow of the rib turning on the guide-wheel within the bearing. Suitable wire-passages P are provided for the passage of the wires, and they extend to the periphery of the guide-wheel.

The method of securing the machine upon the wire is well known, it being passed through the aperture on the periphery of the twister-wheels and guide-wheels, and engaged into the wire-passages in the wheels.

Q is a spreader-wheel, which is of slightly larger diameter than the space between the wire-passages in the twister-wheels, and is provided upon its circumference with a groove Q′. This spreader-wheel in practice is placed between the wires, as shown in Fig. 1, between the machine and the guide-wheel, the tension of the wires being sufficient to hold it in position. The function of this spreader-wheel is to keep the wires sufficiently spread apart and ahead of the machine to allow of its being moved forward more readily.

The dotted lines at S in Fig. 2 show the machine as it is being moved forward.

What I claim as my invention is—

1. In a wire-fence machine, a twister-wheel provided with the central wire-passage communicating with the slotted periphery, and a detachable plug secured between such central aperture and the periphery, substantially as described.

2. In a wire-fence machine, a twister-wheel provided with one or more eccentric wire-passages and a central wire-passage connecting with one of said eccentric wire-passages, and a detachable plug between said passages, substantially as described.

3. In a picket-fence machine, the combination, with a frame, twister-wheels journaled therein, and suitable gearing for driving the same, of an outrigger pivotally connected to said frame, a bracket provided with slotted annular bearing having a groove on its inner surface, and a guide-wheel secured in said bearing, substantially as described.

4. In a picket-fence machine, a wire-spreading device adapted to be slidingly secured by the tension of the wires in front of the machine, and consisting of a wheel having peripheral grooves, substantially as described.

In testimony whereof I affix my signature, in presence of two witnesses, this 1st day of February, 1889.

EDWARD REDMOND.

Witnesses:
J. PAUL MAYER,
P. M. HULBERT.