Dec. 29, 1964 B. A. BUSS 3,163,600

COVER INTERLOCK FOR A CENTRIFUGAL SEPARATOR

Filed Oct. 19, 1960

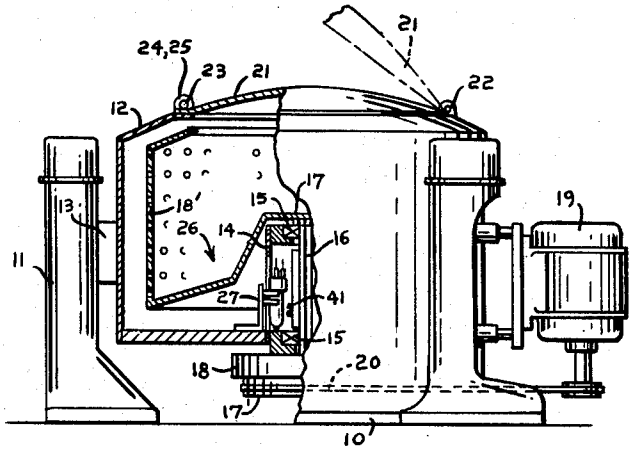

FIG. 1

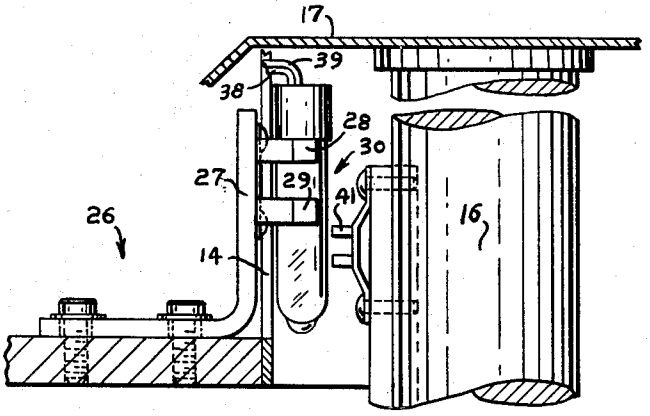

FIG. 2

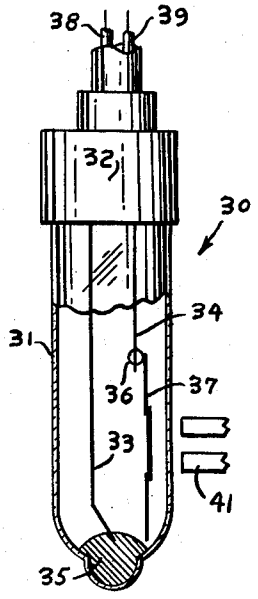

FIG. 3

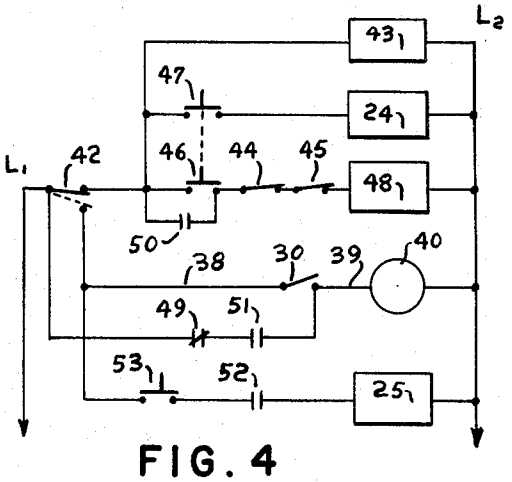

FIG. 4

INVENTOR
BENJAMIN ALVIN BUSS
BY.
Robertson & Smythe
ATTORNEYS

United States Patent Office 3,163,600
Patented Dec. 29, 1964

3,163,600

COVER INTERLOCK FOR A CENTRIFUGAL SEPARATOR

Benjamin Alvin Buss, East Moline, Ill., assignor to Ametek, Inc., East Moline, Ill., a corporation of Delaware

Filed Oct. 19, 1960, Ser. No. 63,534
3 Claims. (Cl. 210—146)

The present invention relates to centrifugal separators, and particularly to a new and improved cover interlock therefor that is automatically actuated by the rotation of the basket of the centrifugal.

In the operation of centrifugal separators, unloading usually requires the opening of a cover that closes the housing within which the basket of the centrifugal rotates. Opening of this cover while the basket is spinning can subject the operator to danger. Accordingly, it is desirable to insure that this cover cannot be opened until the basket has stopped rotating, or is rotating at only a few revolutions per minute.

An object of this invention is to provide a cover interlock that is responsive to the sped of rotation of the basket of the centrifugal.

Another object of this invention is to provide such an interlock that is electrically controlled by a switch that is responsive to the speed of rotation of the basket of the centrifugal.

Still another object of this invention is to provide such an interlock in which a mercury switch is employed that does not depend upon the movement of the mercury within the switch to effect the making and breaking of an electrical circuit.

Another object of the invention is to provide such an interlock for the cover of a centrifugal separator in which a rod may be caused to move into interlocking position with said cover by the energization of a solenoid and moved to a noninterlocking position by the energization of another solenoid, the latter being controlled by a mercury switch having a stationary pool of mercury and electrode means that is responsive to the rotation of the basket of the centrifugal.

In one aspect of the invention, a reciprocable rod may be mounted within a bearing on the housing of a centrifugal adjacent the cover thereof, and in a location such that in one of its positions it will not interfere with the cover, and in another position it will overlie a portion of the cover and prevent opening of the cover.

In another aspect of the invention, separate solenoids may be associated with the interlocking rod so that energization of one of the solenoids forces the rod into interlocking position with the cover, and energization of the other solenoid forces the rod to a position releasing the cover.

In still another aspect of the invention, a mercury switch may be stationarily mounted adjacent the spindle of the centrifugal basket and may include an electrode immersed within a pool of mercury and a second electrode that is pivotally mounted but resiliently maintained in a position out of contact with the pool of mercury.

In another aspect of the invention, a magnet may be fixed to the rotatable spindle supporting the basket of the centrifugal such that as it passes the stationary mercury switch, it will repel the pivotally mounted electrode to force it into the pool of mercury, but only when the spindle is rotating at a relatively slow speed, so slow that it is safe for an operator to open the cover of the centrifugal.

In still another aspect of the invention, a circuit may be provided that will retain the energization of the solenoid that retracts the interlocking rod from the cover of the centrifugal once the mercury switch has been closed and after the magnet passes the mercury switch as it continues to rotate at a predetermined, relatively slow, safe speed.

The above, other objects and novel features of the invention will become apparent from the following specification and accompanying drawing which is merely exemplary.

In the drawing:

FIG. 1 is a partial sectional elevational view of a centrifugal separator to which the principles of the invention have been applied;

FIG. 2 is an enlarged sectional view of a portion of the apparatus shown in FIG. 1;

FIG. 3 is a detail view of the mercury switch; and

FIG. 4 is a wiring diagram embodying the principles of the invention.

Referring to the drawings, and particularly to FIG. 1, the principles of the invention are shown as applied to a centrifugal separator including a base plate 10 to which are fixed supporting standards 11 at three equiangularly spaced points. An outer housing 12 may have a plate 13 attached to its outer side wall at each of the three locations of the standards 11, and these plates may extend into a recess within each of said standards. A chain support (not shown) within the standards 11 may be connected to the plates 13 in a manner to permit a slight turning of the housing due to the rotary movement of the material within the housing 12 that is being treated.

The housing 12 may include an inner cylindrical wall 14, on the inner surface of which may be mounted bearings 15 within which a spindle 16 is rotatably mounted. A basket 17 having a perforated wall 18' may be attached to the upper portion of the spindle 16, and the lower end of spindle 16 may have a drive pulley 17' fixed to it as well as a brake 18 for stopping the spindle. A motor 19 may be mounted in a manner to drive the pulley 17' through a belt 20 or other means.

A cover 21 may be connected to the housing 12 by hinge means 22 for permitting access to the interior of the basket 17 for loading and unloading purposes. In order to insure that the cover 21 may not be opened until the basket 17 is rotating at a safe slow speed or has stopped, interlocking means is usually employed. Such means may include an interfering rod 23 that may be mounted for reciprocation within a bearing located on the top of the housing 12 in a position so that rod 23 may overlie a portion of the cover 21 in its extended position and may clear cover 21 in its retracted position. In the embodiment disclosed, the rod 23 may be reciprocated by the energizing and de-energizing of solenoid means 24 and 25 (FIG. 4).

The inner wall 14 of housing 12 may have a recess formed in it, and a bracket 26 may be fixedly mounted to the bottom of the housing 12 with a leg 27 thereof extending upwardly over a portion of the recess. Referring to FIG. 2, spring clips 28 and 29 may be attached to the leg 27 for releasably holding a mercury switch 30. Referring to FIG. 3, the mercury switch 30 may comprise a glass envelope 31 that is closed at the top by an insulating element 32 in which two electrodes 33 and 34 are mounted. The electrode 33 extends downwardly within the envelope 31, and the bottom tip thereof is immersed in a pool of mercury 35. The electrode 34 includes a pivot 36 to which is hinged a portion 37, the lower tip end of which is normally resiliently urged to the position shown in FIG. 3 where it does not make contact with the pool of mercury 35. Conductors 38 and 39 are respectively connected to the electrodes 33 and 34 and are wired into a circuit including a relay 40 (FIG. 4) for a purpose to be described later.

Referring again to FIG. 2, a small permanent magnet 41 may be fixed to the rotatable spindle 16. The construction and arrangement of the mercury switch 30 and the magnetic flux of the magnet 41 are such that the magnet has no effect on the portion 37 of electrode 34 when the spindle 16 is rotating above a predetermined relatively slow speed below which the cover 21 may be opened without danger to an operator. However, below this relatively slow speed, the magnet 41 will repel the portion 37 of electrode 34, forcing it into the pool of mercury 35 and thereby making a circuit through switch 30. Of course, the portion 37 may normally contact the pool of mercury 35, in which case a corresponding change in the circuit of relay 40 is necessary.

Referring to FIG. 4, with the circuit in the condition shown, current flows from L_1 through a stop switch 42, thence through a solenoid 43 to line L_2. Energizing solenoid 43 causes the release of brake 18. With the cover 21 closed, a limit switch 44 is closed, and with the brake released, limit switch 45 is closed. Consequently, closing start switch 46 which is tied to switch 47 causes energization of solenoid 24, thereby moving rod 23 over a portion of cover 21 to prevent its being opened. Closing switch 46 energizes the motor starter solenoid 48, thereby starting the rotation of motor 19 (FIG. 1) and the consequent rotation of the basket 17. Energizing solenoid 48 also opens normally closed switch 49 and closes normally open switch 50 which latter acts as a holding switch for the motor solenoid 48 upon release of switch 46. Solenoid 24 does not require a holding circuit since its de-energization will not affect the interlocked position of rod 23.

The basket 17 is caused to rotate at a speed or speeds to effect the desired centrifuging action. When it is desired to stop this action, stop switch 42 is moved from its solid line to its dotted line position. This de-energizes the motor starter solenoid 48 as well as the brake solenoid 43. Consequently, the motor 19 is de-energized and the brake 18 is applied to the spindle 16.

When spindle 16 has slowed down to a safe speed, magnet 41 acts on the portion 37 of electrode 34, thereby closing switch 30 and energizing the relay 40. Energizing relay 40 closes normally open contacts 51 and 52. Closing contacts 51 provides a holding circuit for relay 40 through contacts 49 which are closed since motor starter solenoid 48 is de-energized. This holding circuit is necessary since the switch 30 will open and close as the magnet 41 passes it during each revolution of shaft 16 below the predetermined relatively slow speed above referred to.

Closing contacts 52 sets up a circuit for the solenoid 25 through a manual push button switch 53. Accordingly, when the operator desires to open cover 21, and with the above desired conditions prevailing, upon closing of switch 53 solenoid 25 is energized which retracts rod 23 from interlocking position with cover 21, and the latter may then be opened with safety.

Although the various features of the new and improved interlocking mechanism for centrifugal separators have been shown and described in detail to fully disclose one embodiment of the invention, it will be evident that changes may be made in such details and certain features may be used without others without departing from the principles of the invention.

What is claimed is:

1. In an extractor having a stationary housing and a rotating basket therein, an openable cover on said housing for access to said basket, the improvement comprising an interlocking means for said cover having open and closed positions, separate solenoids for opening and closing said interlocking means upon a manual signal, an interlock circuit means including said opening solenoid and a switch mounted on said stationary housing and operable to actuate said opening solenoid by a predetermined magnetic flux, a magnetic flux producing device mounted on said rotatable basket, and means for mounting said device to have the magnetic field thereof actuate said switch at a predetermined low safe rotating speed of said basket.

2. In an extractor having a stationary housing and a rotating basket therein, an openable cover on said housing for access to said basket, the improvement comprising an interlocking means for said cover having open and closed positions, separate solenoids for opening and closing said interlocking means upon a manual signal, an interlock circuit means including said opening solenoid and a mercury switch mounted on said stationary housing and operable to actuate said opening solenoid by a predetermined magnetic flux, a permanent magnet mounted on said rotatable basket, and means for mounting said magnet to have the magnetic field thereof actuate said switch at a predetermined low safe rotating speed of said basket.

3. In an extractor having a stationary housing and a rotating basket therein, an openable cover on said housing for access to said basket, the improvement comprising an interlocking means for said cover having open and closed positions, separate solenoids for opening and closing said interlocking means upon a manual signal, an interlock circuit means including said opening solenoid and a mercury switch mounted on said stationary housing and operable to actuate said opening solenoid by a predetermined magnetic flux, said mercury switch having one contact thereof movable under the influence of a magnetic flux, a permanent magnet mounted on said rotatable basket, means for mounting said magnet to have the magnetic field thereof actuate said switch at a predetermined low safe rotating speed of said basket.

References Cited in the file of this patent

UNITED STATES PATENTS

1,837,244	Watson	Dec. 22, 1931
2,187,369	Uehling	Jan. 16, 1940
2,235,988	Frohwitter	Mar. 25, 1941
2,844,239	Batson et al.	July 22, 1958