No. 890,153. PATENTED JUNE 9, 1908.

J. G. MASTIN.

FIRE EXTINGUISHER.

APPLICATION FILED NOV. 11, 1907.

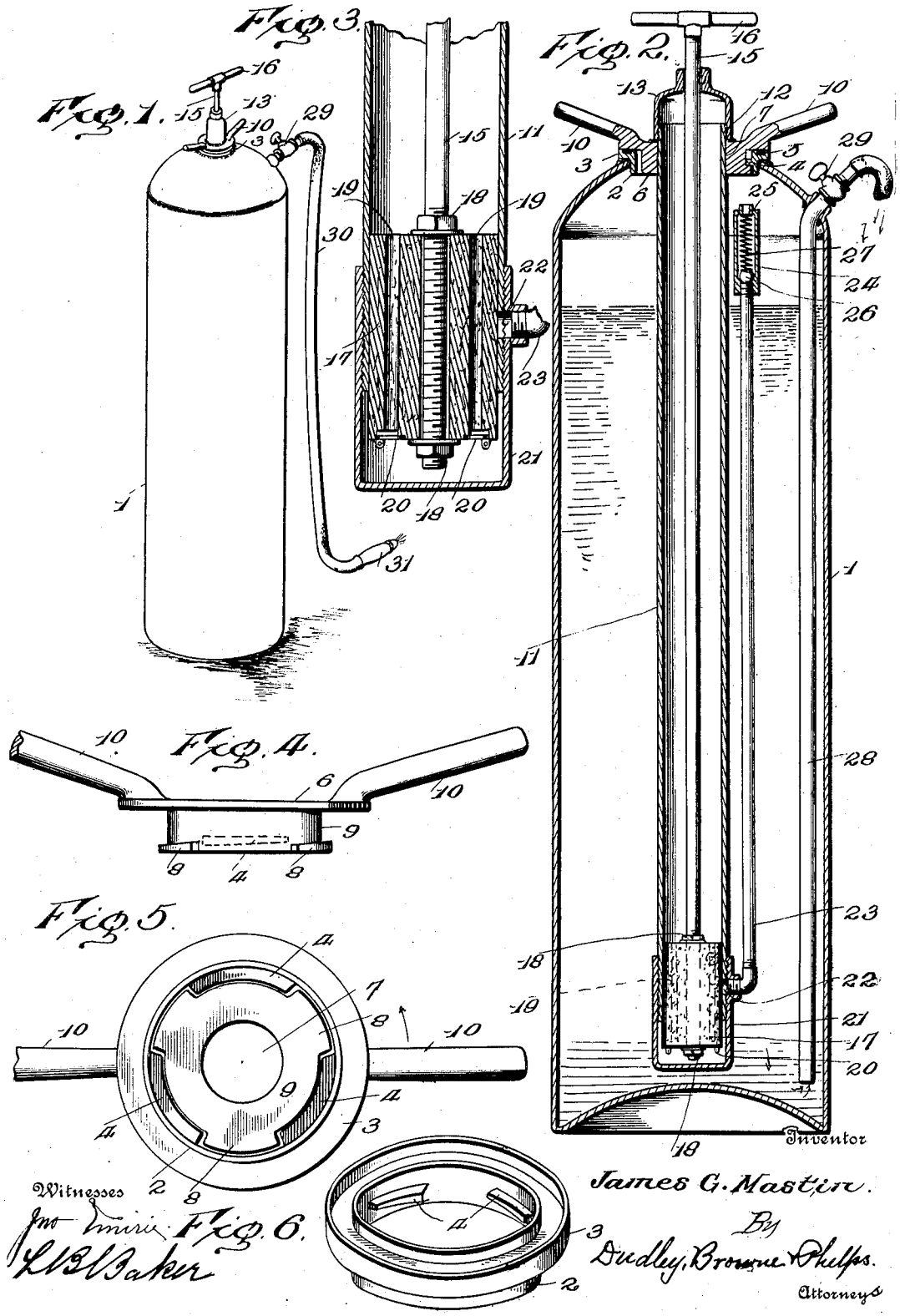

UNITED STATES PATENT OFFICE.

JAMES G. MASTIN, OF CHICAGO, ILLINOIS.

FIRE-EXTINGUISHER.

No. 890,153. Specification of Letters Patent. Patented June 9, 1908.

Application filed November 11, 1907. Serial No. 401,602.

To all whom it may concern:

Be it known that I, JAMES G. MASTIN, citizen of the United States, residing at Chicago, in the county of Cook and State of Illinois, have invented certain new and useful Improvements in Fire-Extinguishers, of which the following is a specification.

My invention relates to certain new and useful improvements in fire extinguishers, and the object of my invention is to produce a device of this character which is simple in construction, composed of few parts and not liable to get out of order.

With these and other objects in view my invention consists in certain constructions, combinations and arrangements of parts the preferred form of which will be first described in connection with the accompanying drawing and then the invention particularly pointed out in the claims.

Referring to the drawings wherein I show the preferred form of my invention and wherein the same part is designated by the same reference numeral wherever it occurs, Figure 1 is a perspective view of an apparatus embodying my invention; Fig. 2 is a central longitudinal section of the same with certain parts shown in elevation; Fig. 3 is a detail sectional view of the lower end of the pump barrel and piston; Figs. 4, 5 and 6 are perspective views of the device for removably supporting the pump barrel in position.

1 designates the container or casing in the upper end of which is secured the ring 2 having the flange 3 projecting from the central portion thereof and upon the inner surface of the ring are the cam plates 4 spaced apart as shown.

5 designates a rubber gasket or washer supported in the depression formed between the flange 3 and the ring 2.

6 designates a plate provided with a central opening 7 and on its under side is provided with the projection 9 which carries the projecting cam plates 8 separated from each other a distance equal to the length of the cam plates 4. On its upper surface the plate 6 is provided with the handles 10. The size of the body portion of the plate 6 is such that it may be passed into the opening in the ring 2, so that when the cam plates 8 are properly positioned in relation to the cam plates 4 the cam plates 8 can pass below the plates 4, and then upon the rotation of the plate 6, by the handles 10, the parts lock together, the gasket 5 operating to form a tight joint between them. Through the opening 7 in the plate 6 extends the pump barrel 11, and the pump barrel extends slightly above the plate, and at its upper end is screw threaded as is shown at 12.

13 is a cap which is adapted to be screw threaded on to the end of the barrel, and at its top is bored at 14 to form a guide for the piston rod 15, provided with the operating handle 16 at its upper end. The rod 15 carries at its lower end the piston 17 which is preferably formed of a piece of rubber or similar material cut to proper size, and secured on to the lower end of the piston rod by means of the nuts 18.

19 are perforations extending through the piston and at their lower ends are provided with flap valves 20 of any ordinary construction.

21 is a cap adapted to be screwed on to the lower end of the barrel 11 to close the same.

22 is an opening tapped through the cap 21 and the barrel 17, a short distance above the lower end of the cap. In the opening 22 is secured a pipe 23 on to the upper end of which is screw threaded a sleeve 24 having a reduced upper end 25.

26 is a ball formed of rubber or similar material and is adapted to act as a valve to close the upper end of the pipe 23. The ball is held to its seat by means of the spring 27. The pipe 23 extends up beside the barrel 11, so close thereto as to enable the barrel and pipe to be removed through the opening in the ring 2.

28 is a pipe passing through the upper portion of the casing 1 and extending down nearly to the bottom. This pipe outside the casing is provided with a valve 29, and 30 is a hose connected to the pipe and carrying at its outward end a nozzle 31.

In the operation of this invention the container 1 is filled by removing the plate 6 together with the pump, and then filling the container with fire extinguishing or other liquid. The pump is then inserted in the opening in the ring 2 and the plate 6 locked in position by the engagement of the cam plates 4 and 8 as previously described. Upon the up stroke of the piston the flap valves 20 open, permitting air to pass below the piston, the ball valve 26 preventing the exhaustion of the air in the container. Upon the down stroke of the piston the air is forced into the container, putting the liquid therein under pressure. It will be noted that the

piston is adapted to pass below the opening 22, so that the piston, when in its lowest position, acts as a valve to close this opening, so that even should there be a leak past the ball 26 the pressure in the casing will not be reduced. Upon opening the cock 29 the flow of the liquid through the nozzle 31 will be maintained as long as the pressure is kept up in the container.

While I have described what I believe to be the preferred form of my invention, I desire to have it understood that many changes may be made in the form, construction and arrangement of parts without departing from the spirit thereof.

What I claim as new and desire to secure by Letters Patent is

1. In a fire extinguisher, the combination with an outer casing for containing the extinguishing compound, of an inner casing removably mounted therein and comprising a pump barrel, a piston movably mounted within said second casing, a pipe connected to said second casing near its lower end and terminating at its upper end near the top of said second casing, a valve at the upper end of such pipe, and a delivery pipe located adjacent to the wall of the outer casing and provided with a valve at its end which extends through said casing.

2. In a fire extinguisher, the combination with a casing, of a ring mounted upon the upper side of the casing and provided with an opening therethrough, cam plates spaced apart and secured to the inner surface of the ring and projecting into the opening, a plate provided on its lower side with projecting cam plates adapted to coöperate with the first mentioned cam plates to lock the plate over the opening in the ring, said plate being also provided with an opening, a pump barrel mounted in the opening, a piston in said pump, a pipe connected near the lower end of said barrel and extending nearly to the top of the casing and a valve at the upper end of said pipe, the opening through the ring being of such a size in relation to the pump barrel and pipe that the pump barrel and pipe may be removed therethrough.

In testimony whereof I affix my signature in presence of two witnesses.

JAMES G. MASTIN.

Witnesses:
HELEN M. WHEELER,
FRANK S. GOLL.