G. B. SMITH.

MACHINE FOR TWISTING WIRE.

APPLICATION FILED NOV. 10, 1916.

1,257,036.

Patented Feb. 19, 1918.

3 SHEETS—SHEET 1.

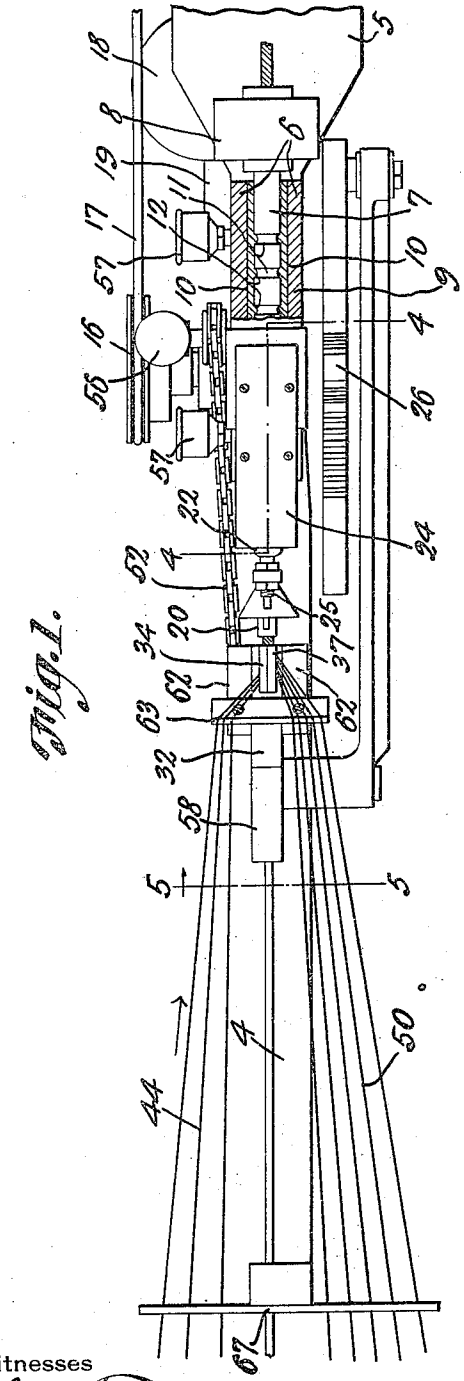

Fig. 1.

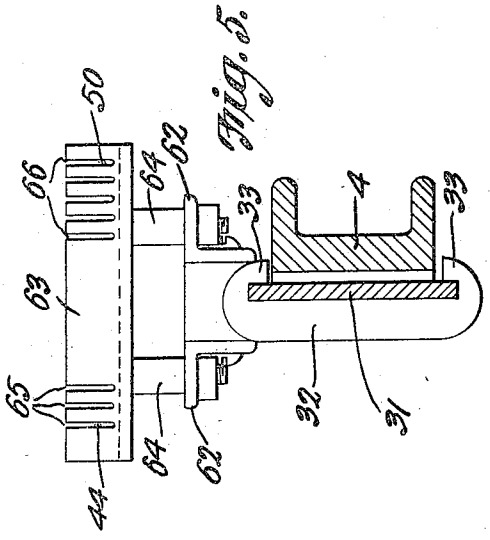

Fig. 3.

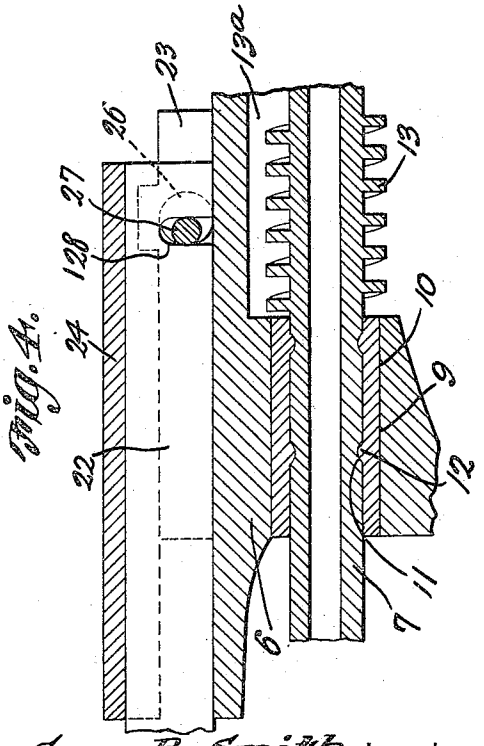

Fig. 4.

Witnesses

J. R. Dawley

R. L. Parker.

Gary B. Smith Inventor

by Church & Co.

Attorneys

G. B. SMITH.

MACHINE FOR TWISTING WIRE.

APPLICATION FILED NOV. 10, 1916.

1,257,036.

Patented Feb. 19, 1918.

3 SHEETS—SHEET 2.

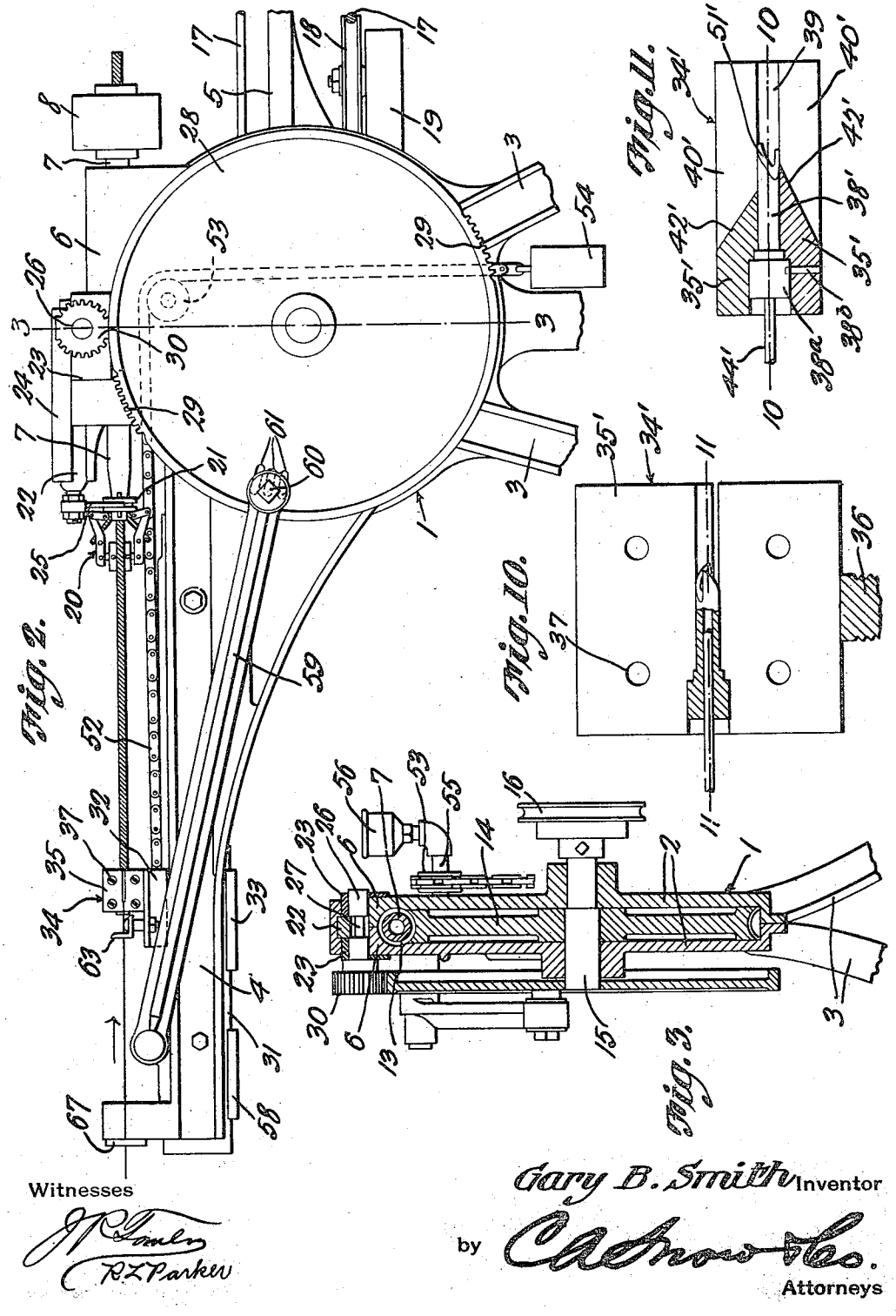

Witnesses

J. P. Fowler

R. Z. Parker

Gary B. Smith Inventor

by Church & Co.

Attorneys

G. B. SMITH.

MACHINE FOR TWISTING WIRE.

APPLICATION FILED NOV. 10, 1916.

1,257,036.

Patented Feb. 19, 1918.

3 SHEETS—SHEET 3.

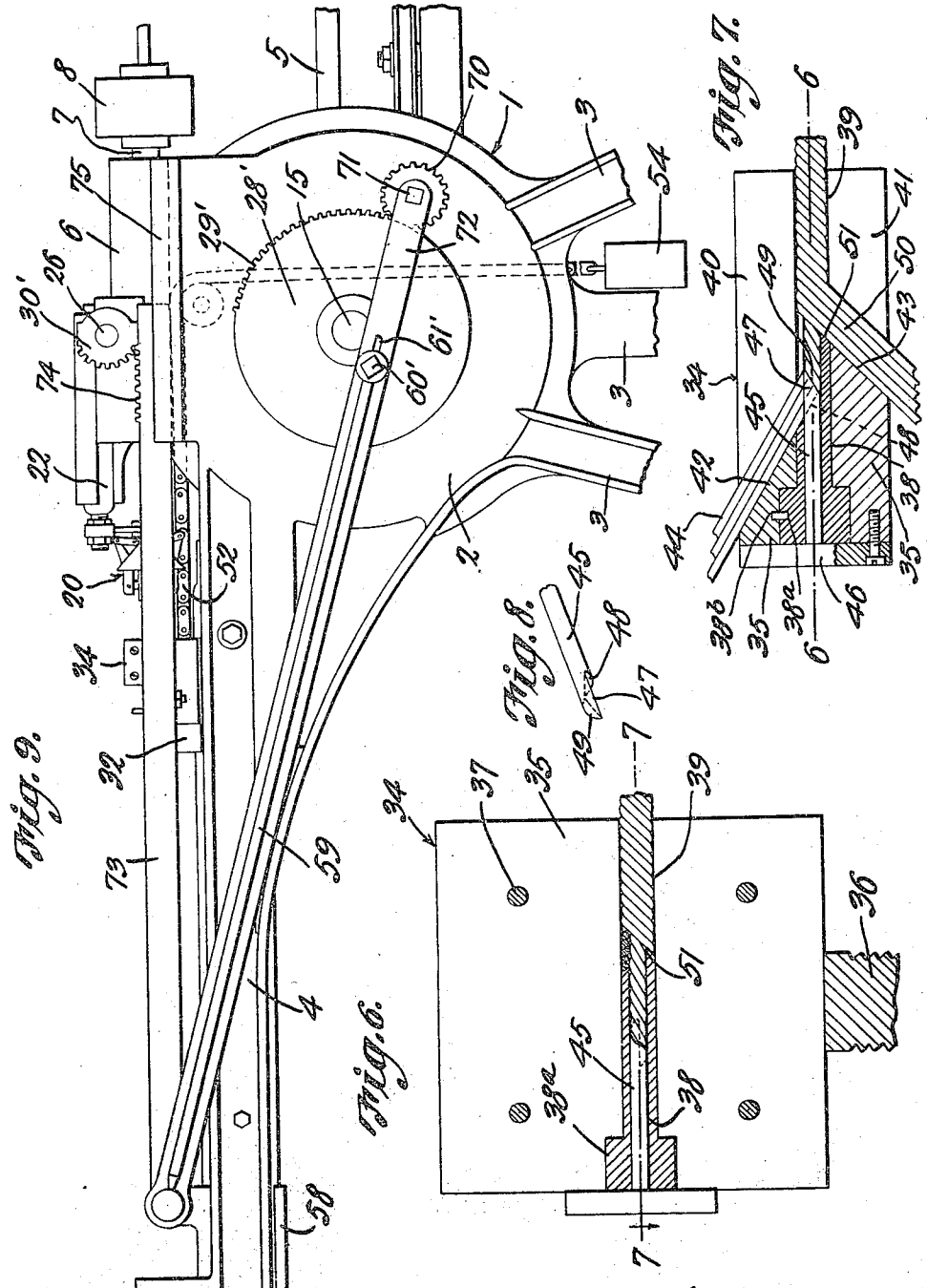

Fig. 9.

Fig. 7.

Fig. 8.

Fig. 6.

Witnesses

J. C. Fowler

R. L. Parker.

Gary B. Smith Inventor

by C. A. Snow & Co.

Attorneys

UNITED STATES PATENT OFFICE.

GARY B. SMITH, OF CHICAGO, ILLINOIS.

MACHINE FOR TWISTING WIRE.

1,257,036. Specification of Letters Patent. **Patented Feb. 19, 1918.**

Application filed November 10, 1916. Serial No. 130,599.

To all whom it may concern:

Be it known that I, GARY B. SMITH, a citizen of the United States, residing at Chicago, in the county of Cook and State of Illinois, have invented a new and useful Machine for Twisting Wire, of which the following is a specification.

The present invention appertains to wire twisting machines, and is an improvement in the wire twisting machine disclosed in my Patent No. 1,165,550, granted December 28, 1915, and employing, generally considered, a rotatable twisting chuck, a wire applying device, and automatic means for operating the chuck as the chuck and wire applying device are moved relatively toward and away from one another, whereby the wire is alternately twisted and the twisted portion discharged.

It is the object of the invention to provide a wire twisting machine of the character indicated embodying novel and improved features of construction to enhance the utility, operation and efficiency of the machine.

Another object of the invention is the provision of novel means for guiding and applying the strands to provide the twisted wires and covering.

With the foregoing and other objects in view which will appear as the description proceeds, the invention resides in the combination and arrangement of parts and in the details of construction hereinafter described and claimed, it being understood that changes in the precise embodiment of the invention herein disclosed can be made within the scope of what is claimed without departing from the spirit of the invention.

The invention is illustrated in the accompanying drawings, wherein:—

Figure 1 is a plan view of the machine, portions being broken away.

Fig. 2 is a side elevation of the machine.

Fig. 3 is a vertical section taken on the line 3—3 of Fig. 2.

Fig. 4 is an enlarged longitudinal section taken on the line 4—4 of Fig. 1.

Fig. 5 is an enlarged cross section taken on the line 5—5 of Fig. 1.

Fig. 6 is a vertical section on an enlarged scale, of the wire or strand guiding and applying device, this view being taken on the section line 6—6 of Fig. 7.

Fig. 7 is a sectional view taken on the line 7—7 of Fig. 6.

Fig. 8 is a perspective view illustrating the end of the pin for twisting and guiding the core strands or wires.

Fig. 9 is a view similar to Fig. 2 illustrating a modification.

Fig. 10 is a view simialr to Fig. 6, taken on the line 10—10 of Fig. 11, illustrating a modified form of wire guiding and applying device.

Fig. 11 is a section on the line 11—11 of Fig. 10.

In carrying out the invention, a special frame is employed, the same embodying a circular relatively flat casing 1 disposed in a vertical plane with its axis horizontal, and composed of side plates or sections 2 having their peripheries clamped together in any suitable manner. The casing 1 is provided with supporting legs 3, and a bracket 4, preferably integral with the casing, projects horizontally therefrom in the plane of the casing or substantially so. At that side of the casing opposite the bracket 4, there is provided a bracket 5, preferably integral with the casing, for supporting an electric motor or the like. to operate the machine in the manner disclosed in said patent, if this is desired. The upper portion of the plates 2 of the casing have the members 6 disposed against one another and in which the horizontal longitudinal tubular shaft 7 is journaled. That protruding end of the shaft 7 remote from the bracket 4 can have a pulley wheel 8 secured thereon for operating the shaft, although the shaft can be rotated by a motor supported by the bracket 5, or in any other suitable manner.

As a means for journaling the shaft 7 within the portions 6, said portions are provided with a longitudinal bore 9 provided with a lining 10 of babbitt-metal or equivalent material, the babbitt-metal being divided in the plane of division between the plates or sections 2 to permit of the separation of said plates and the removal of the shaft 7 for cleaning, repairs, or the like. The shaft 7 is provided at various points thereof with annular grooves 11 receiving annular ribs 12 of the babbitt-metal 10, whereby an effective end thrust bearing is provided for the shaft 7.

Secured upon the shaft 7 within a chamber 13ª with which the members or portions 6 are provided, is a worm 13 which meshes with the upper portion of a worm wheel 14

rotatable within the casing 1 between the side plates 2 thereof, as clearly seen by reference to Fig. 3. The worm wheel 14 is keyed upon a transverse horizontal shaft 15 journaled through the plates 2, and as the shaft 7 rotates at a relatively high speed, the worm wheel 14 and shaft 15 will be rotated at a slower velocity.

A pulley wheel 16 can be secured to one end of the shaft 15 for operating a belt 17 that operates a device for taking up the twisted wire as it is discharged from the machine, which will be obvious by referring to said patent. The belt 17 passes around a pulley wheel 18 rotatable about a vertical axis and carried by a bracket 19 with which the casing 1 is provided below the bracket 5.

A twisting chuck 20 of any suitable character is carried by the forward protruding end of the shaft 7, and which chuck can be of the construction disclosed in said patent or of any other suitable construction, the details of the chuck not entering into the present invention. This chuck is operated by a collar 21 slidable longitudinally, which in being slid in one direction will cause the jaws of the chuck to grip the twisted wire, whereas when the collar is shifted in the opposite direction, the jaws will be released. In order to automatically operate the chuck, there is provided a longitudinally slidable bar 22 mounted for sliding movement upon the members 6 and between plates 23 secured to the sides of said members, a cap plate 24 being secured upon the plates 23 to hold the bar 22 in place, and to enable said bar to be removed when the cap plate is detached. A member 25 secured to the forward end of the bar 22 is connected to the collar 21 to shift said collar longitudinally with the bar 22, and a shaft 26 is journaled through the plates 23 for reciprocating the bar 22. This shaft 26 has an eccentric or crank portion 27 received by a downwardly opening slot 128 with which the bar 22 is provided, in order that when the shaft 26 is rotated, reciprocatory movement will be imparted to said bar. The slot 128 enables the bar 22 to be lifted off of the eccentric portion or crank 27.

A relatively large mutilated gear wheel 28 is secured upon the shaft 15 to rotate with the worm wheel 14, and the wheel 28 has opposite sets of teeth 29 for operating a mutilated pinion 30 secured upon the shaft 26. Each set of teeth 29 rotates the pinion 30 through one-half a circle and the pinion is then held stationary during almost one-half the revolution of the wheel 28 until the other set of teeth 29 engages the pinion. The pinion 30 is thus rotated intermittently for operating the chuck at the proper moments.

The bracket 4 is used for guiding the wire guiding and applying device, and for this purpose, an elongated plate 31 is bolted or otherwise secured to one side of the bracket 4, and a carriage or slide 32 is movable along that side of the guide plate 31 opposite the bracket 4 and is provided with upper and lower hook-shaped portions 33 slidably engaging the upper and lower edges of the plate.

The wire guiding and applying device embodies a block 34 divided on a median plane to provide the sections 35 which are clamped together by means of screws 37 or otherwise, whereby the sections can be removed and their confronting faces filed away from time to time as the block becomes worn. The sections 35 have a depending screw 36 provided in halves and which when threaded into the carriage 32 will hold the block in place. The block 34 is provided with a longitudinal bore 39 between the sections 35 and of a diameter equal to that of the twisted wire. A tubular member 38 is slipped in the forward end of the bore 39 and has a head 38^a fitting within the block 34 and held in place by a pin 38^b or other suitable means. One section 35 and one side of the tubular member 38 are provided with a horizontal slot 40 extending to the rear end of the block, the forward end of the slot 40 providing a diagonal wall 42 arranged at an acute angle relative to the bore 39 for guiding the wires or strands 44 into the tubular member 38 whose bore is of the diameter of the twisted wire core when completed. The other section 35 has a horizontal slot 41 extending to the rear end of the block, the forward end of the slot 41 providing an oblique wall 43 arranged at an acute angle with the bore 39 opposite the wall 42, for guiding the wires or strands 50 onto the core.

In order to assist in properly twisting the wires or strands of the core, a pin 45 of the diameter of the core is fitted in the tubular member 38 and is provided at its forward end with a head 46 that can be secured to the block in any suitable manner to prevent the displacement of the pin 45. The rear end of the pin 45 has an extension 47 of semi-circular cross section across the flat face of which the wires 44 move diagonally, the shoulder formed by the extension 47 being oblique, as at 48, to assist in guiding the wires 44, and the end of the extension 47 being oblique, as at 49, in the reverse direction to direct the wires helically in connection with the oblique shoulder 48. The end of the tubular member 38 is formed, as at 51, to direct the strands or wires 50 helically upon the core.

The method of twisting the wires as illustrated in Fig. 7, is as follows: The twisted wire is rotated away from the observer, to twist the wires 44 at the end of the pin 45 to provide the twisted wire core, the twisted wire moving to the right, as seen in Fig. 7.

The twisting of the twisted portion of the wire also serves to wrap the wires 50 helically upon the twisted wire core, by the same operation. Thus, the core wires are fed from one side to the longitudinal line of the twisted portion, whereby the twisted portion in being rotated will twist the core wires to provide the twisted wire core, and the rotation of the twisted portion will also wind the covering wires 50 upon the twisted wire core in the same direction, the wires 50 being fed from one side to the longitudinal line of the twisted wire where the wires 50 are wound upon the core helically.

The carriage 32 is advanced forwardly with the block 34 by the twisting of the wire, and to prevent the carriage and block from moving forwardly too fast, due to the tension of the wire, the twisting thereof, and other forces, a chain or flexible element 52 is connected to the carriage 32 and passes over a pulley wheel or guide 53 rotatably mounted at one side of the casing 1. A suitable weight 54 is connected to the lower free end of the flexible element 52, and pulls said element to retard the movement of the carriage 32 and block 34. As illustrated, the pulley wheel 53 is rotatable upon a lubricant supply pipe 55 attached to one side plate 2 of the casing, although the pulley wheel can be supported in any other suitable manner. A lubricant cup 56 is carried by the pipe 55 for supplying oil or other lubricant into the casing in which the worm gear 14 rotates, whereby the lubricant will be carried to the worm 13, shaft 7 and other working parts to prevent heating. Grease cups 57 can also be connected to one of the members 6 for supplying grease or other lubricant to the shaft 7 at the opposite ends of the form 13.

The means for moving the carriage 32 rearwardly for discharging the twisted wire through the chuck and shaft 7 embodies a slide 58 movable along the guide plate 31 the same as the carriage 32, and connected by a connecting rod 59 with a wrist pin 60 projecting from the outer face of the gear wheel 28. Said gear wheel has slots 61 in which the wrist pin 60 is adjustable for regulating the throw of the slide 58.

The wires 44 and 50 are guided to the block 34 and for this purpose, angle iron supports 62 are secured to the sides of the carriage 32 and support a transverse angle iron guide 63 by means of posts 64, the guide 63 having slots 65 for the wires 44 and slots 66 for the wires 50. A transverse guide plate 67 is secured to the free end of the bracket 4 for guiding said wires therethrough from the reels or spools.

The operation of the machine is as follows: The shaft 7 rotates continuously during the operation of the machine, thereby rotating the chuck 20 at a high speed, while the gear wheel 28 rotates at a much slower speed with the worm wheel, thereby reciprocating the slide 58. The slide 58 is moved forwardly away from the carriage 32 during the twisting of the wire, so as not to interfere with the carriage, and after the slide 58 reaches its foremost position its motion is reversed and it starts rearwardly moving toward the carriage 32 which is still moved forwardly by the twisting of the wire. After the slide 58 has moved rearwardly a short distance, one set of teeth 29 engage the pinion 30 and rotates it through one-half a circle, thereby sliding the bar 22 so as to release the chuck 20, and the slide 58 then abuts the carriage 32 and moves the carriage rearwardly, thereby forcing the twisted wire rearwardly through the chuck and shaft 7, and pulling the wires 44 and 50 with the block 34. When the carriage 32 and block 34 are moved by the slide 58 adjacent to the chuck 20, the other set of teeth 29 rotates the pinion 30 to slide the bar 22 for operating the chuck so that its jaws grip the twisted wire, and in the meantime, the slide 58 is started forwardly so as to move away from the carriage 32, but the moment that the chuck is brought into gripping position, the wire in being twisted will force the block 34 and carriage 32 forwardly. The slide 58 is moved ahead of the carriage 32.

This machine can also form the tubular or hollow twisted wire by employing the mandrel wire which extends through the tubular member 38 in place of the pin 45 and twisted core, as shown in said patent, and reference in this connection is to be had to Figs. 10 and 11 illustrating a block 34′ for the formation of tubular twisted wire. The sections 35′ have the slots 40′ providing the guiding walls 42′, and the tubular member 38′ through which the mandrel wire 44′ extends has its end formed with guiding points 51′ for guiding the wires helically onto the mandrel wire.

In the modification illustrated in Fig. 9, the gear wheel 28′ carried by the shaft 15 has a single set of teeth 29′ for giving a pinion 70 a complete rotation intermittently. The pinion 70 is secured to a rotatable shaft 71 journaled to one side of the casing 1, and a crank arm 72 is secured to and carried for rotation by the shaft 71. A wrist or crank pin 60′ is carried by the crank arm 72, said pin being adjustable in a slot 61′, with which the arm 72 is provided, and the connecting rod 59 is pivotally connected at one end with the pin 60′. A bar 73 is connected to the pivot between the connecting rod 59 and slide 58 and has rack teeth 74 engageable with a pinion 30′ on the shaft 26, the bar 73 being slidable in a guide 75 carried by one member 6. This form provides for the quick return of said carriage 32 and

block 34 to save time and increase the output of the machine. Thus, after the carriage 32 is moved forwardly while the slide 58 is at the forward end of its path of movement, the teeth 29′ reach the pinion 70 and give said pinion a complete revolution, thereby first moving the slide 58 rearwardly and then turning the slide forwardly by a quick movement, leaving the carriage 32 adjacent to the chuck. The slide 58 then remains at a standstill during the twisting of the wire and until the carriage 32 is moved forwardly again. When the slide 58 starts rearwardly, the bar 73 is slid to cause the teeth 74 to rotate the pinion 30′ through a half revolution in one direction to release the chuck, and when the carriage 32 is moved adjacent to the chuck and the slide 58 returned to its foremost position, the teeth 74 will reverse the pinion 30′ to cause the chuck to grip the wire.

Having thus described the invention, what is claimed as new is:

1. In a wire twisting machine, a casing having a bracket extending therefrom, a wheel rotatable in said casing, a tubular shaft journaled in the casing and connected with said wheel to rotate it, a chuck carried by said shaft, a carriage movable along said bracket toward and away from the chuck, a wire applying device carried by the carriage, a slide movable along the bracket and operably connected with the wheel for moving the carriage toward the chuck, and means also operably connected with said wheel for operating the chuck.

2. In a wire twisting machine, a frame embodying a casing comprising side plates, a rotary tubular shaft journaled between said plates, a chuck carried by said shaft, a wheel mounted for rotation within the casing and rotated by said shaft, a wire applying device movable toward and away from the chuck, and means operated by said wheel for moving said device toward the chuck and for operating the chuck.

3. In a wire twisting machine, a frame embodying a casing comprising side plates, a rotary tubular shaft journaled between said plates, a chuck carried by said shaft, a wheel mounted for rotation within the casing and rotated by said shaft, a wire applying device movable toward and away from the chuck, and means operated by said wheel for moving said device toward the chuck and for operating the chuck, said shaft and the portions of said plates surrounding said shaft having interengaging annular grooves and ribs to take up the end thrust.

4. A wire twisting machine embodying a frame having a casing, said casing comprising side plates, a rotary tubular shaft journaled between said side plates and having a worm, a chuck carried by said tubular shaft, a shaft journaled within the casing, a worm wheel secured to the last-mentioned shaft and meshing with the worm, a wire-applying device movable toward and away from the chuck, a wheel secured upon the last-mentioned shaft outside of the casing, means operated by the last-mentioned wheel for operating the chuck, and means operated by the last-mentioned wheel for moving the wire applying device toward the chuck.

5. In a wire twisting machine, a frame embodying a casing having side plates and a bracket projecting therefrom, a tubular shaft journaled between the side plates and having a worm, a chuck carried by said shaft, a shaft journaled within the casing, a worm wheel upon the second mentioned shaft meshing with said worm, a wheel upon the second mentioned shaft, means operated by the second mentioned wheel for operating the chuck, a carriage slidable along the bracket, a wire applying device carried by the carriage and movable therewith toward and away from the chuck, a slide movable along the bracket for moving the carriage toward the chuck, and a connecting rod connecting said slide and second mentioned wheel.

6. In a wire twisting machine, a frame, a tubular shaft journaled therein, a chuck carried by said shaft, a slidably mounted bar carried by the frame and connected to the chuck, a cap plate carried by the frame for holding said bar in place, a shaft journaled within the frame and having a crank portion, said bar having an open slot receiving said crank portion, a wire applying device movable toward and away from the chuck, and an operative connection between said shafts for intermittently rotating the second mentioned shaft during the continuous rotation of the first mentioned shaft.

7. In a wire twisting machine, a wire applying device having a bore for a twisted wire core, and another bore for a twisted wire covering wrapped on the core, means for guiding the core wires from one side to the first mentioned bore and guiding said wires helically to form the twisted wire core, and means for guiding cover wires from one side to the second mentioned bore and guiding them helically around the core.

8. In a wire twisting machine, means for guiding wire from one side to a longitudinal line and for guiding the wire helically in said line to form a twisted wire core, and means for guiding wire from one side to said longitudinal line and helically around the twisted wire core.

9. In a wire twisting machine, a wire applying device having a bore for a twisted wire covering wrapped on a core, and a slot extending to one side from said bore for guiding cover wires to said bore, a member within said device formed to guide the cover

wires helically around a core, said member having a slot extending to one side for the passage of core wires, and means within said member for guiding the core wires helically therein.

10. In a wire twisting machine, a wire applying device having a bore and slots for the passage of core and cover wires, a tubular member within said bore having its end formed to guide the cover wires helically within said bore around a twisted wire core, said tubular member having a slot for the passage of the core wires into the bore of said tubular member, and a pin fitted within the bore of the tubular member and having its end formed to guide the core wires helically.

In testimony that I claim the foregoing as my own, I have hereto affixed my signature in the presence of two witnesses.

GARY E. SMITH.

Witnesses:
IVY E. SIMPSON,
AGNES ROCKELLI.

Copies of this patent may be obtained for five cents each, by addressing the "Commissioner of Patents, Washington, D. C."