Oct. 1, 1968 R. D. DELBOURGO ET AL 3,403,964

OXYACETYLENE BLOWPIPES

Filed June 8, 1967 3 Sheets-Sheet 1

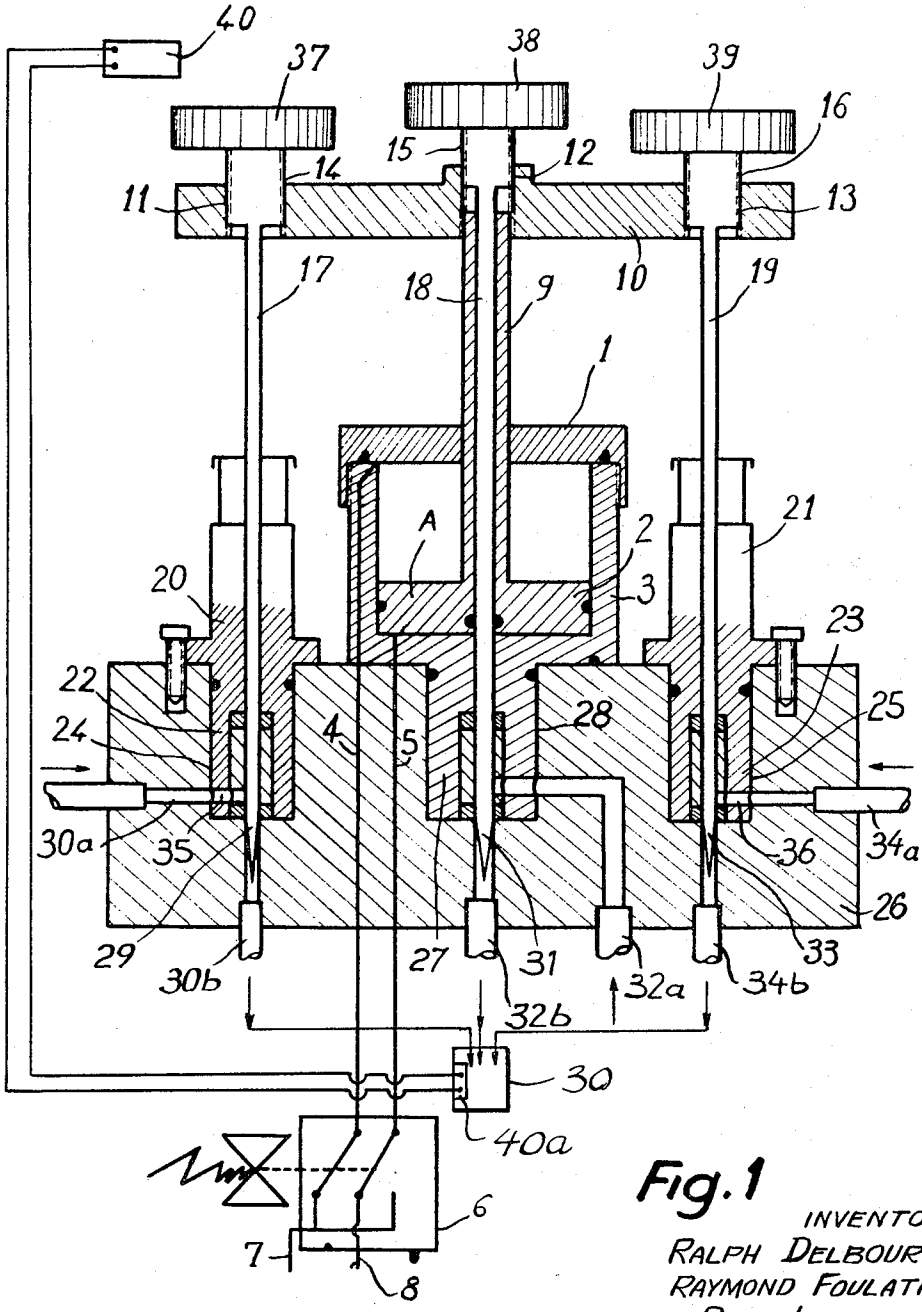

Fig. 1

INVENTORS
RALPH DELBOURGO
RAYMOND FOULATIER
PAUL LAFFITTE
JEAN MENERET
LOUIS MINJOLLE

BY

Bacon & Thomas
ATTORNEYS

Oct. 1, 1968 R. D. DELBOURGO ET AL 3,403,964

OXYACETYLENE BLOWPIPES

Filed June 8, 1967 3 Sheets-Sheet 2

Fig. 2

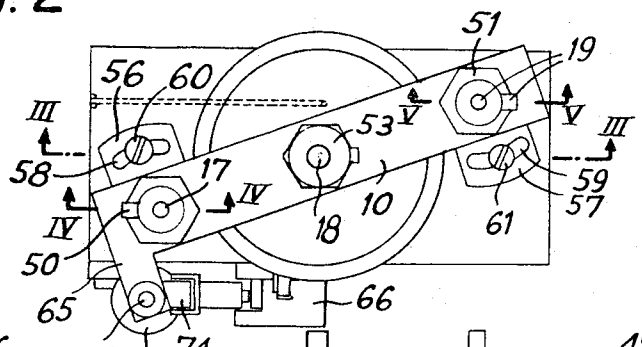

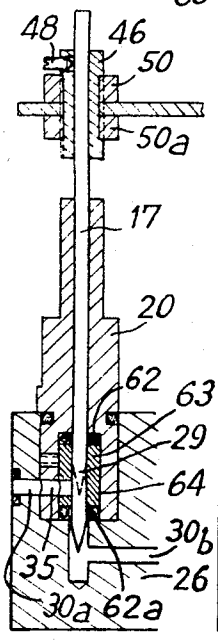

Fig. 4

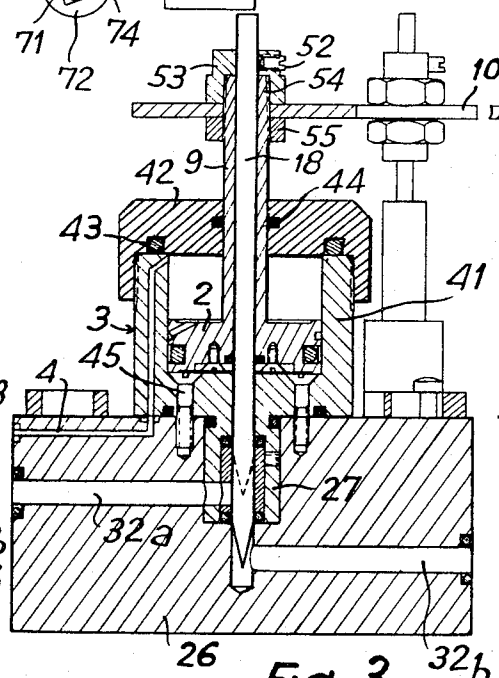

Fig. 3

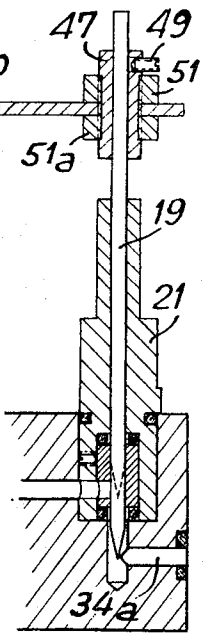

Fig. 5

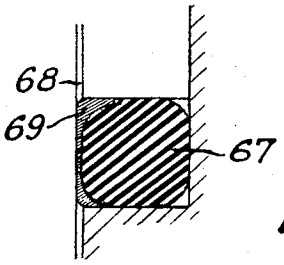

Fig. 7

INVENTORS
RALPH DELBOURGO
RAYMOND FOULATIER
PAUL LAFITTE
JEAN MENERET
LOUIS MINJOLLE

BY
Bacon & Thomas
ATTORNEYS

Oct. 1, 1968 R. D. DELBOURGO ET AL 3,403,964

OXYACETYLENE BLOWPIPES

Filed June 8, 1967 3 Sheets-Sheet 3

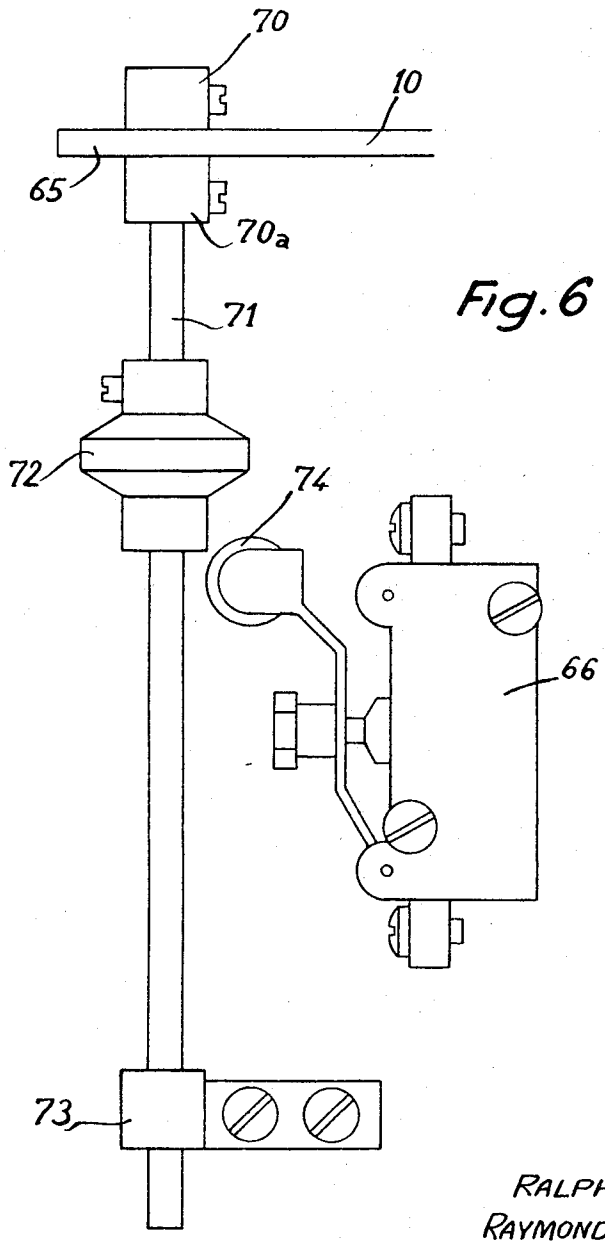

Fig. 6

INVENTORS
RALPH DELBOURGO
RAYMOND FOULATIER
PAUL LAFITTE
JEAN MENERET
LOUIS MINJOLLE

BY
Bacon & Thomas
ATTORNEYS

United States Patent Office

3,403,964

Patented Oct. 1, 1968

3,403,964

OXYACETYLENE BLOWPIPES

Ralph D. Delbourgo, Paris, Raymond G. Foulatier, Houilles, Paul F. Laffitte, Paris, Jean Meneret, Sevres, and Louis Minjolle, Tarbes, France, assignors to Commissariat à l'Energie Atomique, Paris, France

Filed June 8, 1967, Ser. No. 644,582
Claims priority, application France, June 17, 1966, 65,989
6 Claims. (Cl. 431—256)

ABSTRACT OF THE DISCLOSURE

A blowpipe assembly for oxyacetylene devices having at least three adjustable feed means connected to a combustible gas pipe, a combustion supporting gas pipe and a motivating gas pipe. Each feed means being controlled by a needle which coacts with an adjustable orifice through which the gases must pass, and electrical ignition means for the combustible mixture formed by the combustion and supporting gases. The needles are all connected to a common yoke which is displaced by a driving device actuated by the motivating gas and which cooperates with a contactor member controlling the electrical ignition means.

The present invention relates to oxyacetylene blowpipes.

In oxyacetylene blowpipes known hitherto, the gas feeding device produces carbon deposits both during ignition and extinction of the flame.

The improvement to oxyacetylene blowpipes according to the present invention consists in providing a feed of combustible and combustion supporting gas in definite and adjustable proportions, and ignition of the combustion mixture by an electric spark within the feed nozzle in synchronism with the progressive arrival of the mixture.

Such a blowpipe improved according to the invention enables instantaneous ignition of an intense high temperature flame to take place from a preformed mixtures, without production of carbon deposits.

Carbon deposits are thus avoided both during ignition and extinction of the flame so that a progressive growth or diminution of the required flame can be obtained from a mixture whose concentration is strictly controlled and stable.

The device of the invention moreover enables rapid performance of the operations of variable opening and closing of the control valves to be effected, a complete independance of the regulation of the flow of the combustible and combustion supporting fluids to be achieved, and a controlled interval between the opening of the valves controlling the discharge of the respective gases. These adjustments can be effected without dismantling the apparatus. These characteristics enable instantaneous and repeatable ignition of a preformed mixture to be obtained.

According to the present invention, the admission control needles for the gas are rigidly secured to a yoke operable by an actuating member and which cooperates with a contactor element controlling the electric ignition means of the combustible mixture, adjustment means ensuring the positioning of the needles with respect to the yoke and control of the gas admission apertures.

Other characteristics and advantages of the invention will appear from the following description of one embodiment of the invention, given by way of example, with reference to the accompanying drawings in which:

FIG. 1 is a schematic view of a feeding and ignition device for an oxyacetylene blowpipe of the invention,

FIG. 2 is a plan view of one embodiment of a feed and ignition device for a blowpipe,

FIG. 3 is a sectional view along line III—III of FIG. 2,

FIG. 4 is a sectional view along line IV—IV of FIG. 2,

FIG. 5 is a sectional view along line V—V of FIG. 2,

FIG. 6 is an elevational view showing in detail the contacting device and its control member, and

FIG. 7 is a sectional view of an embodiment of a seal used in the device of the invention.

The feed and ignition device shown schematically in FIG. 1, comprises a pneumatic driving device **1** constituted by a piston **2** movable in a cylinder **3** and subjected on its two faces to the action of a fluid introduced into the cylinder by ducts **4** and **5** connected to a five-way valve **6** enabling the ducts **4** and **5** to be connected alternately to a source of compressed fluid by a further duct **7** and to an opening **8** to the atmosphere. In this way, one of the faces of the piston is subjected to the pressure of the fluid when the other face communicates with the atmosphere. The piston **2** is connected by a hollow rod **9** to a yoke **10** having threaded holes **11**, **12**, **13** in which are engaged the threaded upper portions **14**, **15**, **16** of needles **17**, **18**, **19**, which are thus connected for axial movement with the yoke **10**. The needles **17** and **19** are slidingly mounted respectively in guiding sleeves **20**, **21**, whose lower parts **22**, **23**, forming throttle chambers, are rotatably mounted in cylindrical housings **24**, **25**, formed in a valve body **26**. The needle **18** is slidingly mounted within the hollow rod **9** of the piston and in an extension **27** of the cylinder **3** which is engaged in a housing **28** of the valve body **26**.

The needle **17**, by means of its extremity **29** which forms a point, controls the output of acetylene which circulates through the admission duct **30***a* and the exit duct **30***b*, the needle **18** by its pointed extremity **31** controlling the output of operating or projecting air circulating in the admission duct **32***a* and exit duct **32***b*, and the needle **19**, by its pointed extremity **33** controlling the oxygen circulating in the admission duct **34***a* and the exit duct **34***b*.

The guiding sleeves **20** and **21** have respectively at their lower portions **22**, **23** which form throttle chambers, an orifice **35**, **36**, which ensures communication between the gas admission duct and exit duct. By rotating the sleeves **20**, **21**, through a predetermined angle, the size of the admission orifice, and thus the output of gas, can be varied. There is thus provided a first adjustment of the needles **17**, **18**, **19** in depth, by screwing the heads **11**, **12**, **13** on the yoke **10**, by means of knurled knobs **37**, **38**, **39** and a second adjustment by means of the guide sleeves **20**, **21** which are displaced by rotation to obtain a desired opening of the orifices of the admission ducts **30***a* and **34***a*.

These two adjustments enable the relative discharges of the constituents to be controlled, which latter are preserved when the three needles **17**, **18** and **19** are simultaneously displaced under the action of the driving device **1**.

The device shown in FIG. 1 is in the closed position of the ducts and the aforesaid adjustments have been made. The conduit **5** is then placed in communication with the source of compressed air and the duct **4** with the opening to the atmosphere, so that the piston is displaced in the direction indicated by the arrow A raising simultaneously the yoke **10** and the needles **17**, **18**, **19** which uncover the openings of the admission ducts **30***a*,

32*a* and 34*a* to admit combustible gas and combustion supporting gas into the blowpipe schematically shown at **30**.

For a determined position of the needles **17**, **18**, **19** corresponding to the ignition of the blowpipe, the piston, which is controlled by the electro-valve **6**, is stopped, and simultaneously the yoke **10** comes into contact with a contacting element **40** which controls in known manner the electrical blowpipe ignition device **40***a*.

In order to extinguish the blowpipe flame, the feed of the ducts **4** and **5** is reversed so as to drive the piston in the reverse direction to that of the arrow A, together with the yoke **10** and needles **17**, **18**, **19** which close the orifices of the admission ducts **30***a*, **32***a* and **34***a*. In FIGS. 2, 3, 4 and 5, there is shown an embodiment of the device of the invention in which will be found the principal elements described with reference to FIG. 1. The cylinder **3** is constituted by a body **41** which is closed at its upper end by a screw-cap **42**, a sealed joint **43** being interposed between the cap **42** and the body **41**, and a further seal **44** being interposed between the rod of the piston **9** and the opening in the cap **42** through which it passes.

The cylinder body **41** is fixed to the valve body **26** by screws **45**.

The upper ends of the needles **17**, **18**, are held tightly in sleeves **46**, **47** by means of set-screws **48**, **49** the sleeves **46**, **47** being externally threaded to receive nuts **50**, **50***a* and **51**, **51***a* which secure the sleeves **47**, **46** and consequently needles **17**, **19** in the yoke **10**. By adjusting the sleeves and nuts, it is possible to vary the positions of the needles.

The needle **18**, which is mounted in the hollow rod **9** of the piston, is fixed by a set screw **52** on a sleeve **53** which is itself screwed onto the threaded end **54** of the hollow rod **9**, together with a lock nut **55**. The yoke **10** is gripped between the sleeve **53** and the nut **55** in such a way as to move the needle **18** with respect to the yoke **10** and to the hollow rod **9**.

To provide an angular adjustment of the guide sleeves **20**, **21**, the latter are provided with clamping plates **56**, **57** having slots **58**, **59** in which are engaged respectively screws **60**, **61** fixed in the valve body **26** of the blowpipe.

On the lower parts **29**, **31** and **33** of the pointed needles **17**, **18**, **19** are disposed seals **62**, **62***a* separated by a spacer **63**, which seals are disposed in housings **64** within the guiding sleeves **20**, **21** and in the extension **27** of the cylinder **3**. The upper seal **62** seals around the needle to avoid leaks to the exterior and the lower seal **62***a* constitutes the seating of the needle. The yoke **10** is laterally extended by a plate **65** on which is fixed by means of collars **70**, **70***a*, a shaft **71** carrying a cam **72** the shaft **71** being guided at its lower portion by a bearing **73**. The cam **72** cooperates with a roller **74** of a microswitch **66** of well known type.

When the cam **72** is displaced, it contacts the roller **74** which actuates the microswitch **66** so as to control the blowpipe ignition device.

FIG. 7 shows in section a preferred embodiment of a seal used in the device of the invention, such joint being constituted by a ring **67** of resilient material, preferably of rubber, which has on its contact faces for engagement with movable surfaces a layer **69** of a self-lubricating material such as "Teflon," which provides a satisfactory sliding of the surfaces without sticking and which obviates the necessity for greasing so as to satisfy security standards.

Of course, the invention is not limited to the embodiment shown and described in detail, since various modifications can be made thereto without departing from its scope.

What is claimed is:

1. A blowpipe assembly comprising feed means respectively connected to at least one combustible gas pipe, at least one combustion supporting gas pipe and at least one motivating gas pipe, each feed means being controlled respectively by a needle the point of which is adapted to adjust an orifice through which passes one of the gases, and electrical ignition means for the combustible mixture formed by the combustion and supporting gases, characterized in that the needles controlling the flow of the gases are rigidly connected to a yoke which is displaceable by a driving device actuated by the motivating gas, and which cooperates with a contactor member controlling the electrical ignition means, regulating means controlling the positioning of the needles with respect to the yoke and also the sizes of the gas admission orifices.

2. A blowpipe assembly according to claim **1**, characterized in that the driving device for the yoke comprises a piston having a rod rigid with the yoke, the piston being disposed in a cylinder and subjected on its faces to the action of the motivating gas whose admission to the cylinder is controlled by a valve.

3. A blowpipe assembly according to claim **1**, characterized in that the regulating means are constituted by a threaded portion on each needle which is engaged in a corresponding threaded hole in the yoke, each needle being held in position in the yoke by means of a set-screw.

4. A blowpipe assembly according to claim **1**, characterized in that the regulating means are constituted by a sleeve for each needle in which the needle is held in position by a set-screw, the sleeves being engaged in holes in the yoke and each having an external threaded portion on which are screwed on either side of the yoke lock-nuts which grip the latter.

5. A blowpipe assembly according to claim **1**, characterized in that each needle is slidably mounted in a central bore in a throttle device mounted for rotation through a given angle in a body portion of the assembly, said throttle device being in communication at one side with an exhaust orifice and at the other side, by means of a lateral opening with a gas admission orifice.

6. A blowpipe assembly according to claim **1**, characterized in that seals are provided in the form of rings of resilient material having on their faces a lining of self-lubricating material, which will contact the movable parts.

References Cited

UNITED STATES PATENTS

1,420,921	6/1922	Godfrey	158—27.4
3,280,881	10/1966	Hach et al.	158—27.4

FREDERICK L. MATTESON, JR., *Primary Examiner.*

E. G. FAVORS, *Assistant Examiner.*