(No Model.)

H. A. FENNER.

FENCE.

No. 455,940. Patented July 14, 1891.

Fig 1

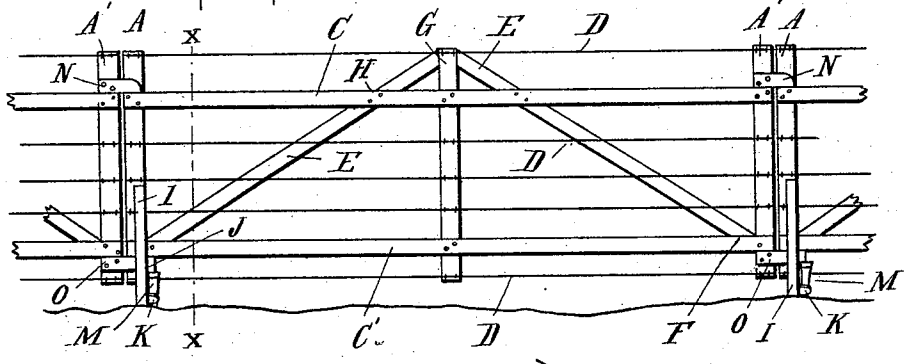

Fig 2

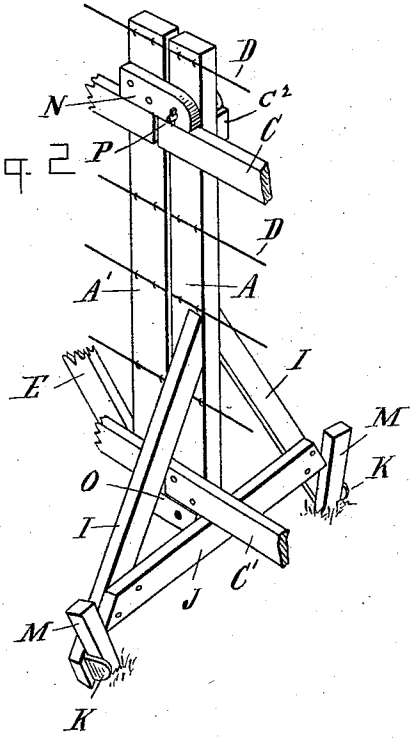

Fig 3

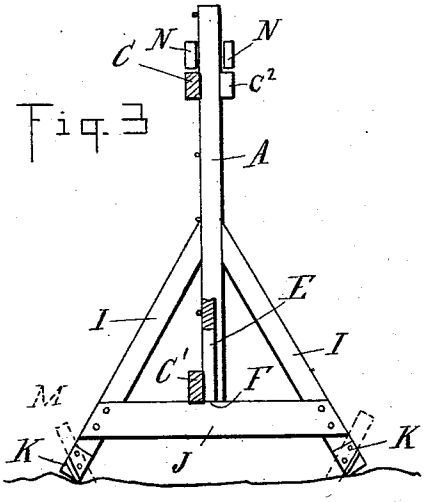

Witnesses:
P. M. Hulbert
Edmund Crosby

Inventor:
Hiram A. Fenner
By Thos. Sprague & Son
Att'y.

THE NORRIS PETERS CO., PHOTO-LITHO., WASHINGTON, D. C.

UNITED STATES PATENT OFFICE.

HIRAM A. FENNER, OF FLUSHING, MICHIGAN.

FENCE.

SPECIFICATION forming part of Letters Patent No. 455,940, dated July 14, 1891.

Application filed January 28, 1891. Serial No. 379,463. (No model.)

To all whom it may concern:

Be it known that I, HIRAM A. FENNER, a citizen of the United States, residing at Flushing, in the county of Genesee and State of Michigan, have invented certain new and useful Improvements in Fences, of which the following is a specification, reference being had therein to the accompanying drawings.

This invention relates to new and useful improvements in portable fences; and the invention consists in the peculiar construction of a portable fence made of panels of portable fencing, which consists of upright posts connected together by wires and boards suitably braced; further, in the peculiar construction of the end posts and braces therefor and the means for securing the end posts to the ground, and, further, in the peculiar construction of the connections between the adjoining panels, all as more fully hereinafter described.

In the drawings which accompany this specification, Figure 1 is an elevation of my improved fence as in use. Fig. 2 is a perspective view of one of the end posts detached; and Fig. 3 is a cross-section on line *x x*, Fig. 1.

Each panel of my fence is constructed in the following manner: A A′ are the end posts, which are connected at or near the bottom and top by means of the boards C and C′ and by means of the wires D.

E are braces connected at the bottom of each of the end posts and with the bottom boards at F and at the top to the top of the central post G, which is secured centrally of the boards of the panel. These braces are also secured at H to the top boards, thus making a rigid structure of each panel.

The post A of each panel is provided on both sides with the ground-supports I, which are connected together by means of the cross-bar J, secured thereto and to the end posts A. The ground-supports are made of sufficient length to extend a short distance below the bottom of the post and below the cross-bar. Upon each extension is secured the foot K, which I preferably make in the shape of an angle, one side being secured to the ground-support and the other extending downwardly therefrom in such relation to the bottom of the cross-bar as to form a bearing between for the securing-posts M, intended to be driven into the ground on either side.

The post A′ is provided at the top, above the top board, with the double cleats N, projecting some distance in front, and at the bottom, below the bottom-board, with the double cleats O, also projecting some distance in front. The cleats N are adapted to engage upon the posts above the top board and supporting-block C^2 of the adjoining panel and have a bearing thereon, while the bottom cleats are adapted to engage upon the post of the adjoining panel below the bottom board and to have a bearing upon the lower side thereof.

The object of the upper cleats is to carry the weight of the panel to the adjoining post A of the next panel, which is provided with similar ground-supports, while the function of the lower cleats is to prevent any danger to the fence from upheaval and to keep the adjoining panels of the fence in perfect line in relation to each other.

The cleats N and post A are provided with bolt-holes, in which is inserted the bolt P (provided with key) through top or lower cleats, as the surface of the ground will permit, to hold the panels more firmly together.

A fence thus constructed has all the strength of a solid-panel fence of boards, combining with it the cheapness of a wire fence. It is easily made, may be taken down by simply withdrawing the bolts from the cleats and the securing-stakes from the ground, and may be rebuilt as readily.

By forming the foot at the bottom of the ground-supports, with the socket between the foot and the cross-bar, in driving my stakes in they are firmly held against displacement from frost or otherwise in their position and also brace the fence strain in either direction.

What I claim as my invention is—

A portable fence composed of sections formed in panels consisting of a top and bottom board and cross-wires, end posts to which the same are secured, one of which is provided on opposite sides with inclined ground-supports, a cross-bar uniting the ground-supports near their lower ends, inclined angle-feet secured to the ends of the supports at a

point below the ends of the cross-bar, stakes in the space between and resting against the feet and cross-bar, and overlapping cleats on the post at the opposite end of the panel, arranged to rest above and below the top and bottom boards, respectively, substantially as described.

In testimony whereof I affix my signature in presence of two witnesses.

HIRAM A. FENNER.

Witnesses:
M. B. O'DOGHERTY,
N. L. LINDOP.