Oct. 4, 1960 R. W. HENNING ET AL 2,954,717

THREADED PLUG AND EXPLOSIVELY DRIVEN STUD THEREFOR

Filed Feb. 17, 1954

Fig. 1

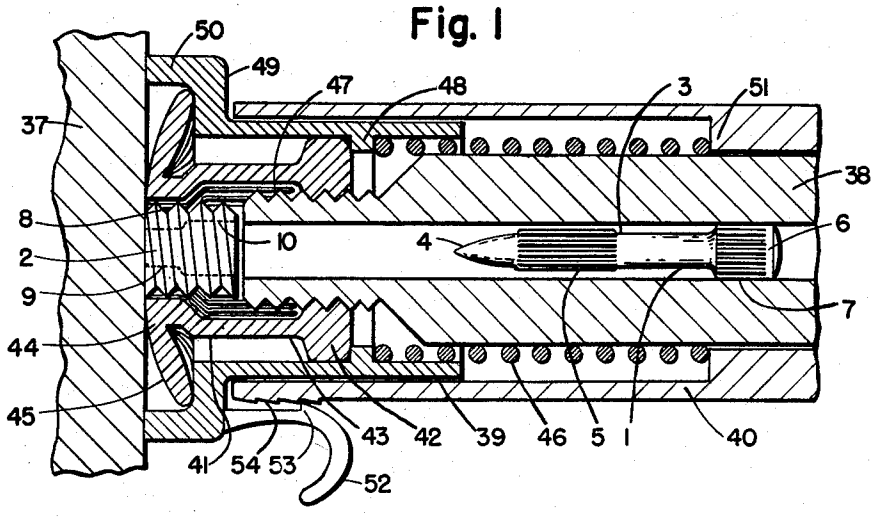

Fig. 2

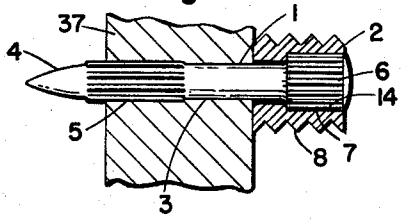

Fig. 3

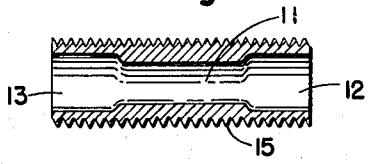

Fig. 5

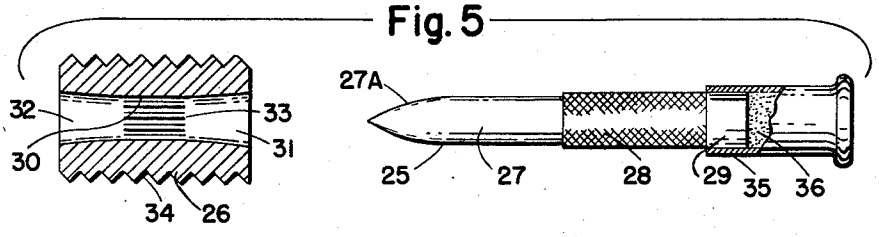

Fig. 4

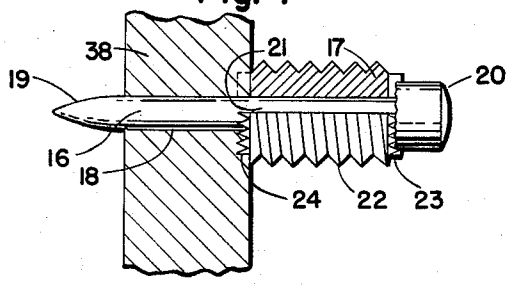

INVENTORS
ROBERT W. HENNING
BY ELMER F. PFAFF
ROWLAND J. KOPF
John D. Wilkins
ATTORNEY

United States Patent Office 2,954,717 Patented Oct. 4, 1960

2,954,717

THREADED PLUG AND EXPLOSIVELY DRIVEN STUD THEREFOR

Robert W. Henning, Rocky River, Elmer F. Pfaff, Mantua, and Rowland J. Kopf, Rocky River, Ohio, assignors, by mesne assignments, to Olin Mathieson Chemical Corporation, a corporation of Virginia

Filed Feb. 17, 1954, Ser. No. 410,787

2 Claims. (Cl. 85—1)

This invention relates to fasteners and more particularly to studs of special form adapted to be power driven by explosives into wood, steel, concrete, masonry or the like materials to fasten work including various objects on a surface of these materials at a great saving in time and labor.

Explosive drivable studs of various thread sizes and lengths are necessarily in use to accommodate the myriad of work situations encountered; and it will be appreciated that this represents a disadvantage in that, as a result, various sizes of explosives actuated tools and various calibres of explosive power cartridges must be carried at the place of work. Interchange of tools and cartridges as well as fasteners on the job delays the work. Moreover, it has always been recognized that in fastening operations with these types of fasteners over-penetration, especially in plate and thin wall structures, represents a hazard and is to be avoided regardless of the precautionary measures required to do so. It is self-evident that such measures are often likely to keep the work from progressing as rapidly as it might and thus prevent the full realization of the advantages this type of fastening method. A still further disadvantage of certain kinds of prior fasteners of the type to which this invention relates is a tendency of these to strike the surface fired into at an angle. This makes for out-of-square shots which fail to penetrate properly.

Therefore, an object of this invention is the provisions of a new and improved explosive drivable stud having the simplified structural features hereinafter described. Another object is to provide an improved stud so designed as to offer explosive actuated tool operators a selection of a variety of thread sizes in the stud but which is ejectable from the same size tool barrel and thus makes possible reduction in frequency of fastener, cartridge and tool interchanges on the job. Another object is to provide a stud which can be driven into a supporting material under the force of an explosive without any appreciable possibility of over-penetration and out-of-square shots. Other objects and advantages will become apparent from the following description of various illustrative and preferred embodiments of the invention when taken together with the accompanying drawing in which:

Figure 1 is a view in cross-section taken through the barrel of a driving tool and a supporting object into and on which one embodiment of the stud of this invention, shown in elevation, is to be emplaced;

Figure 2 illustrates the embodiment of Figure 1, partially in cross-section, after it has been driven;

Figure 3 is a cross-sectional view of a preferred modification of the outer member of the fastener of this invention;

Figure 4 is an elevational view partly in cross-section showing another embodiment of the invention driven into a supporting object; and

Figure 5 is an elevational exploded view of a still further embodiment prior to assembly.

In accordance with this invention, a fastener or stud

is provided of two members, one carrying the object attaching structure such as threads and adapted to remain implanted upon the surface of the work or supporting objects and the other adapted to penetrate the supporting object and impale the first part thereon. The one member, also called the plug coupling, which is the thread carrier, may be formed of any suitable threaded length, of any suitable thread diameter and of any suitable number of threads per unit of threaded length. This thread carrier is perforated longitudinally for passage therethrough and of permanent reception therein of a portion of the other member hereinafter called the pin. Generally the attachment member is a centrally perforated cylinder. One end of the pin is pointed to facilitate penetration of the forepart of the pin into the supporting object under the driving force of an explosive propellant. The other end of the shank of the pin is designed to apply the residue of the explosive force to the threaded member and thereby limit the penetration of the pin and fix the thread carrier implanted upon the supporting object. This end of the pin may take the form of an enlarged head so related to the perforation of the penetrable plug as to insure that the pin upon being fired into the plug will not pass through the plug entirely. The pointed end of the pin may pass freely through the plug perforation. The head of the pin is unable to pass beyond that end of the plug which is designed to receive the head of the pin. Thus a series of studs having pins of uniform head diameters can be provided with plugs having predetermined threaded diameters, threaded lengths and thread sizes differing from one another.

Generally the length of the plug which is also that of its longitudinal perforation is not less than the length of the tapered penetrating point of the pin. This relationship of lengths assists in aligning the pin so as to facilitate its being driven squarely into the surface of a supporting object.

Preferably the thread carrier is formed so as to be reversible, i.e. so as to have symmetrical anterior and posterior constructions. Moreover, it is preferred that one or the other member or both be longitudinally serrated at the mating surfaces so as to provide a more positive locking against rotational relative motion between the members than that provided by friction alone particularly whenever an impact bond between the members is not attainable consistently. This locking action feature may be extended to fix not only the members with respect to each other angularly but to also fix one or both positively with respect to the supporting material.

But the character of this invention will be better understood from the description of various specific embodiments which now follows:

With reference to Figures 1 and 2 of the drawing, the fastener illustrated consists of the pin **1** and the plug **2**. These are shown in Figure 1 just prior to assembly in relationship to each other, to the supporting work surface **37** and to the tool, which may be of any suitable type, having a barrel **38** spring biased forwardly, a tubular shield member **39** slidably disposed about barrel **38** in coaxial relationship, a coaxial outer tube or barrel housing **40**, and a shield spring **46** which is compressed between the internal flange **48** on tube shield **39** and a shoulder **51** on the housing **40** so as to forwardly bias shield member **39** the front part of which is made up of a spall deflector or guard plate **49** and peripheral skirt **50** the latter of which is adapted to be pressed against the work surface **37**. The tool is shown fully pressed against supporting object **37** just at the moment of firing with the pin **1** shown in transit in the bore of the barrel.

Provided on the muzzle of the tool barrel and secured thereon in any suitable manner as by threads **47** is a quick-release plug adaptor or holder **41** for receiving and

holding threaded plug 2 before actuation of the tool and until part of the tool after firing is backed off from the work and specifically until housing 40 together with shield structure 39 are permitted rearward movement with respect to the barrel 38. This adaptor or plug receptor consists of an internally threaded nut-like barrel connector 42 engageable with barrel threads 47, a number of spring elements or resilient fingers 43 integral with and extending forwardly from connector 42, one or more internally rough surfaced grip members 44 on the end of each finger and biased by elements 43 radially away from the axis of the bore of the barrel and, extending outwardly from each grip 44, a radial array of rigid links or appendages 45 adapted to be acted upon at one end thereof by the forwardly biased plate 49 and its skirt 50 so as to force each grip 44 toward the axis of the tool barrel. When at rest, the shield structure with its plate 49 and skirt 50 and also the barrel 38 are forwardly biased to protrude an appreciable distance from the open front end of the housing 40. In this position the array of grips 44 tend to contract about the inserted plug 2 and hold it captive substantially in abutment with the tool barrel muzzle. To insert the plug 2 into the adaptor 42, sleeve 39 and its plate 49 are moved back away from links 45 by pulling back on catch 52, thus permitting the array of grips 44 to spring outwardly and dilate the opening of the adaptor 41. To fire the tool, it must be pressed firmly and completely against object 37, in which position the adaptor 41 still continues to grip the plug 2. In this position a sear 53 on catch 52 engages automatically with one of the series of detents 54 on housing 40 and upon withdrawal of the tool away from work object 37 the impaled plug 2 and driven pin 1 are released from the tool muzzle. This sear and detent arrangement also facilitates insertion of a plug 2 into the adaptor 41. Reception of different lengths of plugs 2 is provided for by screw adjustment of the position of the adaptor 41 on threads 47 of the tool muzzle by turning connector 42 until the desired point is reached.

The impaling member of the fastener illustrated in Figures 1 and 2 consists of a pin 1 having an enlarged holding head 6 and a cylindrical shank 3 of reduced cross-section as compared to the head 6 which is designed to closely fit the bore of the tool barrel.

The object attachment means of the fastener consists of a cylindrical plug 2 having sides of a diameter larger than that of either shank 3 or head 6 and of a configuration and size matching that of any suitable standard thread profile 8. Longitudinally the plug is centrally pierced by a hole 9 adapted to receive the shank 3 of pin 1 snugly and having an internal enlargement or socket 10 at one end to seat the head 6 of the pin.

The head 6 of the pin 1 is provided with longitudinal splines or serrations 7 designed to bite into plug 2 and lock it rotationally at 14 with respect to the pin 1 as the head 6 is seated with impact in the socket 10 of the central bore of the plug. This construction permits a load attaching means such as a nut being turned down on the threads 8 of the plug. Alternately the socket of the bore of the plug may be splined. Moreover, the shank 3 of the pin may be longitudinally serrated or fluted as shown at 5 so as to constrain the pin 1 rotationally with respect to the supporting object 37. When driven, the fastener as shown in Figure 2 consists of the pin 1 and the plug 2 swaged on the pin and impaled thereby on the work surface of 37. Inasmuch as the tapered penetrating portion 4 of the pin 1 is shorter than the length of the plug 2 and that of its bore, it will be appreciated that such cant of the fired pin 1 as it may assume within the barrel of the tool will be reduced to substantially zero at the muzzle of the tool before the point of the pin touches the supporting object 37.

In its preferred form, Figure 3, the plug is made reversible for the convenience of the tool operator, to expedite the work and for better operation in general.

The tubular body of the plug illustrated in Figure 3 has the bore 11 one end of which is enlarged to form socket 12 while the other end is enlarged to form an identical socket 13. Externally the plug is provided with a thread profile having a thread diameter, for example, less than that of the plug of Figures 1 and 2 but of greater length.

In the embodiment of Figure 4, the plug is also of the reversible type and consists of the pin 16 and the threaded plug 17. Pin 16 has an ogival point 19 adapting the shank 18 to accomplish penetration into supporting material 38 under the force of an explosive. The rear end of the pin 16 is provided with an enlarged holding head 20 as in the preceding embodiment. The plug 17 has the central perforation 21 and externally the side walls are formed with a thread profile 22. One end face of the plug 17 is provided with a radial array of sharp projections 23. These are adapted to be forced into the underface of the head 20 of the driven pin 16 under the force of the explosive by driven pin thus fixing the pin 16 and plug 17 rotationally. Similarly the other end face of the plug 17 is provided with an identical array of projections 24 which serves to fix the plug 17 and also the driven pin 16 rotationally with respect to the supporting object 38.

The embodiment of Figure 5 is of simplified construction adaptable to heavy duty usage. It consists of pin 25 and the plug 26. Anterior section 27 of the shank of pin 25 is of a cross-section almost as great as that of the heel 29 and the knurled intermediate section 28. As compared to the shank sections of the preceding embodiments, section 27, which as in the other embodiments has an ogival or pointed front end 27A, is of a diameter only slightly less than that of sections 28 and 29 both of which are part of the same posterior enlarged section. Section 28, however differs from heel 29 only in that section 28 is knurled or otherwise roughened to have grooves and protrusions for a purpose hereinafter disclosed. Hence anterior section 27 is designed to make a greater displacement in supporting materials so as to be capable of either holding a heavier load on the supporting material or of accomplishing desired penetration in more difficultly penetrable material. Attached to the heel 29 of pin 25 is an explosive propellant cartridge 35 of the rimfire type, for example, bearing any suitable propellant 36 such as smokeless powder or the like.

Plug 26 is perforated longitudinally by central bore 30 the major part of which, except for the ends 31 and 32, has a diameter slightly greater than that of heel 29 but less than that of the deformable radial protrusions on knurled section 28. The walls of bore 30 diverge at the ends to form enlargements 31 and 32. Midway along the bore of plug 26 there is preferably a longitudinally serrated or splined section 33 having inwardly directed protrusions designed to coact with knurled section 28 of pin 25 when the latter is driven into plug 26, so as to limit the extent of passage of the pin hrough the bore 30. The contracted midsection of bore 30 and its serrations 33 plastically deform together with the protrusions of section 28 and as a result not only is pin 25 halted at a desired point in bore 30 but an annular bulge of metal is formed adjacent the heel so as to better embed the heel 29 in one or the other of the ends 31 and 32. As a rule the longer the length of threaded plug 26 the greater is the length of serrations 33. This enables the anterior section 27 of pin 25 being driven with the proper degree of penetration into a supporting object so as to secure plug 26, with respect to its length, properly. Externally plug 26 is provided with threads 34 of any pitch and diameter needed by the job while using the same pin 25 as standardized and suitable for the explosive actuated tool employed.

It is to be understood that in the tool shown in Figure 1 not only can the adaptor 41 be adjusted back and forth on threads 47 along the muzzle of the barrel 38

but that an adaptor having segments 43 of different length may be substituted therefor. It is also to be understood that as the adaptor is adjusted the extent of normal protrusion of the forward end of the housing 40, which abuts against plate 49 and limits the rearward movement of shield 39, and the sears or pawls 54 carried thereon is accordingly adjusted. The plug holding structure disclosed is suitable for incorporation, for example, in the type of tool disclosed in copending patent application Serial No. 355,034, filed May 14, 1953.

Since many other embodiments within the scope of this invention may occur to those skilled in the art, it is to be understood that the foregoing is intended by way of illustration and not as a limitation of the scope of the present invention except as set forth in the appended claims.

What is claimed is:

1. A fastening device of the multiple-part type described adapted to be simultaneously assembled and fixedly secured as an inseparable unit to a surface of a supporting object by an explosively actuated fastener driving tool with a fastener ejecting barrel bore of a predetermined caliber comprising (1) a perforated thread carrying plug being one of a series of interchangeable plugs having predetermined size differences in length, diameter and pitch of screw thread and having opposing ends one of which is adapted to be positioned in contact with said surface and intermediate said ends a perforating bore including a reduction of a diameter less than said caliber and having adjacent both ends of said bore a counterbore of larger diameter than the diameter of the reduced remainder of said bore and (2) an explosive drivable plug impaling fastener adapted to be ejected from said tool barrel bore, said fastener having an anterior shank portion including a pointed tip and adapted to enter the reduced bore of said plug perforation and penetrate into said supporting object under explosive impact imparted in said bore without disruption of said shank and also having adjacent the rear an enlarged driving portion of a maximum diameter substantially equal to said barrel bore caliber whereby all of said fastener fits slidably in said bore and is adapted for reception of said enlarged portion in said counterbore at least in part in abutting relationship for longitudinal securement of said plug on said surface, said shank portion being longitudinally serrated forwardly of said driving portion to form radial extensions not in excess of said enlarged portion to provide upon penetration into said object both clockwise and counter-clockwise rotational as well as longitudinal fixation of said fastener with respect to said object and at least one of said enlarged portions and counterbore being longitudinally serrated sufficiently to form extensions to broach the other whereby there occurs locking of said plug and fastener against both clockwise and counterclockwise rotation relative to each other, said counterbores being identical whereby the plug is reversible.

2. The fastening device of claim 1 wherein the intermediate plug bore reduction is longitudinally serrated and wherein at least the front end of the enlarged driving portion includes radial projections adapted to be acted upon by said reduction to prevent complete passage of said driving portion through the reduction of the plug.

References Cited in the file of this patent

UNITED STATES PATENTS

1,157,666	Bennett	Oct. 26, 1915
1,365,869	Temple	Jan. 18, 1921
2,443,343	Crocker	June 15, 1948
2,455,825	Temple	Dec. 7, 1948
2,685,320	Rosan	Aug. 3, 1954
2,724,116	Termet	Nov. 22, 1955
2,731,636	Bumiller	Jan. 24, 1956

FOREIGN PATENTS

315,193	Italy	Feb. 19, 1934
1,055,269	France	Oct. 14, 1953