(No Model.)

S. B. LANGFORD.

RAILROAD GATE.

No. 288,580. Patented Nov. 13, 1883.

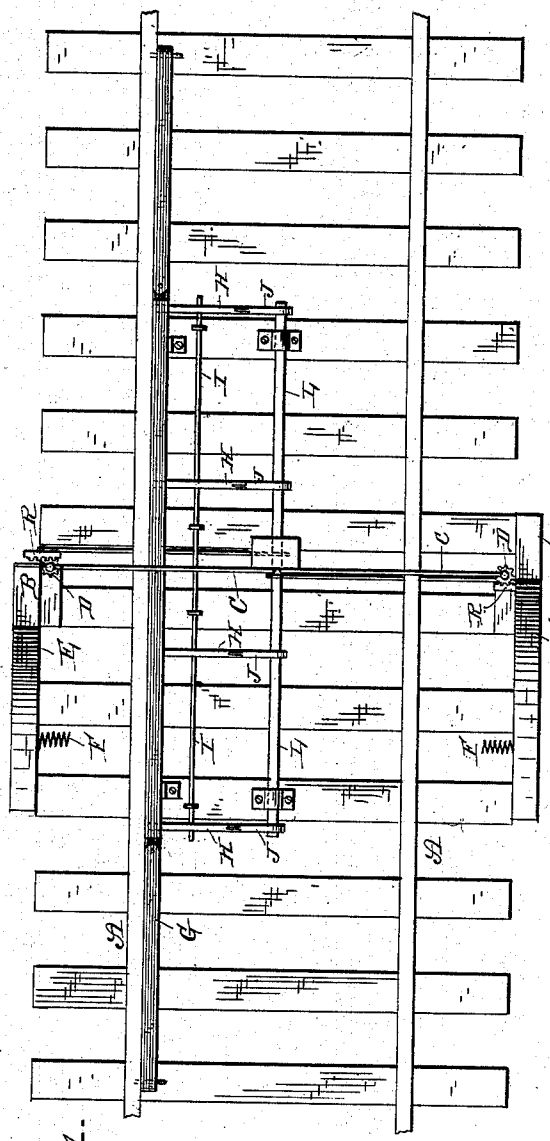

Fig. 1.

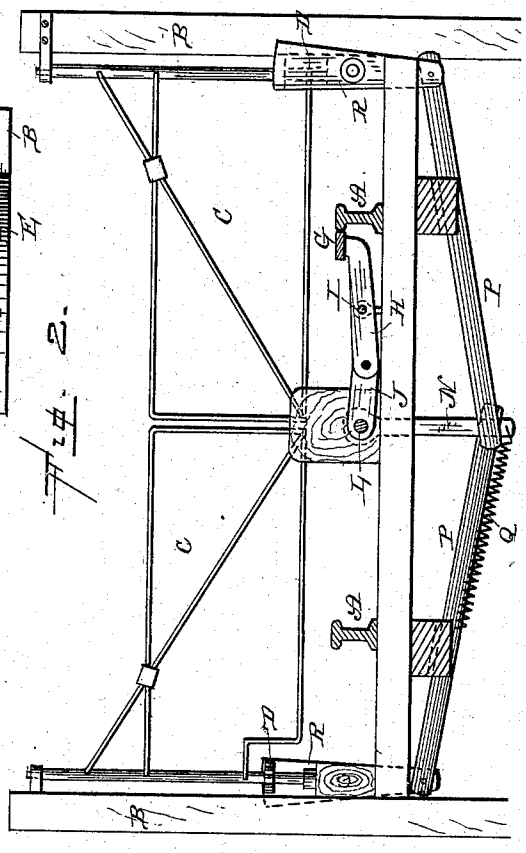

Fig. 2.

Witnesses.
Louis F. Gardner
J. W. Garner

Inventor.
S. B. Langford
per
J. A. Lehmann,
atty

N. PETERS, Photo-Lithographer, Washington, D. C.

UNITED STATES PATENT OFFICE.

SAMUEL B. LANGFORD, OF HOMER, LOUISIANA.

RAILROAD-GATE.

SPECIFICATION forming part of Letters Patent No. 288,580, dated November 13, 1883.

Application filed June 26, 1883. (No model.)

To all whom it may concern:

Be it known that I, SAMUEL B. LANGFORD, of Homer, in the county of Claiborne and State of Louisiana, have invented certain new and useful Improvements in Automatic Railroad-Gates; and I do hereby declare the following to be a full, clear, and exact description of the invention, such as will enable others skilled in the art to which it pertains to make and use it, reference being had to the accompanying drawings, which form part of this specification.

My invention relates to an improvement in automatic railroad-gates; and it consists in the combination of a jointed tread-bar, levers which are connected thereto, a partially-rotating shaft provided with arms which are pivoted to the ends of the levers, and an arm which projects down from the shaft and operates the connecting-rods, which are fastened at their outer ends, and two toothed levers which mesh with the pinions on the gate, as will be more fully described hereinafter.

The object of my invention is to provide an automatic gate which is made to open by the pressure of the wheels of the car upon the tread-bar, which is placed inside of one of the rails, and which bar holds the gate open until the train has passed through, when the gates automatically close.

Figure 1 is a plan view of my invention. Fig. 2 is a vertical cross-section of the same.

A represents an ordinary railroad-track, and B the posts, which are placed upon opposite sides thereof, but slightly out of line with each other. Upon these posts the gates C are hung in any suitable manner, each gate being provided with a pinion, D, at its inner end. The posts are braced by the pieces E, which have suitable springs, F, attached to their inner sides, for the gates to strike against, and thus prevent them from being injured by the concussion.

Placed inside of one of the rails is the tread-bar G, which is made of three sections, which sections are loosely connected together in any suitable manner. The two outer sections are pivoted at their outer ends to the ties upon which the track is laid, and these outer ends are placed far enough below the top of the track to allow the treads of the wheels to run readily upon them. The central portion is forced upward, so as to be just above or on a level with the top of the track; but when either one of the end pieces is depressed, both of the other parts sink downward, for the purpose of operating those parts which swing the gate open in advance of the car or train. Fastened loosely to this central portion of the tread-rail are a number of levers, H, which are all pivoted upon the same rod, I, and which are fastened at their inner ends to the arms J, which extend outward from the partially-rotating shaft L, which is placed midway between the two rails. When the tread is depressed, the levers force the arms upward, and thus cause the shaft to partially rotate in its bearings.

Secured rigidly to the shaft L, at or near its center, is the arm N, to the lower end of which are pivoted the two connecting-rods P, which rods extend outward in opposite directions. To the lower end of this arm N are also fastened the two springs Q, which serve to draw the shaft back into position as soon as the tread allows the shaft to move. The outer ends of these connecting-rods are pivoted to the lower ends of the pivoted toothed levers R, which mesh at their upper ends with the pinions placed upon the gates. When the tread is forced downward by the wheels of a car, train, or locomotive, the shaft is made to turn just enough in its bearings to cause the lower end of the arm, which extends downward from its center, to cause the levers R to be moved upon their pivots just far enough to swing the gates open. The teeth formed upon the upper ends of the levers R form the segment of a circle, so that they mesh with the pinions in whatever position they are forced. After the car, train, or locomotive has passed beyond the tread-bar, the springs Q instantly draw the shaft back into position, and this movement of the shaft causes the levers both to close the gates and the tread to rise upward in position again.

The pinion and toothed levers are here shown; but it is evident that many other means may be substituted for the purpose of connecting the levers and the gates. The pinion and toothed levers are, however, preferred, as be-

ing the simplest and least liable to get out of order.

Having thus described my invention, I claim—

The combination of the tread-bar, the jointed levers connected thereto, the partially-rotating shaft provided with arms for connecting with the levers, the arm which projects downward in the center of the shaft, the connecting-rods, which extend in opposite directions, the pivoted levers provided with cogs at their upper ends, the gates provided with pinions, and the springs, which are connected to the lower end of the arm, for the purpose of returning the parts to position, substantially as shown and described.

In testimony whereof I affix my signature in presence of two witnesses.

SAMUEL B. LANGFORD.

Witnesses:

JNO. A. RICHARDSON,

JNO. R. PHIPPS.