Feb. 17, 1953 L. I. YEOMANS 2,628,422

CAN OPENER

Filed Aug. 9, 1949

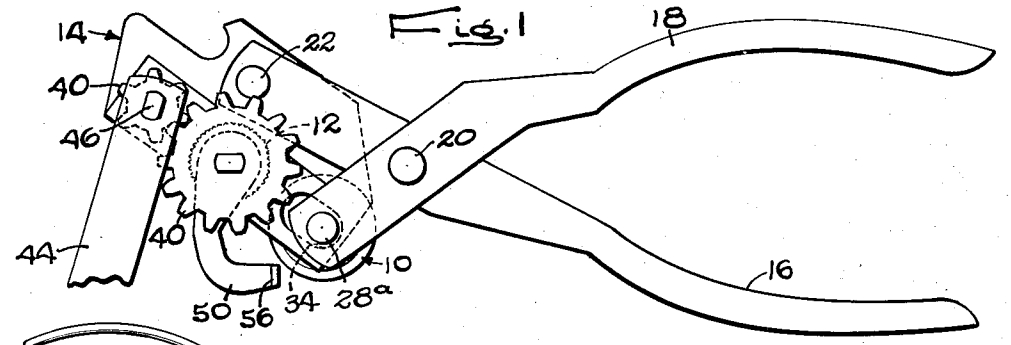

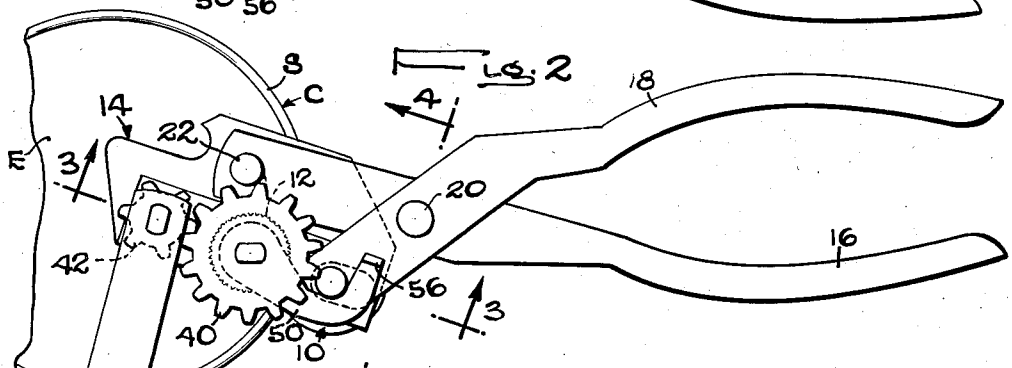

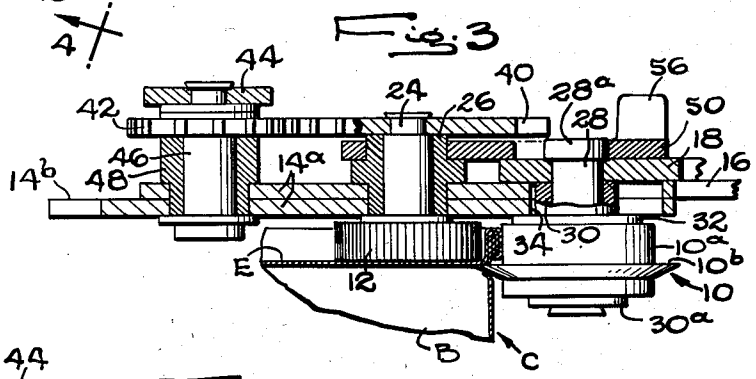

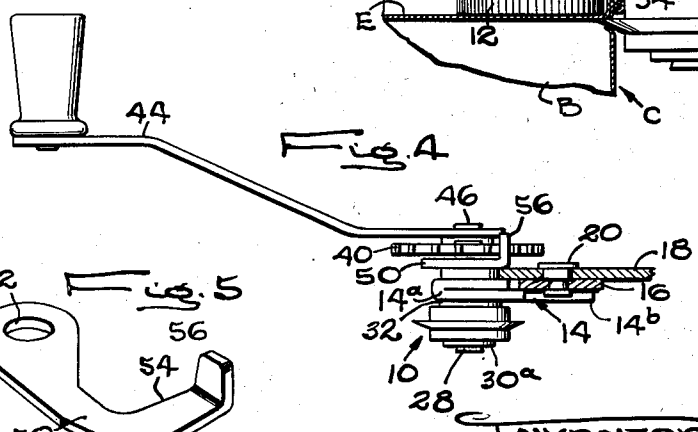

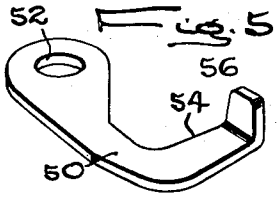

INVENTOR

Lucien I. Yeomans

By: Carlson, Pitzner, Hubbard & Wolfe

ATTORNEYS

Patented Feb. 17, 1953

2,628,422

UNITED STATES PATENT OFFICE

2,628,422

CAN OPENER

Lucien I. Yeomans, Chicago, Ill., assignor to
Mrs. Martha F. Watts, Chicago, Ill.

Application August 9, 1949, Serial No. 109,296

2 Claims. (Cl. 30—15.5)

1

The present invention relates generally to devices for opening cans of the type having an upstanding double seam sealing its body and end walls together. More particularly, the invention relates to can openers in which a rotary cutter or circular shear is adapted to follow the peripheral contour of an ordinary double seam can and sever the material of the body wall thereof immediately below the double seam portion of the closed can for removing the whole end of the can.

It is an object of the invention to provide an improved, portable, manually operable can opener of the aforesaid character for cleanly removing an end of a can regardless of its cross-sectional contour and which effectually clamps the can end and rotates the can while it is resting on a supporting surface without need for the user to maintain a holding force on the handles of the device and is operative to retain the severed can end after its separation until disengagement by the user so as to eliminate the necessity of handling it with the attendant danger of cutting or soiling the user's hands.

The object of the invention thus generally set forth, together with other objects and ancillary advantages, is attained by the construction and arrangement shown by way of illustration in the accompanying drawings, in which:

Figure 1 is a plan view of a can opener incorporating the features of the present invention.

Fig. 2 is a view similar to Fig. 1 but showing the opener applied to a can.

Fig. 3 is a fragmentary vertical section on an enlarged scale taken substantially in the plane of line 3—3 in Fig. 2.

Fig. 4 is a fragmentary vertical section taken substantially in the plane of line 4—4 in Fig. 2.

Fig. 5 is a perspective view of the latch member of the can opener shown in the preceding figures.

Referring more particularly to the drawings, the illustrative embodiment of the present invention includes a cutting disk or circular shear 10 and a serrated feed roller 12 constituting a supporting or complementary shear member which are adapted for engagement with the end of a conventional can C and are effective to remove the same, together with supporting means for both and drive means for the roller. In Figs. 2 and 3 such a can is shown which has a cylindrical body wall B and an end wall E, the two walls being joined in an upstanding double seam S.

In the present instance the supporting means includes a stepped plate 14 having a relatively

2

thick portion 14*a* and a thin portion 14*b* together with a pair of pliers-type handles 16 and 18. The handles are pivotally connected intermediate their ends as by a rivet 20, and the handle 16 is attached at its outer end to the thin plate portion 14*b* by a stud 22 in a manner permitting of limited pivotal movement of the handle with respect to the plate 14.

The serrated feed roller 12 is rigid with the lower end of a shaft 24 which is revolubly journaled in a bearing bushing 26. The latter is held stationary in the thick plate portion 14*a*.

The cutting disk 10 comprises a cylindrical body portion 10*a* having an outwardly extending peripheral shoulder 10*b* intermediate its ends. The shoulder 10*b* has its upper surface disposed in substantially perpendicular relation to the body portion 10*a* and its lower surface disposed at an angle greater than 90° thereto so that the shoulder tapers to a shearing edge. The cutting disk 10 is carried by the outer end of the handle 18. To this end the handle has fixed therein a stud 28 which in turn supports an arbor bushing 30, the handle end being apertured to receive the stud and being clamped between the upper end of the bushing 30 and a head 28*a* formed on the upper end of the stud 28. The disk is constrained against endwise movement between a head 30*a* on the lower end of the bushing and a thrust washer 32 interposed between the disk body 10*a* and the plate 14.

To permit lateral movement of the cutting disk 10 toward and from the feed roller 12, the upper end of the arbor bushing is received in a cam slot 34 formed in the thick portion 14*a* of the plate 14. The slot 34 is straight sided and is of a length sufficient to permit movement of the cutting disk 10 outwardly so that the shearing shoulder 10*b* completely clears the body wall B of the can C. Similarly, the slot 34 extends inwardly an amount sufficient to permit inward movement of the disk 10 so that the upper portion of its body 10*a* can engage the outer surface of the can seam S and clamp the same between it and the serrated feed roller 12. Such inward movement also causes the shearing shoulder 10*b* to be moved toward the body wall of the can. Referring to Figs. 1 and 2 it will be apparent that upon scissoring together of the handles 16 and 18 with the attendant movement of the arbor bushing 30 along the straight-sided cam slot 34 there is produced a slight relative motion between the handles and plate 14. The result of this relative motion is that the cutting disk 10 obliquely engages the body wall B. Further

scissoring together of the handles produces a wedging of the shearing shoulder **10b**, with a slight rolling motion thereof, through the body wall of the can below the double seam S, and adjacent the inner surface of end wall E.

To rotate the serrated feed roller **12** a reduction gearing is employed. Thus fixed to the upper end of the shaft **24** is a driven gear **40** which meshes with a driving gear **42** which is of a smaller diameter, and the latter is adapted to be rotated by a hand crank **44**. To this end, both the driving gear and the crank are fixed adjacent the upper end of a shaft **46** which is rotatably supported in a bearing bushing **48**. The latter is secured in the thick portion **14a** of the plate **14**.

In practicing the present invention, novel means is provided to maintain the cutting disk and feed roller latched in cutting relation to relieve the user of necessity of continuously maintaining a holding force on the handles **16** and **18** in order to keep the feed roller **12** and cutting disk **10** in clamping engagement with the can. In the present instance this means includes a latch member **50** which is supported adjacent the upper end of the fixed bearing bushing **26** and is engageable with the cylindrical head **28a** of the cutting disk supporting stud **28**. The latch member **50** has its inner end enlarged and provided with a hole **52** in which the upper end of the bearing bushing is received and which is of a diameter permitting free swinging of the latch member thereon. Adjacent its outer end the latch member is turned rearwardly so as to provide an arcuate cam or locking edge **54** which is arranged to engage the head **28a** of the stud **23** in any of its operating positions. To permit manual positioning of the latch member **50** it has an upturned fingerpiece **56** rigid with its free end.

Upon inspection of the drawings, it will be noted that rotation of the handle **44** in the normal or clockwise direction will produce a counterclockwise rotation of the driven gear which is mounted adjacent and concentric with the latch member **50**. While clearance is provided between the upper face of the latch member and the lower face of the gear **40**, should the latch member or gear become bent, insufficient clearance be allowed upon fabrication of the opener, or should dirt be allowed to collect between these elements, a drag could be produced. It will be readily appreciated, however, that with the arrangement shown should there be any tendency for drag to occur between the driven gear **40** and the latch member **50** which might tend to move the latter, such movement will be in a direction to maintain the latch in locking engagement with the stud head **28a** thereby minimizing the chance of it becoming loosened accidentally.

Referring particularly to Figs. 1 and 2, it will be seen that with the construction and arrangement illustrated, the instant can opener can be operated with equal facility by either left or right-handed users. Whether the handles **16** and **18** be gripped in either hand the position of the latch member **50** is such that it is always convenient for actuation by the thumb of the hand in which the handles are held. Further, there is no danger of the latch interferring with the operation of the opener or causing the user's hand to be pinched.

It will be apparent that not only is the seamed portion S of the can gripped between the feed roller **12** and the cutting disk **10** during the removal of the can end, but also it is held after the can end has been severed. The latch member **50** must be positively moved into position to release the stud head **28a** in order to free the can end. Thus the user can completely remove the severed can end for its disposal without having to touch it. Consequently, any danger of soiling or injury to the user's hands is avoided.

I claim as my invention:

1. In a circular shear type of opener for cans having a body wall and an end wall sealed together by an upstanding double seam, the combination comprising a stepped plate having a cam slot therein, a pair of pliers-type handles pivotally connected intermediate their ends with the inner end of one pivoted on said plate, a first supporting member fixed adjacent the inner end of the other of said handles and extending through said cam slot, a cutting disk journaled on said supporting member and having a cylindrical body portion and a peripherally disposed shearing shoulder rigid therewith, a second supporting member journaled in said plate, a serrated feed roller rigid with said second supporting member, crank operated reduction gearing including a driven gear element rigid with said second supporting member and effective to drive said feed roller, said feed roller and the body portion of said cutting disk being engageable respectively with the inner and outer surfaces of the cam seam and said shearing shoulder being adapted to penetrate the body wall of the can adjacent to and below the end wall thereof upon scissoring together of said handles, and a substantially L-shaped latch pivoted on one of said supporting members and engageable with the other to maintain said roller and disk in engagement with the can seam.

2. In a circular shear type can opener for cans having a body wall and an end wall sealed together by an upstanding double seam, the combination comprising a plate, a stud movable laterally with respect to said plate, a cutting disk journaled on said stud, a feed roller supported on said plate for rotation about an axis parallel to that of said cutting disk, said feed roller and said cutting disk being engageable respectively with the inner and outer surfaces of the can seam, and a latch member pivoted for movement about the axis of said feed roller and having a cam surface engageable with said cutting disk supporting stud to urge said cutting disk and feed roller toward each other and to maintain the same in engagement wtih the can seam.

LUCIEN I. YEOMANS.

REFERENCES CITED

The following references are of record in the file of this patent:

UNITED STATES PATENTS

Number	Name	Date
1,842,047	Poeppel	Jan. 19, 1932

FOREIGN PATENTS

Number	Country	Date
374,558	Great Britain	June 16, 1932