Nov. 28, 1967 D. W. REED ET AL 3,355,001

SERIAL ON-THE-FLY PRINTER USING A PAIR OF SEQUENTIAL TYPE MEMBER GUIDES

Filed May 16, 1966 3 Sheets-Sheet 1

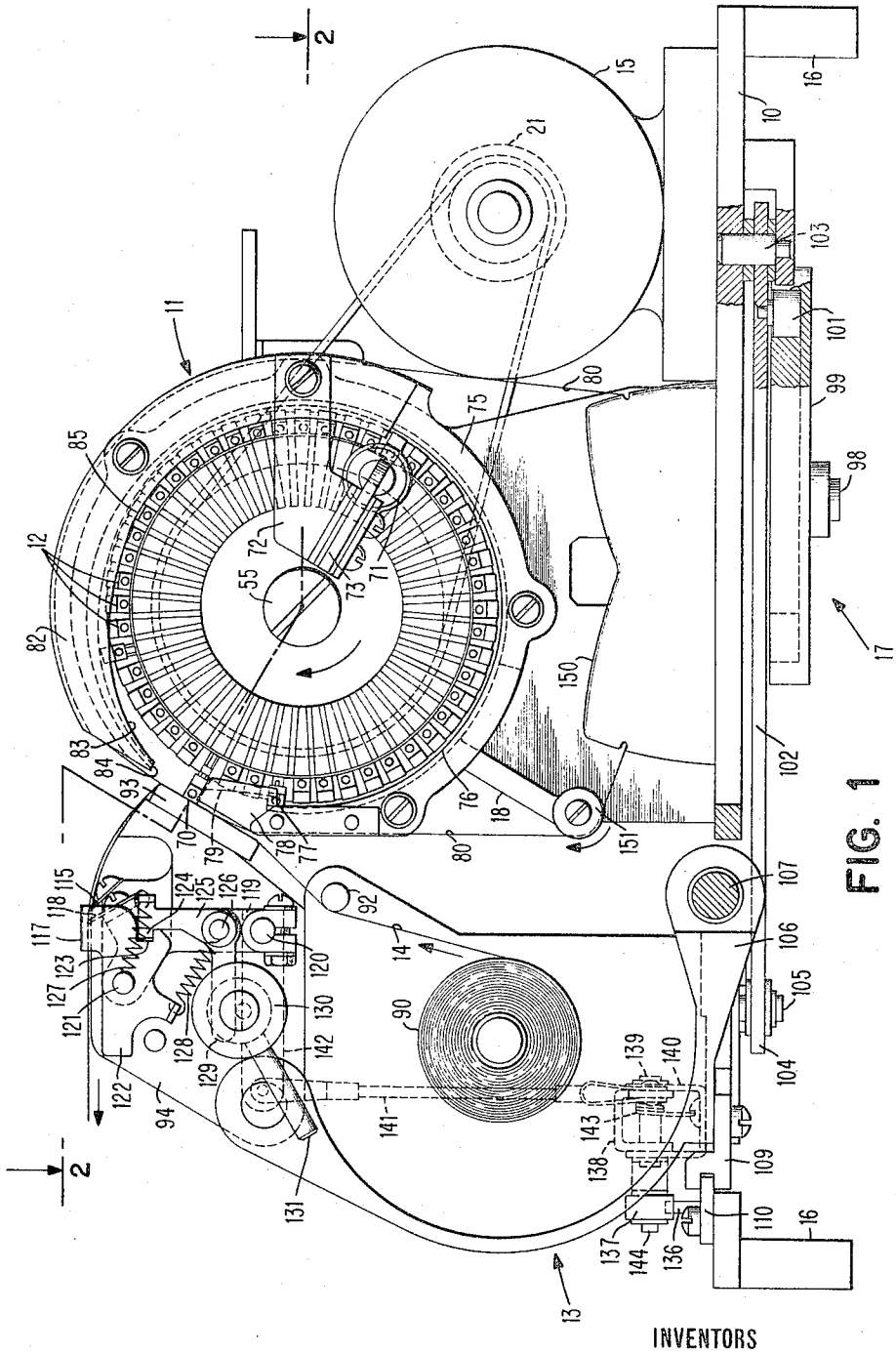

FIG. 1

INVENTORS
DAVID W. REED
VICTOR R. SIMPSON
LARRY D. ZOLNOSKY

BY K. P. Johnson ATTORNEY

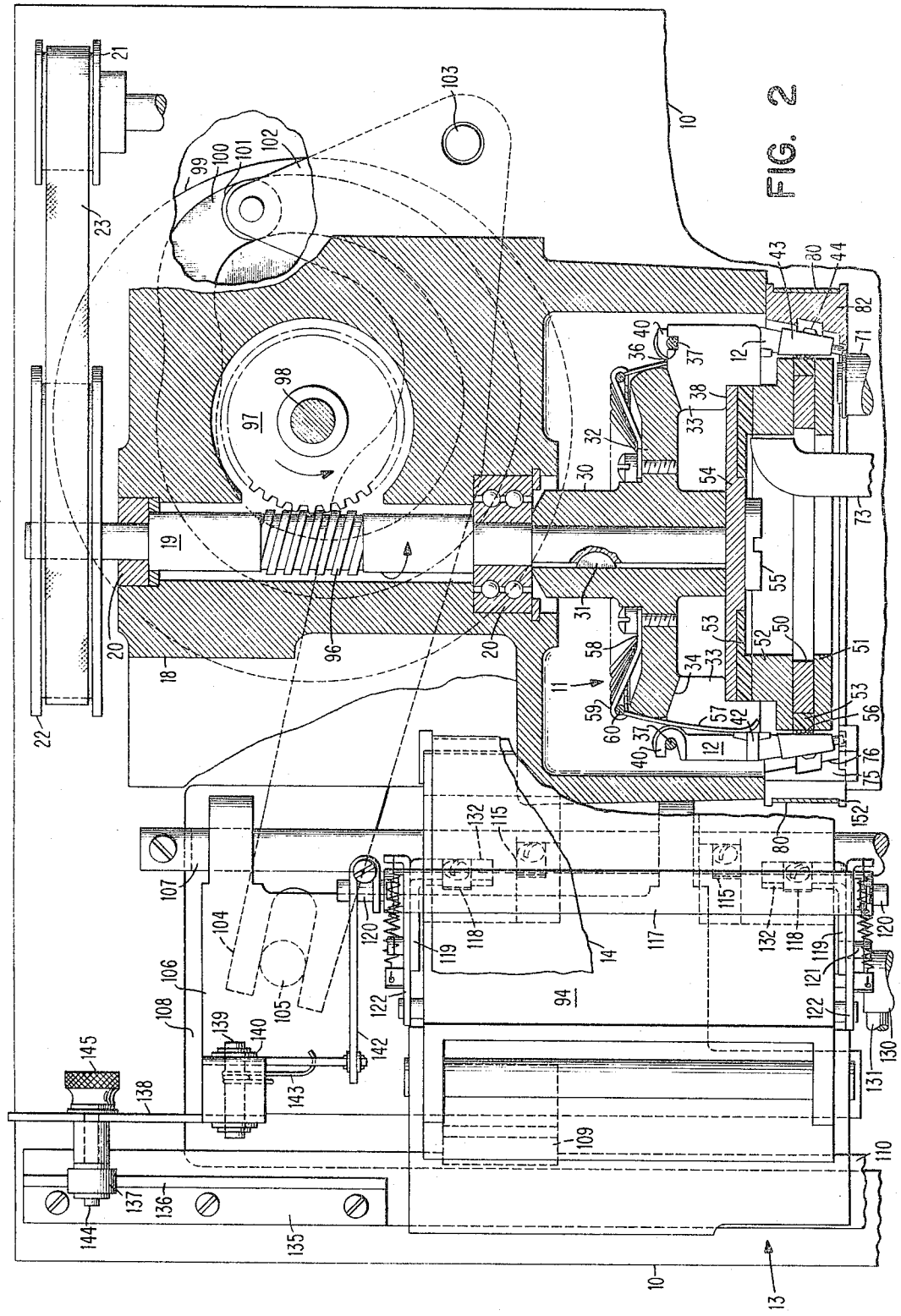

FIG. 2

FIG. 3

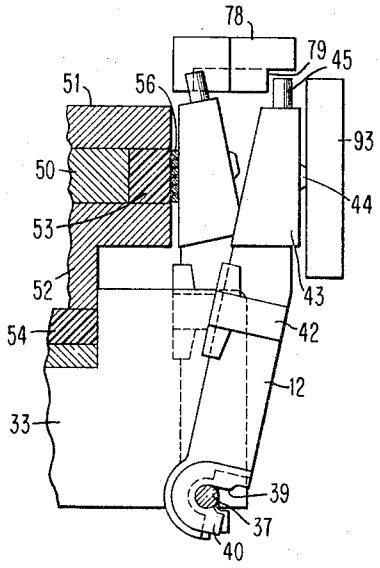

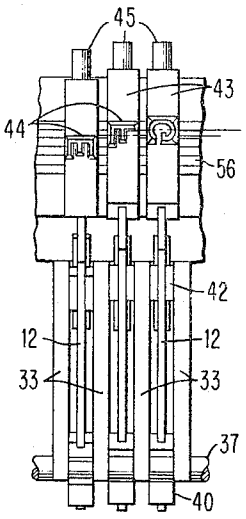

FIG. 4

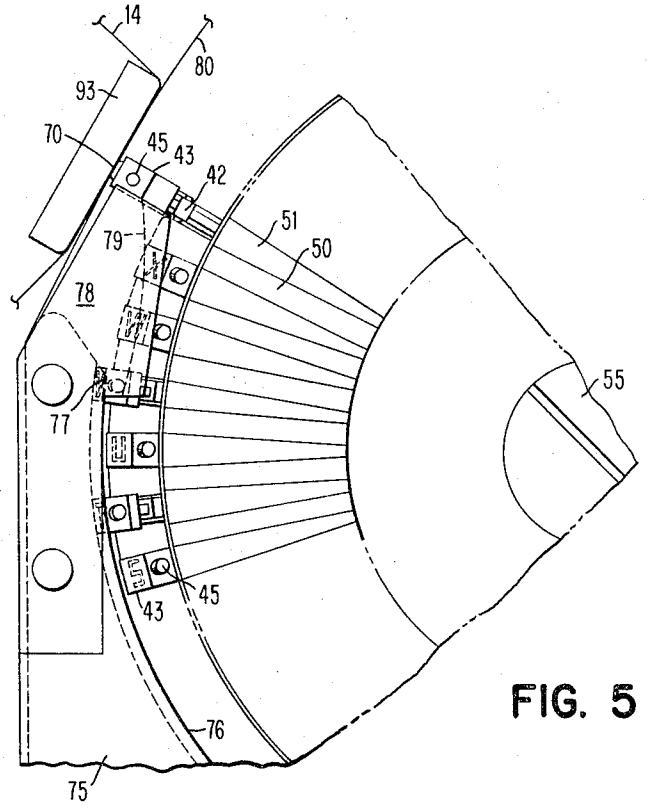

FIG. 5

United States Patent Office

3,355,001

Patented Nov. 28, 1967

3,355,001

SERIAL ON-THE-FLY PRINTER USING A PAIR OF SEQUENTIAL TYPE MEMBER GUIDES

David W. Reed, Endicott, Victor R. Simpson, Owego, and Larry D. Zolnosky, Binghamton, N.Y., assignors to International Business Machines Corporation, Armonk, N.Y., a corporation of New York

Filed May 16, 1966, Ser. No. 550,486
2 Claims. (Cl. 197—18)

ABSTRACT OF THE DISCLOSURE

On-the-fly printing apparatus in which type members are selectively released from a moving carrier and directed by a pair of sequentially effective guide means to a printing location.

This invention relates to a printer apparatus and more particularly to a serial printer in which printing occurs on-the-fly.

While not necessarily limited thereto, the present invention is practiced in a printer device having particular utility as an output apparatus for a teleprocessing system.

Serial on-the-fly printers are known which comprise a continuously moving type carrier, such as a print drum or wheel, that carries movable type elements. The type elements are arranged circumferentially on the drum in a single row so that by rotating the drum, the type elements are presented serially at a print location where a platen supports a record medium. As the drum rotates, the type elements are selectively activated causing them to extend outwardly from the drum in position to impact the record medium at the print location.

In one form of such a printer, centrifugal force is relied upon to effect the displacement of the type elements relative to the drum to effect printing. In such cases, the holding means is provided which retains the type element in a retracted or nonprint position. As the drum rotates relative to the print medium, the particular type elements are advanced by the drum toward the print location and release means, operated in timed relation to the movement of the drum, disengage the type elements in a serial manner from the holding means. Centrifugal force, caused by the rotation of the drum, impels the type elements to fly outwardly to impact the record medium. In a specific type of drum printer the type elements are made with magnetic material, and magnetic devices are used both as holding and release means.

It is readily appreciated that the operation of the release means must be precisely timed and the flight time of the type elements from their nonprint to their print position must be closely controlled in order to get uniformly sharp impressions of the characters at accurately registered position on the record medium. This is particularly true of printer devices where the drums are operating at relatively high rotative speeds. In prior art devices, considerable effort has been made to overcome timing problems by various expedients, all of which require an extreme degree of precision in parts manufacture and assembly. Variations which occur within the bounds of conventional manufacturing tolerances as well as fluctuations and conditions during the operation of the print apparatus seriously affect the quality of performance, resulting in degraded print quality. Further difficulties are to be expected where magnetic type with magnetic holding means and release devices are used.

A principal object of the present invention is to provide a serial on-the-fly printer of the rotatable drum

type in which improved print quality and registration are readily attained.

Further objects of the present invention are to provide a serial on-the-fly drum printer in which magnetic type are used and which have improved magnetic holding and release devices; to provide a printer apparatus of the above type which can be readily adapted to operate at different rotative drum speeds; and to provide a serial on-the-fly printing device having apparatus by which the impact time and impact location of the type members are more accurately controlled.

The foregoing and other objects are attained with the present invention by providing a rotatable support drum having a plurality of type members pivotally mounted thereon and movable from a stored position to a printing position. Means are provided to releasably retain the members in the stored position until a member is released by selectively operable release means. The released type member moves against adjacent guide means and is held in a position between the stored and printing positions after selection. The selected type member moves along the guide means which then serves to direct the type member to the proper print location on a record medium and time the impact of the type member thereon. After impact, restoring means returns the selected member to the carrier for subsequent selection. Biasing means constantly urge the type members away from the carrier means and aid in increasing the impact of the type member on the record medium.

This arrangement advantageously permits the early selection of a type member from the carrier means, allowing the type member to stabilize after selection and before printing occurs. The guide means is thus able to accurately time the point and degree of impact when printing occurs.

The foregoing and other objects, features and advantages of the invention will be apparent from the following more particular description of a preferred embodiment of the invention, as illustrated in the accompanying drawings in which:

FIGURE 1 is an elevation view of the printing apparatus of the invention showing particularly the type members and carrier and record member carriage;

FIGURE 2 is a plan view of the printing apparatus shown partially in cross section along irregular section line 2—2 in FIG. 1;

RIGURE 3 is an enlarged sectional view taken along the line 2—2 in FIG. 1 showing the displacement of a type member at the platen;

FIGURE 4 is an end elevation view of the type members shown in FIG. 3;

FIGURE 5 is an elevation view of an enlarged portion of the type carrier and type members shown in FIG. 1.

Referring to FIGS. 1 and 2, the printing apparatus comprises generally a base plate **10** on which is mounted type carrier means **11** supporting individual type members **12**, carriage means **13** for holding and moving the record medium **14**, and a driving motor **15** supplying power to operate the type carrier means and carriage means. The base plate is substantially rectangular and equipped with legs **16** to provide clearance for a cam mechanism indicated generally as **17** on the underside of the base plate. Secured to the top of the base plate is a support pedestal **18** in which a worm shaft **19** is journaled for rotation in bearings **20**. Drive motor **15** supplies power via pulleys **21**, **22** and belt **23** to rotate shaft **19**.

The type carrier **11** is a cylindrical hub **30** fixed on shaft **19** by key **31** and has a radial flange portion **32** with a plurality of fins **33** formed thereon. The fins form slots **34** in which individual type members **12** are pivotally supported. The base of each fin is provided with a

recess 36 which receives a circular wire ring 37 holding the type members in place. Fins 33 are also formed with an internal recess 38 to provide a seat for a magnet assembly to be described hereinafter.

There is supported on carrier means 11 a type member 12 for each of the plurality of characters to be printed by the apparatus. As shown more clearly in FIGS. 3, 4 and 5, each type member is an elongate element having a base recess 39 in which a bushing 40 of low-friction material is inserted. The bushing is approximately the thickness of the space between adjacent fins 33 and pivots about retainer ring 37. Approximately at the middle of type element 12 there is a guide 42 also of low-friction material which has a width approximately equal to bushing 40 which serves to center the type member as it moves between fins 33. The top of each type member is fitted with a type slug 43 having an embossment 44 in the configuration of the character to be printed by that particular type member. As seen in FIG. 4 the embossments are in the configuration of the characters "E", "F" and "G". Each type member is further provided with a projection 45 which cooperates with guide means, to be subsequently described, for directing the type member to a print or protracted position, when selected.

Each type member is assembled on the carrier means by being placed between a pair of adjacent fins 33, and is held in place by the retaining ring 37. In order to hold the type members in their retracted or stored position, there is provided a magnet assembly comprising a toroidal permanent magnet 50 having a plurality of wedge-shaped outer pole pieces 51 and a corresponding plurality of wedge-shaped inner pole pieces 52 laminated to the magnet. An outer pole piece 51 and an inner pole piece 52 and are aligned on opposite sides of the magnet at each type member position to effect individual flux paths for the type slugs 43. The pole pieces and magnet are secured together and to nonmagnetic support disc 54 by a potting in an epoxy resin 53. The entire assembly is then secured to hub 30 of the type carrier by suitable means such as a screw 55.

A nonmagnetic armature stop 56 provides a predetermined gap in the magnetic flux path between the type members 12 and magnet-pole piece assembly. The gap produces a more uniform atractive force for type slugs 43 and permits sufficient flux leakage to adequately reattract selected type members during reset. Although not limited to that configuration, the armature stop is illustrated as a nonmagnetic wire wound several times about the potting epoxy. The wire convolutions are then ground to present a flat surface.

The type carrier is further equipped with bias springs 57 for each type member and arranged to constantly urge each type member outwardly from the stored position toward the print position. The biasing springs are pivotally mounted in a retainer ring 58 secured to the flange portion 32 on the carrier hub. The retainer ring has a plurality of hook-like fingers 59 in which are inserted the bases 60 of the bias springs 57. The retainer ring can be secured to the flange portion by any conventional means.

Printing is accomplished with the present invention by rotating the type carrier and appropriately selecting the desired type member during one of the revolutions of the type carrier. Upon selection, the type member is released from the magnetic retaining assembly and urged outwardly by centrifugal force and bias springs 57, and released for contact with the record medium at the desired location. After impact the selected type member is then returned to the stored position on the type carrier. Printing thus occurs "on-the-fly" while the carrier is in motion. The rotation of shaft 19 by belt 23 will cause the type carrier to revolve with the shaft carrying each stored type member past record medium 14 having an impact position 70 as shown in FIG. 1.

Type member selection is accomplished by energizing electromagnet 71 which counteracts the flux path through pole piece 51, permanent magnet 50 and pole piece 52 for the particular type member desired. Electromagnet 71 is mounted by means of a bracket 72 to the housing surrounding the type carrier. The core 73 of the electromagnet is preferably no thicker than the width of an individual pole piece 51 for a type member and runs through the coil 71, looping inwardly (FIG. 2) to direct the flux therein toward the inner ends of pole pieces 51, 52. The electrical current through electromagnet 71 is in a direction to oppose the direction of flux in the permanent magnet assembly and selected type slug thus permitting centrifugal force and bias spring 57 to urge type member 12 to pivot outwardly from the carrier means 11. Electromagnet 71 with the core 73 is located in advance of the impact point on the record medium, such as that illustrated as being approximately 180° from the point of impact.

In order to direct the selected type member 12 to the proper point of release, there is provided an arcuate guide 75 having a surface 76 which contacts the type slug 43 on both sides of the embossed character 44 thereon. Guide 75 is substantially concentric with the circumference of type carrier 11 and holds the released type element sufficiently far from the magnetic field of permanent magnet 50 so that the type member remains on the guide 75 and slides therealong on surface 76. The support offered by guide 75 terminates at point 77, as seen in FIGS. 1 and 5, releasing the type member and permitting the centrifugal force and spring 57 to cause the type member to fly outwardly toward the point of impact 70.

Due to friction at the pivot point of each type member and variation in mass of the type member or slug, the free flight time from guide 75 to the point of impact 70 varies from member to member. The direct result is variations in vertical registration in the print line. The variations are overcome by providing a supplemental cam 78 having surface 79 which engages projection 45 on the selected type member to direct it to the impact point. The supplemental cam guide 78 extends partially over the stored type members on the carrier means 11 but is spaced therefrom so that the projections 45 to unselected type members clear the cam 78 without interference. However, upon selection and release of a type member to guide 75, its projection 45 moves outwardly a sufficient distance to engage cam surface 79 whereby the type member is positively directed to the point of impact. When impact occurs, the selected type member thrusts an inking ribbon 80 against record medium 14 thereby causing an impression of the character to be placed on the record medium.

In order to reset or return the selected type member to carrier means 11 after impact, a reset ramp 82 engages type slug 43 on both sides of the embossed character 44. The tip 84 of the reset ramp extends sufficiently near the point of impact so that, upon rebound from the record medium and ribbon, the type slug engages ramp surface 83. Surface 83 is formed to gradually bring the selected type member within the magnetic field of the permanent magnet 50 and the pole pieces where it assumes once again the stored position, approximately at point 85.

The advancement and positioning of record member 14 during printing is accomplished by cam mechanism 17 under base plate 10. As seen in FIG. 1, record member 14 is fed from supply spool 90 in the direction of the arrows over guide 92, platen 93, and the surface of support block 94. During the printing of a line of information, carriage means 13 is moved continuously relative to the type carrier from top to bottom in FIG. 2. Upon completion of a line of print, the carriage means is returned upward to the position shown. The reciprocating carriage motion is derived from worm 96 on rotating

print carrier shaft **19** and engages gear **97** on shaft **98**. The gear may be fixed on shaft **98** or be freely rotatable thereon and secured instead to a conventional single-revolution clutch (not shown) which would permit stopping the carriage when printing is not being done. When the drive gear **97** is clutch controlled, the carriage is started when printing is to occur and can be stopped at either extreme of carriage travel.

Assuming merely for purposes of description that gear **97** is fixed on shaft **98**, then the shaft is rotated in the direction of the arrow and also rotates cam **99** under base plate **10**. As seen in FIG. 2, the cam has a recessed track **100** in which roller **101** rides. The roller is freely rotatable on follower arm **102** that is pivotally mounted on shaft **103** fixed in base plate **10**. The rotation of cam **99** thus causes the bifurcated outboard end **104** of the follower arm **102** to sweep an arc having its center at pivot **103**. End **104** engages pin **105** fixed in carriage base **106** and reciprocates the carriage on shaft **107** secured across an opening **108** in the base plate. A rear supporting guide is provided on carriage base **106** by bifurcated slide **109** in engagement with aligner bar **110**. It is thus seen that, as shaft **98** is rotated, cam **99** thereon causes carriage base **106** to reciprocate relative to both base plate **10** and type carriage **11** and, in so doing, continuously expose a new printing location at impact position **70** on record medium **14**. Cam track **100** is formed to move the carriage means slowly downward in FIG. 2 at a uniform rate and, upon return, to restore upwardly in approximately one third of the time required for full downward travel. When the carriage is operated with a single-revolution clutch coupling gear **97** and shaft **98**, it is preferable to disengage the clutch when the carriage is at the lower extreme of travel so that the print line is fully exposed.

Carriage means **13** is actuated to advance record member **14** one printing line each time the carriage is returned to the position shown in FIG. 2. During printing, the record member is held in place by stationary blades **115** secured by screws to support block **94**. The blades are of a material having some resiliency, such as spring steel, and are located in recesses in the support block under record member **14**. The blades angularly engage the record member to permit the advancement of record member **14** but pinch the record member against feed bar **117** to prevent reverse movement.

The record paper is advanced by the gripping action of feed blades **118** against the feed bar **117**. The feed bar is supported at each end for reciprocation on vertical arms **119** fixed on rotatable shaft **120**. Each arm **119** has a pin **121** secured therein on which downwardly bent ear portion **122** of the feed bar is pivotally supported. The ear portion is formed with a notch **123** that is engaged by tooth **124** of bell crank **125**. The bell crank is pivotally supported on pin **126** also on arm **119**. Spring **127** urges tooth **124** into the notch so that the feed bar is held in the position shown in FIG. 1. Spring **128** urges the feed bar to rotate about pivot **121** when tooth **124** is removed from the notch. End **129** of bell crank **125** rests in a depression in rotatable hub **130** so that when the handle **131** is moved clockwise, end **129** is cammed upward against the force of spring **127** to withdraw tooth **124** from the notch **123**. This opens the feed bar for insertion of the paper.

Feed blades **118** are supported on ears **132** on vertical arm **119**. As vertical arm **119** moves clockwise on shaft **120**, stationary blades **115** in conjunction with feed bar **117** engage and hold the record member from moving. Because of the angle of feed blade **118** relative to the record member, the feed blades slide easily on the paper. The feed bar is moved clockwise a distance equivalent to a line space, and subsequently counterclockwise to advance the record member by gripping the paper between the feed blades **118** and feed bar **117**. The feed bar is not moved sufficiently in either direction to pass beyond stationary blades **115**.

The required reciprocating motion is imparted to shaft **120** and vertical arms **119** by the movement of carriage means **13** along shaft **107**. Referring to FIG. 2, there is secured to base plate **10** a bracket **135** providing a ramp **136**. The ramp is engaged by a roller **137** on arm **138** which pivots on pin **139** supported in bracket **140**. The bracket is rigidly fastened to carriage base **106**. The motion of arm **138** is transferred (FIG. 1) by link **141** to lever **142** secured to shaft **120**. As the carriage means moves down during printing in FIG. 2, roller **137** rolls down ramp **136** allowing spring **143** to urge link **141** up in FIG. 1. This causes lever **142** to rotate shaft **120** and, hence, feed bar **117** in the clockwise direction in FIG. 1. The feed bar remains at its clockwise extreme until the carriage is restored, at which time roller **137** engages ramp **136** to cause link **141** to move lever **142** counterclockwise and advance the feed bar and record member **14** also counterclockwise. It will be noted that feed bar **117** can be used as a tear bar, if desired. Support shaft **144** for roller **137** is adjustably mounted by knurled knob **145** to permit variation of the line spacing.

Ink ribbon **80** is illustrated in FIG. 1 as the type having supply and take-up reels in a unitary cartridge **150**. The ribbon is fed in the direction of the arrow about idler **151** over the exterior of guide **75**, over reset ramp **82** and to a take-up spool in cartridge **150**. The ribbon moves over the guide and reset ramp in a recess **152**. The ribbon can be advanced by any well-known incrementing mechanism, and the mechanism can be driven from rotating shaft **98**.

During operation, type member selection is preferably limited to one character per revolution of the type carriage means **11** because of possible over-printing. Carriage means **13** moves at a constant rate during its progression from top to bottom in FIG. 2. The movement is synchronized with the carrier rotation and equals, in one revolution of the type carrier, the character center-to-center distance desired. In order to further provide character spacing and permit random selection, the characters are helically arranged about the carrier as illustrated in FIG. 4 by the characters on type elements **43**. It is seen that the horizontal centers of the "G" and "F" are displaced from one another. The amount of displacement of adjacent characters is equal to the character center-to-center distance on record **14** divided by the number of type elements on the carrier. Type element "E" is shown forward in the printing position at impact time.

While the invention has been particularly shown and described with reference to a preferred embodiment thereof, it will be understood by those skilled in the art that various changes in form and details may be made therein without departing from the spirit and scope of the invention.

What is claimed is:

1. In a device for printing on a record medium, the combination comprising:

rotary type carrier means having a plurality of type members pivotally supported thereon and each movable from a stored position to a print position;

means for rotating said carrier to urge said type members outwardly from said carrier by centrifugal force and move said members successively past a printing location on said record medium;

means in addition to said centrifugal force for continuously biasing each said type member outwardly from said carrier;

means on said carrier for producing a force holding each said type member in said stored position;

means operable to counteract said holding force and selectively release said type members from said holding means;

first guide means adjacent said carrier means for receiving released ones of said members and providing a force in a direction opposite to said centrifugal

force and said biasing means for restraining said members in a position intermediate said stored and print positions; and

second guide means operable at the termination of said first guide means for applying an outward force in the same direction as said centrifugal force and said biasing means to direct said members in said intermediate position to said print position at said printing location.

2. Apparatus as described in claim **1** wherein:

said biasing means includes an individual spring acting against each said member;

said holding means includes a magnet having individual pole pieces for providing an individual magnetic flux path for each said type member; and

said release means includes an electromagnet arranged relative to said magnet to counteract the holding flux of said magnet when said electromagnet is energized.

References Cited

UNITED STATES PATENTS

904,743	11/1908	Weston	197—18 XR
2,202,784	5/1940	Olney	197—53 XR
2,369,433	2/1945	Casey	197—18 XR
2,613,796	10/1952	Prouty	197—12
2,843,243	7/1958	Masterson	197—12 XR
3,289,805	12/1966	Kleinschmidt et al.	197—18
3,155,033	11/1964	Nelson et al.	101—93
3,188,946	6/1965	Schacht	101—93
3,215,246	11/1965	Zawaboni	197—48 XR

ROBERT E. PULFREY, *Primary Examiner.*

E. S. BURR, *Examiner.*