(12) UK Patent (19) GB (11) 2 280 883 (13) B

(54) Title of Invention

# Device for preventing swinging of a hung load

(51) INT CL[6]; **B66C 13/06**

(21) Application No
**9421439.2**

(22) Date of filing
**04.03.1994**

(30) Priority Data

(31) **05044928**

(32) **05.03.1993**

(33) **JP**

(86) International Application Data
**PCT/JP94/00353**
**Jp 04.03.1994**

(87) International Publication Data
**WO94/20403**
**Jp 15.09.1994**

(43) Application published
**15.02.1995**

(45) Patent published
**01.05.1996**

(72) Inventor(s)
**Yoshiaki Okubo**
**Koichi Inoue**

(73) Proprietor(s)
**Mitsubishi Jukogyo**
**Kabushiki Kaisha**

**(Incorporated in Japan)**

**5-1 Marunouchi 2-chome**
**Chiyoda-ku**
**Tokyo 100**
**Japan**

(74) Agent and/or
Address for Service
**W P Thompson & Co**
**Coopers Building**
**Church Street**
**Liverpool**
**L1 3AB**
**United Kingdom**

(52) Domestic classification
(Edition O)
**B8B** BCDL
**U1S** S1793

(56) Documents cited
**JP530145257 A**
**JP010083785 U**
**US4687110 A**

**(continued on next page)**

**GB 2 280 883 B - continuation**

(58) Field of search

As for published application 2280883 A *viz:*
INT CL[5] **B66C 13/06 13/08 13/22**
updated as appropriate

Additional Fields
UK CL(Edition N) **B8B BCDL BDM BEF**
INT CL[6] **B66C**

FIG.1

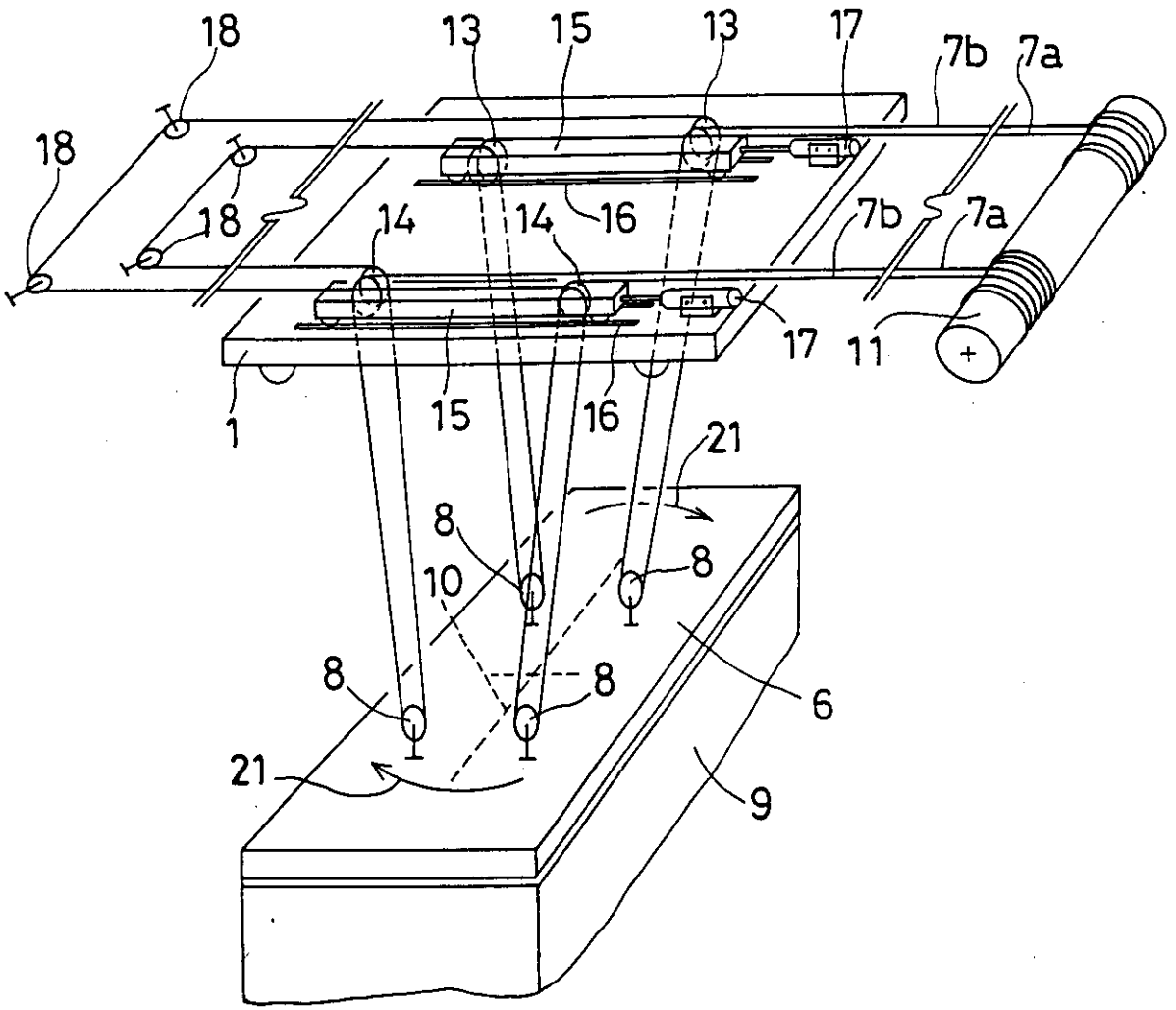

FIG.2

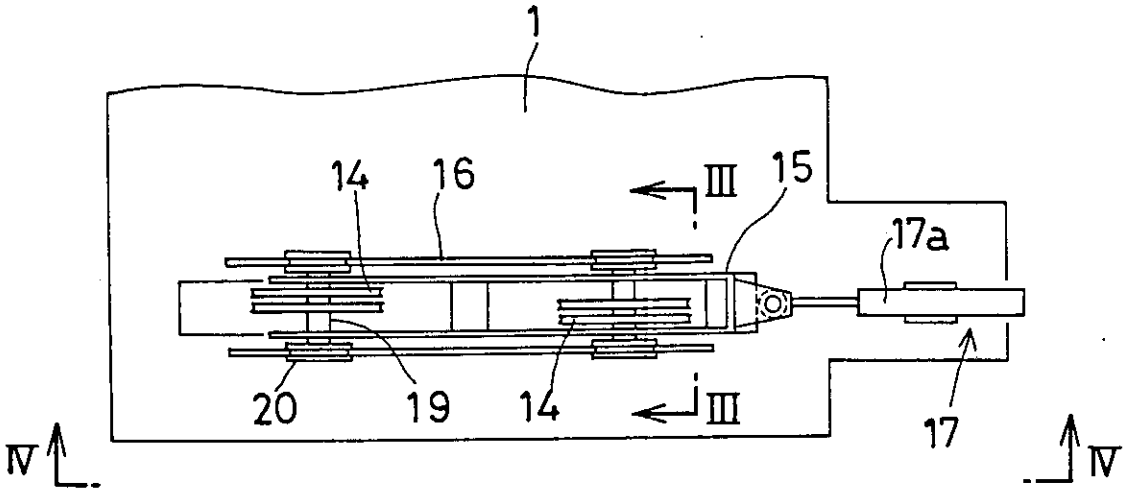


FIG.3

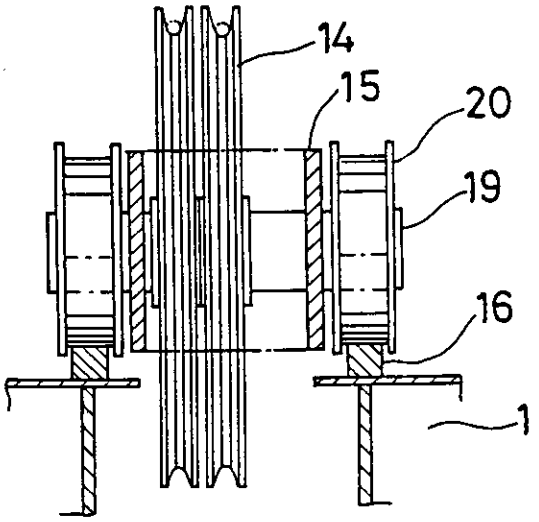

FIG.4

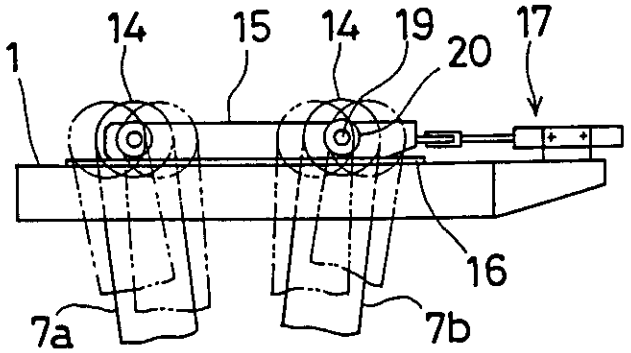


FIG.5

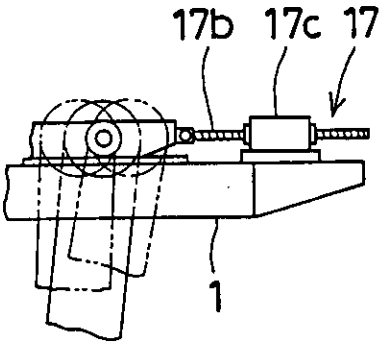


FIG.6

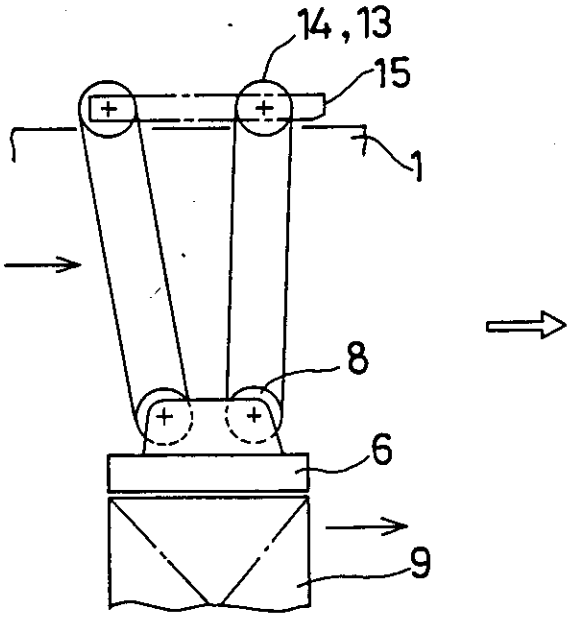


FIG.7

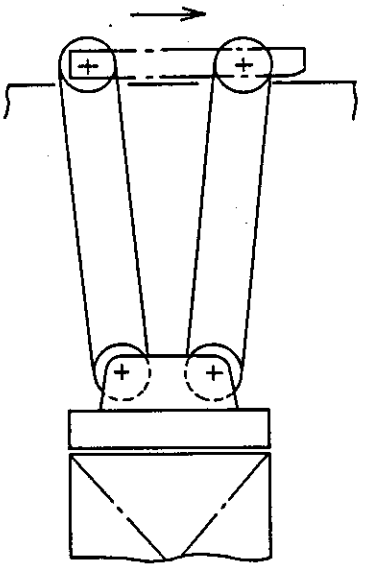

FIG.8

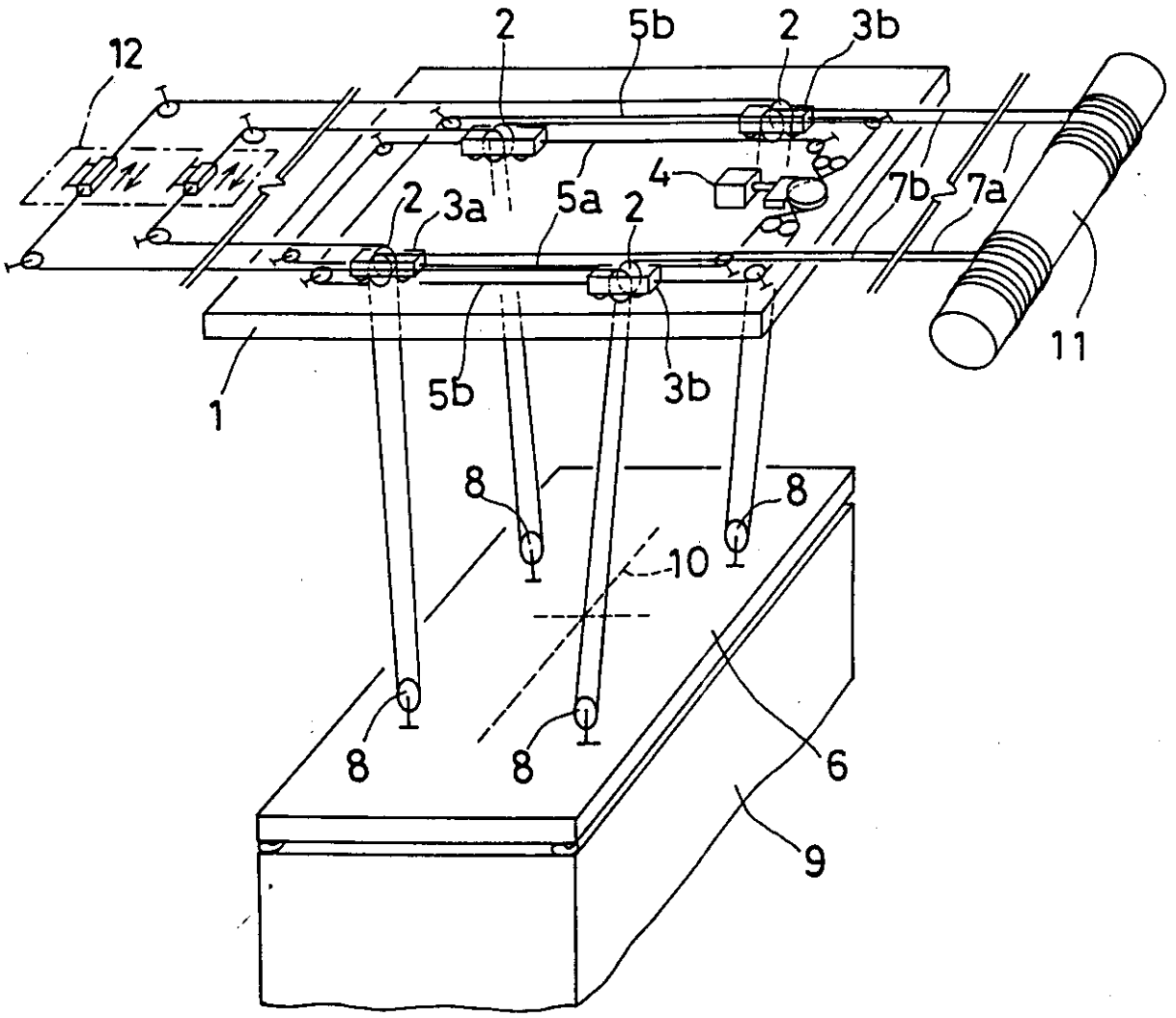

# DESCRIPTION

The present invention relates to an apparatus for reducing oscillations of hoisted cargo that is particularly applicable to a container crane for a large size cargo.

A conventional apparatus for stopping oscillations of hoisted cargo which is used in a container crane is shown in Fig. 8. The conventional swing stopping apparatus comprises a transversely movable trolley 1 movable on a main girder (not shown) of the crane in the right and left directions facing Fig. 8 and four sets of guide sheaves 2. The guide sheaves 2 are provided on movable frames 3a and 3b, respectively. The movable frames 3a and 3b are provided on the transversely movable trolley 1 and transversely moved by drive means 4 for opening and closing the space between the movable frames 3a and 3b. When there occurs a transverse swing of a hoisting accessory, the frames 3a and 3b are moved toward and away from each other through ropes 5a and 5b by the drive means in order to stop the transverse swing.

A container 9 is supported by a hoisting plate 6 hoisted and supported by hoisting ropes 7a and 7b through sheaves 8 mounted on the plate 6 and the guide sheaves 2. A mark 10 is drawn on the hoisting plate for detection of swing by the eye.

The hoisting ropes 7a and 7b are hoisted by a hoisting drum 11 disposed on the crane. A skew stopping unit for stopping skew (swivel swing in a horizontal plane) of a hoisted cargo is denoted by reference numeral 12 and comprises reciprocating cylinders provided in intermediate portions of the hoisting ropes 7a and 7b.

When the container 9 is hoisted by the hoisting plate 6 and the trolley 1 is transversely moved, for example, from a land side to a sea side, the hoisting plate 6 is swung in the direction of movement because of acceleration and deceleration of the trolley 1. If there occurs a swing of the hoisting plate 6, the space between the movable frames 3a and 3b is opened by manipulation of the drive means 4 by a crane operator monitoring the swing visual-detection mark 10 drawn on the hoisting plate 6. As a consequence, the swing of the hoisting plate 6 is attenuated.

If there occurs a skew (swivel swing in a horizontal plane) of the hoisting plate 6, the hoisting ropes of the sheaves 8 on the rear side of the skew motion are pulled and the hoisting ropes of the sheaves 8 on the front side of the

skew motion are loosed with the skew stopping unit 12, so that the skew of the hoisting plate 6 is stopped.

Since in the conventional apparatus the drive means 4 and the skew stopping unit 12 are operated separately, the transverse swing and skew of the hoisting plate 6 (and hoisted cargo) can be stopped individually. However, if the transverse swing and the skew occur at the same time, manipulations for stopping skew motion often do not synchronize with manipulations for stopping transverse motion, and therefore the transverse swing and the skew cannot be prevented effectively in such cases.

It is an object of the present invention to simplify the apparatus for stopping transverse skew and swing and provide an apparatus for stopping the transverse swing and skew of hoisted cargo which is capable of concurrently stopping such transverse swing and skew with reliability.

The present invention provides an apparatus for stopping oscillation of a hoisted cargo, comprising a trolley movable along a main girder of a crane, a pair of movable frames which are disposed on the trolley parallel to the direction of movement of the trolley and which are movable on the trolley in said direction of movement of the trolley, two sets of guide sheaves for hoisting ropes fixedly arranged on each of said pair of movable frames with a predetermined fixed distance between the sets, and a pair of drive means disposed on said trolley for moving said pair of moving frames independently with respect to said trolley.

Because the two sets of driving means operate to move the movable frames independently of the movement of the trolley, any transverse swing of the hoisted cargo is stopped by moving the movable frames concurrently with the transverse swing of the hoisted cargo and wherein any skew of the hoisted cargo is stopped by moving the movable frames in opposite directions concurrently with the skew of the hoisted cargo. That is to say, a single apparatus can simultaneously attenuate the two motions of skew and swing. Therefore, even if skew and swing motions occur at the same time, a control quantity that reflects a sum of amplitudes of skew and swing motions is used to operate the two sets of driving mechanisms in the single apparatus for stopping oscillations, so as to easily and securely control two different oscillations at once and in combination. Accordingly, the apparatus according to the present invention is simple in structure and easy in control, and is capable of concurrently stopping transverse swing and skew with reliability.

The invention is described further hereinafter, by way of example only, with reference to the accompanying drawings, in which:-

FIG. 1 is a schematic view illustrating an apparatus for stopping oscillations of hoisted cargo according to one embodiment of the present invention;

FIG. 2 is a plan view illustrating the movable frame and the drive means of FIG. 1;

FIG. 3 is an enlarged sectional view taken substantially along line III-III of FIG. 2;

FIG. 4 is a side view taken substantially along line IV-IV of FIG. 2;

FIG. 5 is a side view showing another embodiment of the drive means of FIG. 4;

FIGS. 6 and 7 are side elevational views for explaining how oscillations of hoisted cargo may be stopped according to the present invention; and

FIG. 8 is a schematic view illustrating a conventional apparatus for stopping oscillations of hoisted cargo.

Referring to Figs. 1-7, there is shown a preferred embodiment of an apparatus for stopping oscillations of hoisted cargo in accordance with the present invention. Because the parts to which the same reference numerals as Fig. 8 are applied are identical to corresponding parts of Fig. 8, a detailed description of the identical parts will not be given.

Fig. 1 shows an apparatus for stopping an oscillation of hoisted cargo which may be used in a container crane. In the figure, reference numerals 13 and 14 denote two pairs of guide sheaves respectively provided on the two sides of a transversely movable trolley 1. The guide sheaves 13 and 14 are fixedly supported by movable frames 15. The two guide sheaves 13 are arranged with a predetermined spacing, and likewise the two guide sheaves 14 are arranged with the predetermined spacing. The two movable frames 15 are movable on and along rails 16, which are mounted on the two side edges of the transverse trolley 1, respectively. Reference numerals 17 denote drive means which are mounted on the transverse trolley 1 so that the movable frames 15 can be separately moved on the rails 16 with respect to the transverse trolley 1. An inner hoisting rope 7a extends from the hoisting drum 11 to the left-hand guide sheave 13 and passes over a sheave 8 mounted on the hoisting plate 6 and returns back to the left-hand guide sheave 13. The inner hoisting rope 7a further passes over two inner equalizer sheaves 18, the left-hand guide sheave 14 and a further sheave 8 mounted on the hoisting plate 6, and returns back to the hoisting drum 11 via the left-hand guide sheave 14. Likewise, an outer hoisting rope 7b extends from the hoisting drum 11 to the right-hand guide sheave 13 and passes over a further sheave 8 mounted on the hoisting plate 6 and returns back to the right-hand ...

guide sheave 13. The outer hoisting rope 7b further passes over outer equalizer sheaves 18, the right-hand guide sheave 14 and a still further sheave 8 mounted on the hoisting plate 6, and returns back to the hoisting drum 11 via the right-hand guide sheave 14.

Fig. 2 is a plan view illustrating the two guide sheaves 14 and the associated movable frame 15, and Fig. 3 is an enlarged sectional view taken substantially along line III-III of FIG. 2. The two guide sheaves 14 are freely rotatably supported on one end of a first shaft 19 and on the other end of a second shaft 19 of the movable frame 15 so that the hoisting ropes 7a and 7b on the guide sheaves 14 do not interfere with each other.

The movable frame 15 is freely movable on the rail 16 by wheels 20 rotatably supported on the two ends of the shaft 19 supporting the guide sheave 14. In this embodiment, the drive means 17 comprises a hydraulic cylinder 17a, and the rear end of the movable frame 15 is connected to the drive end of the hydraulic cylinder 17a mounted on the transverse trolley 1.

As shown in Fig. 4, the movable frame 15 is movable forward and backward, for example, between 0 and 250 mm and between 250 and 0 mm by the drive means 17.

It is noted that the drive means 17 may comprise other drive mechanisms or other drive sources than a hydrau-

lic source. For example, the drive means 17 may comprise a ball screw 17b connected to the movable frame 15 and a screw feed motor 17c, as shown in Fig. 5.

The operation of the apparatus for stopping an oscillation of hoisted cargo according to Figs. 1 to 4 will now be described. If it is assumed that the transversely movable trolley 1 in the position of Fig. 1 is transversely moved from left to right, the hoisting plate 6 is swung forward because of a force of inertia, particularly when the transverse trolley 1 is decelerated. This transverse swing is detected by a crane operator monitoring a swing visual-detection mark 10 marked on the hoisting plate 6. If such transverse swing is detected, the two drive means 17 mounted on the two side edges of the transverse trolley 1 are driven concurrently with the occurrence of the transverse swing, and the movable frames 15 are moved in the direction of the transverse swing, as shown in Fig. 7. The movable frames 15 are further moved in the opposite direction concurrently with a reaction of the hoisting plate 6, so that the transverse swing can be attenuated and stopped in a short period of time.

When, as indicated by an arrow 21 in Fig. 1, a skew (swivel swing) of the hoisting plate 6 occurs in a horizontal plane in a clockwise direction, the skew is likewise detected by movement of the mark 10 and the two drive means 17 are

driven so that one side frame 15 is moved to the left and the opposite side frame 15 is moved to the right. That is, the two frames 15 are moved so as to follow the clockwise movement of the hoisting plate 6. With respect to a reaction of the skew, the frames 15 are moved in the opposite directions. As a consequence, the skew can also be attenuated and stopped in a short period of time.

When the transverse swing and the skew occur at the same time, a quantity of the transverse swing and a quantity of the skew are added at the left and right-hand sides of the transverse trolley 1, and the two frames 15 are respectively driven and moved in requisite directions by the added quantity. Since the control quantity required for the control of the transverse swing and the skew is supplied synchronously, a transverse swing and skew different from each other can be attenuated and stopped concurrently and reliably.

The aforementioned manipulation and control can also be performed automatically by providing a camera on the transverse trolley 1. The transverse swing and skew of the hoisting plate 6 are detected with the camera, and a control quantity corresponding to the transverse swing and skew of the hoisting plate 6 is calculated in a control unit by picture processing. By automatically moving the two frames 15 in accordance with the calculated control quantity,

the transverse swing and skew of the hoisting plate 6 can be automatically attenuated and stopped.

In accordance with the present invention, the number of the movable frames compared to the initially-described conventional apparatus is reduced by half and the manipulation of the movable frames at the time of stopping the transverse swing and the skew is simplified. Furthermore the distance of movement of the movable frames is small. In addition, the transverse swing and the skew are both stopped by only the control of movement of the movable frames. Accordingly, the apparatus for stopping oscillations of hoisted cargo according to the present invention is simple in structure and easy in control, and is capable of concurrently stopping transverse swing and skew with reliability. Therefore, the present invention has very useful industrial applications.

---

CLAIMS

1. An apparatus for stopping oscillation of a hoisted cargo, comprising a trolley movable along a main girder of a crane, a pair of movable frames which are disposed on the trolley parallel to the direction of movement of the trolley and which are movable on the trolley in said direction of movement of the trolley, two sets of guide sheaves for hoisting ropes fixedly arranged on each of said pair of movable frames with a predetermined fixed distance between the sets, and a pair of drive means disposed on said trolley for moving said pair of moving frames independently with respect to said trolley.

2. An apparatus as claimed in claim 1, wherein each of said pair of drive means comprises a hydraulic cylinder.

3. An apparatus as claimed in claim 1, wherein a transverse swing of said hoisted cargo is arranged to be stopped by simultaneously moving said movable frames in the same direction concurrently with said transverse swing of said hoisted cargo, and wherein a skew motion of said hoisted cargo is arranged to be stopped by simultaneously moving said movable frames in opposite directions concurrently with said skew motion of said hoisted cargo.

4. An apparatus as claimed in claim 1, wherein a camera is disposed on said movable trolley, said camera being arranged to detect motion of said hoisted cargo, an image from said camera being image processed for

calculating a control quantity corresponding to the detected motion, and said movable frames being arranged to be automatically controlled in respect of their movement based on said control quantity.

5. An apparatus for stopping oscillation of a hoisted cargo, substantially as hereinbefore described with reference to and as illustrated in Figures 1 to 7 of the accompanying drawings.

---

REGISTER ENTRY FOR GB2280883

Form NP1 Application No GB9421439.2 filing date 04.03.1994

Lodged on 25.10.1994

Priority claimed:
05.03.1993 in Japan - doc: 05044928

PCT NATIONAL PHASE
PCT Application PCT/JP94/00353 filed on 04.03.1994 in Japanese
Publication No WO94/20403 on 15.09.1994 in Japanese

Title DEVICE FOR PREVENTING SWINGING OF A HUNG LOAD

Applicant/Proprietor
MITSUBISHI JUKOGYO KABUSHIKI KAISHA, Incorporated in Japan, 5-1 Marunouchi 2-chome, Chiyoda-ku, Tokyo 100, Japan [ADP No. 00608372001]

Inventors
YOSHIAKI OKUBO, MITSUBISHI JUKOGYO KABUSHIKI KAISHA, Hiroshima R&D Centre, 6-22 Kan-on-Shinmachi 4-chome, Nishi-ku, Hiroshima-shi, Hiroshima-ken 733, Japan [ADP No. 06663561001]

KOICHI INOUE, MITSUBISHI JUKOGYO KABUSHIKI KAISHA, Hiroshima R&D Centre, 6-22 Kan-on-Shinmachi 4-chome, Nishi-ku, Hiroshima-shi, Hiroshima-ken 733, Japan [ADP No. 06663579001]

Classified to
B8B U1S
B66C

Address for Service
W P THOMPSON & CO, Coopers Building, Church Street, LIVERPOOL, L1 3AB, United Kingdom [ADP No. 00000158001]

Publication No GB2280883 dated 15.02.1995

Examination requested 25.10.1994

Patent Granted with effect from 01.05.1996 (Section 25(1)) with title DEVICE FOR PREVENTING SWINGING OF A HUNG LOAD

---

**** END OF REGISTER ENTRY ****

RENEWAL DETAILS

PUBLICATION NUMBER GB2280883

PROPRIETOR(S)

Mitsubishi Jukogyo Kabushiki Kaisha, Incorporated in Japan, 5-1 Marunouchi 2-chome, Chiyoda-ku, Tokyo 100, Japan

DATE FILED 04.03.1994

DATE GRANTED 01.05.1996

DATE NEXT RENEWAL DUE 04.03.1998

DATE NOT IN FORCE

DATE OF LAST RENEWAL

YEAR OF LAST RENEWAL 00

STATUS PATENT IN FORCE

**** END OF REPORT ****