July 10, 1928. 1,676,879

P. WALLIN

GAUGING MACHINE

Filed Sept. 22, 1926 4 Sheets-Sheet 1

Fig. 1

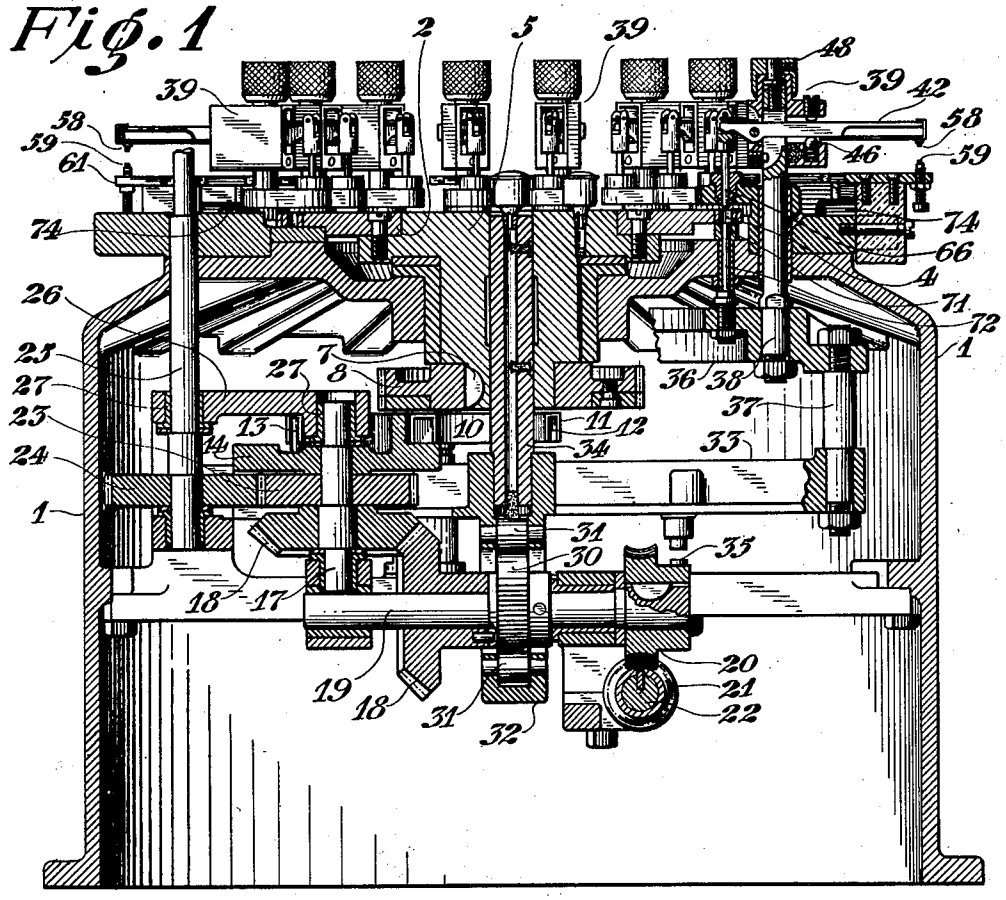

Fig. 2

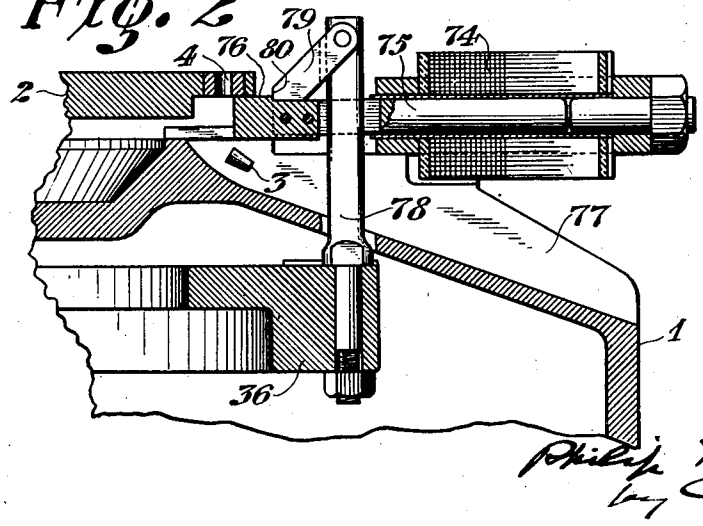

Fig. 3

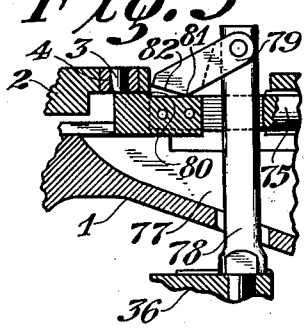

Inventor:

Philip Wallin

by Cameron & Cameron

his Attorneys.

July 10, 1928. 1,676,879

P. WALLIN

GAUGING MACHINE

Filed Sept. 22, 1926 4 Sheets-Sheet 2

Fig. 4

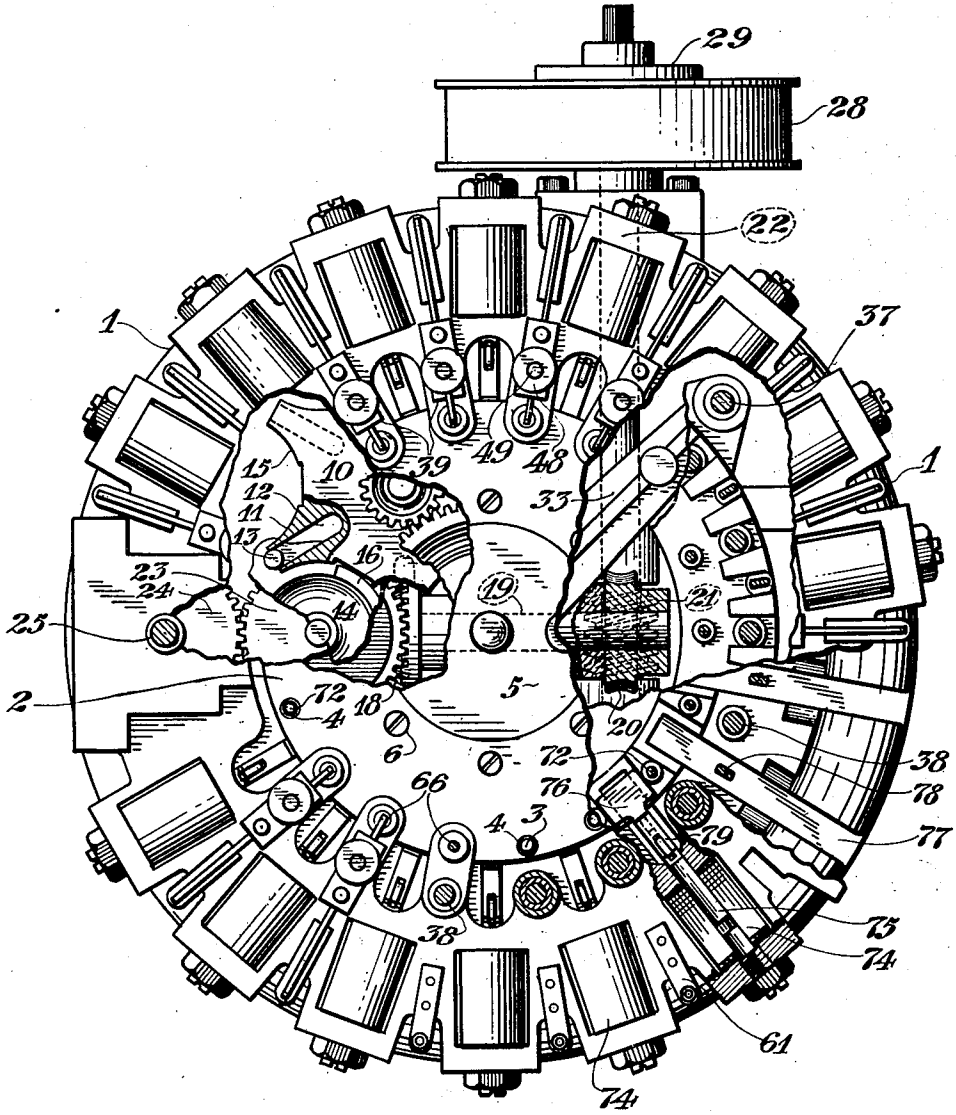

Inventor:

Philip Wallin,

by Carrett Crane,

his Attorneys.

July 10, 1928. 1,676,879

P. WALLIN

GAUGING MACHINE

Filed Sept. 22, 1926 4 Sheets-Sheet 3

Fig. 5

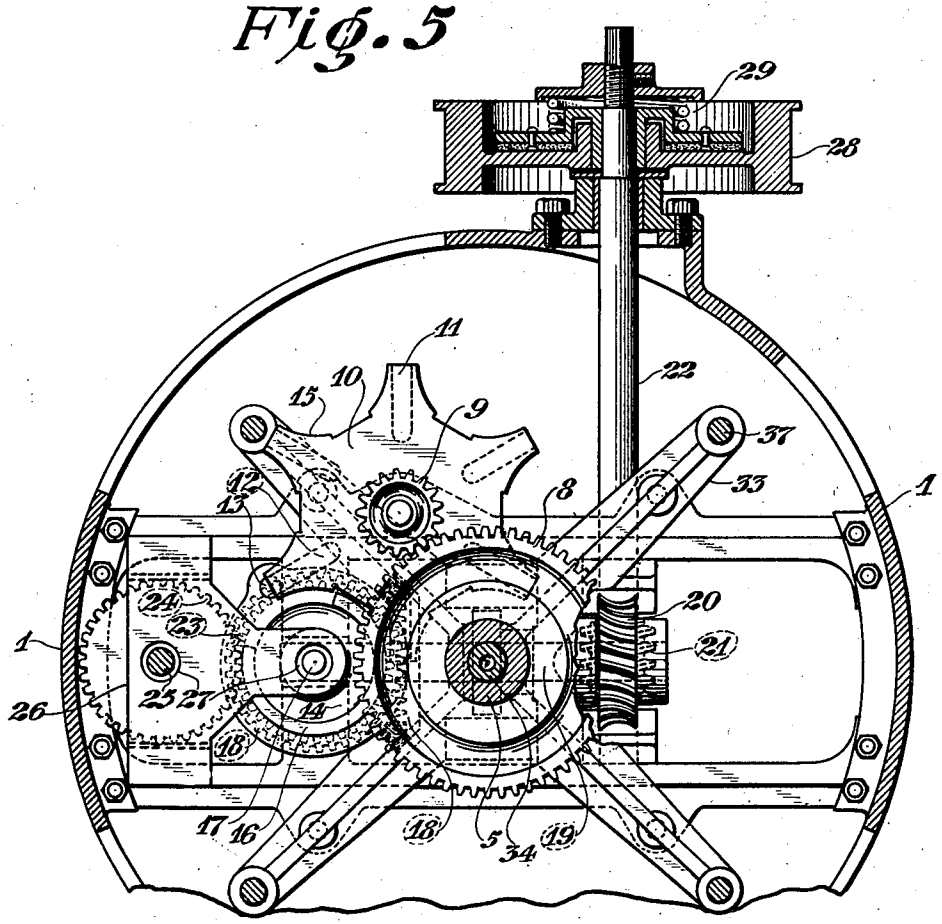

Fig. 6

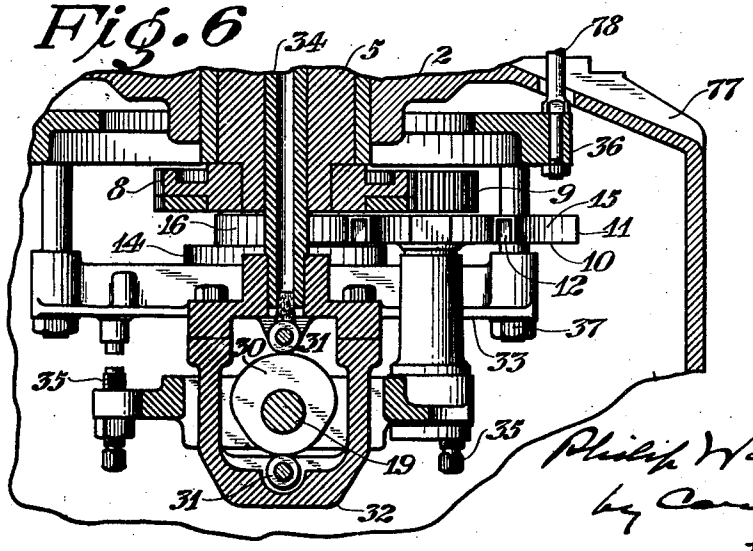

Inventor:
Philip Wallin,
by Cornell & Cornell,
his Attorneys.

July 10, 1928. 1,676,879

P. WALLIN

GAUGING MACHINE

Filed Sept. 22, 1926 4 Sheets-Sheet 4

Fig. 7

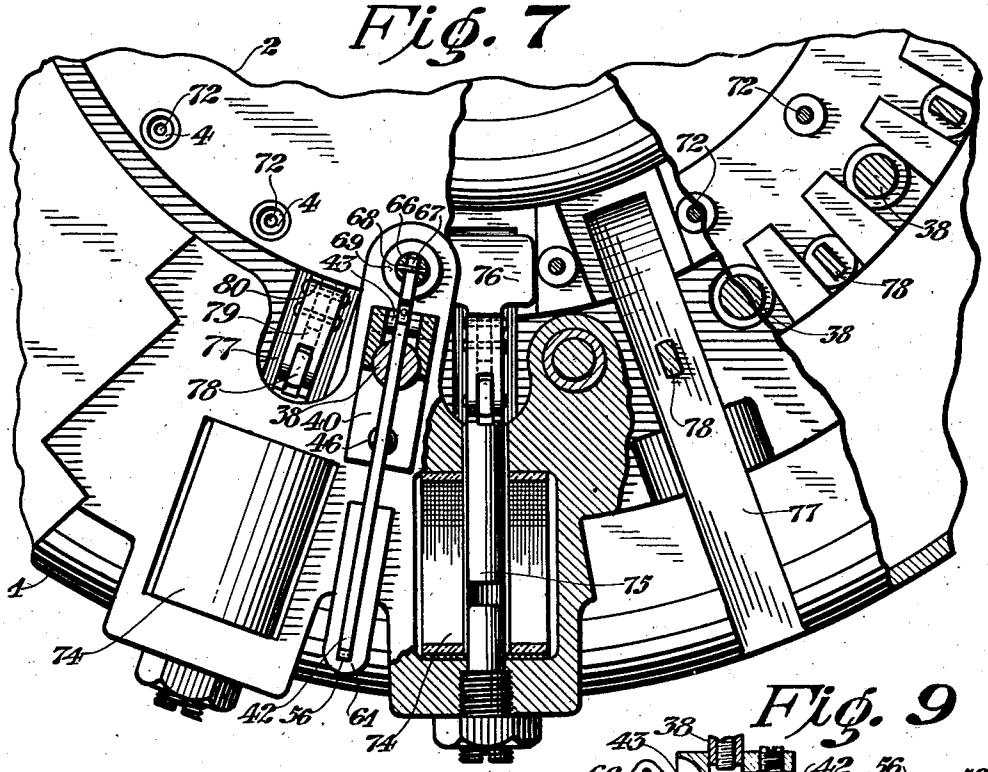

Fig. 9

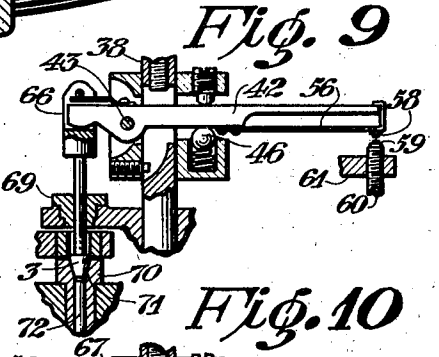

Fig. 8

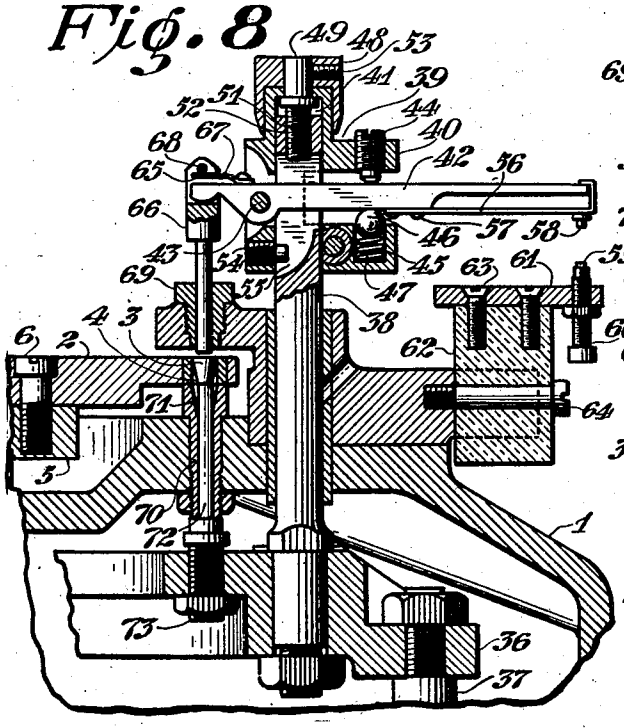

Fig. 10

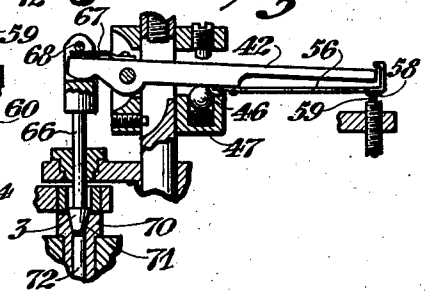

Inventor:
Philip Wallin
by Cameron & Cameron
his Attorneys.

Patented July 10, 1928. 1,676,879

UNITED STATES PATENT OFFICE.

PHILIP WALLIN, OF CANTON, OHIO, ASSIGNOR TO THE TIMKEN ROLLER BEARING COMPANY, OF CANTON, OHIO, A CORPORATION OF OHIO.

GAUGING MACHINE.

Application filed September 22, 1926. Serial No. 136,945.

My invention relates to machines for gauging and assorting taper rollers according to their size, that is, according to their diameters. The invention relates particularly to that type of gauging machine in which the diameter of taper rolls is measured by the distance that the rolls project axially from a tapered socket.

The invention has for its principal object a machine that is automatic in its operation, that is simple in construction and that assorts the rolls economically and accurately.

The invention consists principally in mounting the gauging devices so that they are vertically movable, in rotating the work intermittently so that the rolls are successively brought into alinement with the various gauging devices and then moving said gauging devices toward the work. The invention further consists in loosely mounting the rolls in a rotary indexing member and in transferring the rolls from said indexing member into tapered receiving sockets at the gauging stations. The invention further consists in the means for returning the rolls from such taper receiving sockets to the roll carrier, to be delivered to the next gauging station or to be ejected from the machine. The invention further consists in the gauging and assorting machine and in the parts and combinations of parts hereinafter described and claimed.

In the accompanying drawing, which forms part of this specification, wherein like reference characters indicate like parts wherever they occur,

Fig. 1 is a vertical sectional view of a gauging and assorting machine embodying my invention,

Fig. 2 is a vertical sectional view on an enlarged scale of a shoe and its assorting mechanism whereby a roll that is of the size for which the adjacent gauging device is set is ejected from the machine,

Fig. 3 is a fragmentary sectional view of a portion of the mechanism shown in Fig. 2, Figs. 2 and 3 together showing that the opening on the shoe is opened and closed,

Fig. 4 is a top plan view of the machine,

Fig. 5 is a part horizontal sectional view part elevation thereof,

Fig. 6 is a vertical sectional view showing particularly the means for raising and lowering the gauging devices,

Fig. 7 is a fragmentary top plan view on an enlarged scale, certain parts being broken away, and

Figs. 8, 9 and 10 are vertical sectional views showing different positions of the gauging devices.

The machine is provided with a suitable housing 1 at the center of which is rotatably mounted a ring or disk 2 for receiving and indexing rolls 3 to be measured, said indexing ring being horizontally disposed at the top of the housing 1. Said indexing ring 2 is provided with a multiplicity of holes or pockets 4 (eighteen being shown in the drawings) that receive the rolls 3 and carry them through the machine. The indexing ring 2 may be made separate from its hub portion or member 5 and secured thereto as by screws 6. Said hub portion is journaled in a suitable bearing portion of the housing and packing or bearing material may be interposed between the two.

Secured to the depending hub portion 5 of the indexing ring 2, as by a key 7, is a gear 8 that is driven by a pinion 9 that is operated by means of a Geneva movement. Said movement comprises a rotatably mounted disk 10 having projecting radially disposed portions 11 in which are radial slots 12 adapted to be engaged by a pin 13 on a pinwheel 14, the movement of the pin 13 in one of said slots 12 causing the wheel 10 to rotate. Said pinion 9 is mounted to rotate with said wheel 10. The portions 15 of the star wheel 10 between said radially extending portions 11 are concavely curved and are adapted to be engaged by an arcuate rib 16 on said pinwheel 14; so that when the slotted wheel 10 is not being moved by the pinwheel 14 it is held against movement by reason of engagement of said rib 16 with a concavely curved portion 15 of said star wheel 10.

Said pinwheel 14 is secured to a stub shaft 17 that is suitably journaled in the housing 1 and is driven by means of miter gears 18, one secured to said stub shaft 17 and the other to a drive shaft 19 suitably mounted in the housing. Said drive shaft 19 is suitably connected with some source of power, as by means of a worm wheel 20 and a worm 21 mounted on a worm shaft 22.

Preferably said stub shaft 17 is provided with a gear 23 that meshes with a gear 24 on a shaft 25 that extends vertically through the top of the housing 1. Said shaft may be

caused to operate a suitable feed drive mechanism. A plate 26 may be provided with bearing portions 27 engaging said feed drive shaft 25 and the upper end of said stub shaft 17.

The worm shaft 22 may be driven by means of a pulley 28 and said pulley is preferably provided with a friction clutch 29 device to prevent injury to the gauging mechanism.

Said drive shaft 19 is preferably provided with a cam 30 secured thereto, said cam working against oppositely disposed rollers 31 in a yoke member 32 depending from a spider 33 that is provided with a central guide stem 34 extending through a central bore provided therefor in said hub portion 5 of said indexing ring 2. The downward movement of the spider is limited by adjustable stop screws 35 mounted in the housing.

To the outer ends of the arms of said spider 33 is secured a ring 36 as by pins 37. Said ring carries a plurality of stems 38, on each of which is supported a gauging device indicated generally by 39. Adjustably secured to each stem 38 is a hollow block 40 provided with a cross bore 41 extending therethrough, by which it is mounted on said stem 38. A lever arm 42 extends through each of said blocks 40 and is pivotally mounted in the block as by a pin 43. Each block 40 is provided with a set screw 44 that engages said lever arm 42 and on the other side of the lever arm is provided with a recess 45 in which is mounted a ball 46 that is seated on a spring 47 disposed in said recess, whereby the ball 46 is pressed against said lever 42 and said lever is held between said ball and said screw.

Each block 40 is provided with a cap 48 in which is fixed a pin 49 that has a shouldered portion 50 fitting in said block 40 and has a threaded extension 51 fitting in a screw threaded hole 52 in the top of said stem 38 whereby, by rotating its said cap 48, each block 40 may be raised or lowered on its stem 38 without rotating said block on said stem. A wedge nut 53 or the like is provided for securing the block in position on said stem. Each block 40 is provided with a pin 54 that projects into a slot 55 in the stem thereby holding the block 40 and lever arm 42 in proper angular position relative to the stem 38.

At one end each lever arm 42 is provided with a spring member 56 that is bent over one end of the arm and extends lengthwise of the arm along the underside thereof and is secured thereto as by pins 57. Each spring 56 is provided with a contact point 58 adapted to engage a contact point 59 that is mounted at the end of a screw 60 extending through a plate 61 that is secured to an insulated block 62 as by screws 63, which block 62 is secured, as by a bolt 64, to the body of the machine.

At the end opposite said spring arm (that is at the end of the short arm of the lever) each lever 42 extends into a slot 65 provided therefor in the upper end of a plunger or contact arm 66, the underside of the lever resting in the bottom of said slot 65 and said lever being provided with a spring 67 that rests against a pin 68 in the top of said slot. Each of said contact plungers extends through a suitable guide or bushing 69 provided therefor on the housing.

Mounted in the housing beneath each contact plunger 66 is a hollow socket member 70, the upper end of whose bore is formed into a socket 71 whose taper is the same as that of the rolls 3 being gauged. Extending through the bore of each socket member 70 is a knockout pin 72 whose lower end rests on a set screw 73 mounted in said carrier ring 36 that supports the gauging stems. When the carrier ring is in its uppermost position, as shown in Figs. 1 and 8, the upper ends of the knockout pins 72 are flush with the tops of the socket members 70.

The operation of the machine is as follows:

By any suitable feeding device, the rolls 3 are fed, one at a time and small end down into the pockets 4 of the indexing ring. Rotary movement of the indexing ring brings said ring into position so that the roll receiving pockets 4 thereof are in alinement with the contact plungers 66 of the gauging devices 39, each roll resting on a knockout pin 72. Rotary movement of the indexing ring 2 is prevented by the Geneva movement and the cam 30 lowers the spider 33 and carrier ring 36 and the parts carried thereby. As said parts are lowered, the knockout pins 72 drop down in their socket members 70, permitting the rolls to drop into said tapered sockets 71 in the socket members.

The gauging takes place at the lower end of the stroke of the gauging devices. Said gauging devices are arranged so that they will fit successively smaller rolls: that is the largest roll will be ejected at the first gauging station, the next smaller roll at the next station and so on. Fig. 9 illustrates the position of a gauging device in whose socket member 70 is a roll just smaller than the size for which said device is set. It is noted that the contact plunger 66 engages the top of the roll 3 but does not bear against it sufficiently to cause the plunger to be forced upwardly. In Fig. 10, however, the contact plunger 66 is forced upwardly thus tilting up the short arm of the operating lever 42 and swinging down the long arm against the pressure of the spring pressed ball 46 and the spring on the short arm of the lever.

The contact point 58 on the contact spring 56 is pressed against the adjacent contact point 59, closing an electric circuit (not shown in the drawings), and energizing an electromagnet 74 secured to the housing adjacent to the gauging device 39.

The energizing of said electromagnet 74 attracts the armature 75 thereof and pulls said armature away from its normal position in which the other end 76 is immediately below the path of travel of the roll holding openings of the indexing ring, thus forming a gate that normally prevents rolls from dropping from said indexing ring 2 as it rotates. When an armature 75 is retracted the roll that has just been gauged by the corresponding gauging device 39 is permitted to drop out of the indexing ring 2 into a chute 77 provided in the housing.

In order to reset the several gate carrying armatures 75, pins 78 are secured to the carrier ring 36, one for each armature. Each setting pin 78 is provided at its upper end with a finger or pawl 79 pivotally secured thereto and adapted to engage a shoulder 80 on the upper surface of the armature 75 when said armature is in its retracted or open position and when the carrier ring 36 is at the upward limit of its movement. Thus the downward movement of the carrier ring 36 and the gauging devices 39 prior to the gauging operation will cause any open or retracted armatures 75 to be reset, due to the angular position of the pawls 79 relative to the setting pins 78 and their pivotal connection therewith. The armatures 75 are reset before the end of the downward movement of the carrier ring 36 and the further downward movement causes the outer portion of each pawl 79 to be tilted up, due to the pawl swinging about the shoulder 81 formed at the edge of the surface 82 that normally rests on top of the armature. Thus the outer ends of the pawls 79 will be withdrawn from engagement with the shoulders 80, leaving the armatures 75 free to be retracted into open position if their respective electromagnets 74 are energized. After the gauging operation has been completed at the lower end of the movement of the carrier ring 36, said carrier ring moves upward carrying with it the gauging devices 39. Said carrier ring likewise moves the knockout pins 72 of the socket members 70 upwardly and said knockout pins push the rolls out of the taper sockets 71 into the pockets 4 of the indexing ring, the tops of the pins resting flush with the tops of said socket members.

When the upward movement of the carrier ring 36 and its mechanism has terminated, the indexing ring 2 is rotated one step by its operating mechanism. During this rotation any rolls that have actuated the gauging mechanism 39 of the previous station drop out through the open passageways formed by the retraction of the respective armatures 75. The other rolls in the indexing ring 2 ride over the end or gate portions 76 of the other armatures and are carried to the next gauging position where they rest on the ends of knockout pins 72 as above described. The downward movement of the spider 33, the carrier ring 36 and the gauging devices 39 and the armature setting devices 78 then begins, during this downward movement the open or retracted armatures 75 are reset and at the end of the downward movement the gauging operation is repeated.

The above described gauging machine is simple in construction and operation and is very economical and accurate. It has the advantage of gauging the diameter of rolls according to the amount of projection or "drop" from an accurately tapered socket. Obviously numerous changes might be made without departing from the invention and I do not wish to be limited to the precise construction shown.

What I claim is:

1. A roll gauging machine comprising a plurality of gauging devices, an indexing mechanism for supporting conical rolls standing on their small ends and carrying said rolls into alinement with portions of said gauging devices, separate socket members therefor for receiving and supporting said rolls when in alinement with said gauging devices and means for moving said gauging devices toward said rolls to gauge the same.

2. A roll gauging machine comprising a circular series of gauging devices, a carrier ring supporting all of said gauging devices, means for giving said carrier ring a predetermined vertical movement, a plurality of socket members, each disposed beneath a portion of a gauging device, an indexing ring provided with roll receiving openings, and means for giving said indexing ring a step by step rotation, the roll receiving pockets of said indexing ring being above socket members and below portions of said gauging devices when said indexing ring becomes stationary whereby said rolls drop into said socket members to be engaged.

3. A roll gauging machine comprising a circular series of gauging devices, a carrier ring supporting all of said gauging devices, means for giving said carrier ring a predetermined vertical movement, a plurality of socket members, each disposed beneath a portion of a gauging device and an indexing ring provided with roll receiving openings, means for giving said indexing ring a step by step rotation, the roll receiving pockets of said indexing ring being above socket members and below portions of said gauging devices when said indexing ring becomes stationary and means preventing said rolls

from dropping into said socket members as said indexing ring rotates, permitting the rolls to drop into said socket members at the several gauging stations and raising said rolls from said socket members into the roll receiving opening of said indexing ring after the gauging operation.

4. A roll gauging machine comprising a circular series of gauging devices each including a vertically movable contact plunger, a series of fixed socket members each having a roll receiving socket in alinement with one of said contact plungers, an indexing ring interposed between the tops of said socket members and the lower ends of said contact plungers and provided with a circular series of roll receiving pockets open at the top and bottom, means for intermittently rotating said indexing ring to bring roll receiving pockets into alinement with contact plungers and socket members, a carrier ring supporting all of said gauging devices, means for giving said carrier ring a predetermined vertical movement, a knockout pin in each socket member whose upper end is normally flush with the top surface of said socket member, the lower ends of said knockout pins being supported by said carrier ring whereby said knockout pins drop as said carrier ring is lowered to permit said rolls to drop into the upper ends of said socket members.

5. A roll gauging machine comprising a circular series of gauging devices, a carrier ring supporting all of said gauging devices, means for giving said carrier ring a predetermined vertical movement, an indexing ring provided with roll receiving pockets open at the top and bottom, means for intermittently rotating said indexing roll to bring rolls into alinement with said gauging devices, a socket member beneath each gauging device into which rolls drop to be gauged, means for returning rolls to said indexing ring pockets after being gauged, gates, one for each gauging device, disposed beneath said indexing ring and normally preventing rolls from dropping out of the pockets thereof, and means actuated by the several gauging devices for opening the respective gates.

6. A roll gauging machine comprising a circular series of gauging devices, a carrier ring supporting all of said gauging devices, means for giving said carrier ring a predetermined vertical movement, an indexing ring provided with roll receiving pockets open at the top and bottom, means for intermittently rotating said indexing roll to bring rolls into alinement with said gauging devices, gates, one adjacent to each gauging device, disposed beneath said indexing ring and normally preventing rolls from dropping out of the pockets thereof, means actuated by the several gauging devices for opening the respective gates and means mounted on said carrier ring for closing said gates.

7. A roll gauging machine comprising a circular series of gauging devices, a carrier ring supporting all of said gauging devices, means for giving said carrier ring a predetermined vertical movement, an indexing ring provided with roll receiving pockets open at the top and bottom, means for intermittently rotating said indexing ring to bring rolls into alinement with said gauging devices, and gates, one for each gauging device, disposed beneath said indexing ring and normally preventing rolls from dropping out of the pockets thereof as said indexing ring rotates, each gate being adapted to be retracted by the energization of an electromagnet adapted and arranged to be energized by the action of a gauging device.

8. A roll gauging machine comprising a circular series of gauging devices, a carrier ring supporting all of said gauging devices, means for giving said carrier ring a predetermined vertical movement, an indexing ring provided with roll receiving pockets open at the top and bottom, means for intermittently rotating said indexing ring to bring rolls into alinement with said gauging devices, gates, one for each gauging device, disposed beneath said indexing ring and normally preventing rolls from dropping out of the pockets thereof as said indexing ring rotates, each gate being adapted to be retracted by the energization of an electromagnet adapted and arranged to be energized by the action of a gauging device and means for resetting said gates.

9. A roll gauging machine comprising a circular series of gauging devices, a carrier ring supporting all of said gauging devices, means for giving said carrier ring a predetermined vertical movement, an indexing ring provided with roll receiving pockets open at the top and bottom, means for intermittently rotating said indexing roll to bring rolls into alinement with said gauging devices, gates, one for each gauging device, disposed beneath said indexing ring and normally preventing rolls from dropping out of the pockets thereof each gate being adapted to be retracted by the energization of an electromagnet adapted and arranged to be energized by the action of a gauging device and means actuated by the movement of said carrier ring for resetting said gates.

10. A roll gauging machine comprising a plurality of gauging devices, a carrier therefor, means for giving said carrier a vertical movement, a plurality of gates, one for each gauging device, means actuated by said gauging devices for retracting the respective gates, and means mounted on said carrier for resetting said gates, said means for each gate comprising a pin mounted on

said carrier and a finger pivotally secured to said pin and having its lower end resting on the top of said gate.

11. A roll gauging machine comprising a plurality of gauging devices, a carrier therefor, means for giving said carrier a vertical movement, a plurality of gates, one for each gauging device, means actuated by said gauging devices for retracting the respective gates, and means mounted on said carrier for resetting said gates, said means for each gate comprising a pin mounted on said carrier and an inclined finger pivotally secured at its upper end to said pin and having its lower end resting on top of said gate, the end of said finger resting against a shoulder provided therefor on said gate when said gate is retracted and said carrier is in its uppermost position, whereby all retracted gates are restored to normal position on the down stroke of said carrier.

12. In a machine of the kind described, a gauging device comprising a supporting stem having a slot therein, a hollow block having a cross bore by means of which it is mounted on said stem, means for adjusting the position of said block on said stem, a pivotally mounted lever arm extending through said hollow block, a contact plunger pivotally and resiliently secured to the end of the short arm of said lever, a spring contact member secured to the end of the long arm of said lever, a contact point on said spring, a fixed contact point adapted to be engaged by said spring contact point, a set screw engaging one edge of said lever arm to prevent swinging movement thereof in one direction and a spring pressed ball engaging the other edge of said lever arm to permit limited swinging movement thereof in the other direction.

13. In a machine of the kind described, a gauging device comprising a supporting stem having a slot therein, a hollow block having a cross bore by means of which it is mounted on said stem, means for adjusting the position of said block on said stem, a pivotally mounted lever arm extending through said hollow block, a contact plunger pivotally and resiliently secured to the end of the short arm of said lever, a bushing for guiding said contact plunger, a spring contact member secured to the end of the long arm of said lever, a contact point on said spring, a fixed contact point adapted to be engaged by said spring contact point, a set screw engaging one edge of said lever arm to prevent swinging movement thereof in one direction and a spring pressed ball engaging the other edge of said lever arm to permit limited swinging movement thereof in the other direction.

Signed at Canton, Ohio, this 17th day of September, 1926.

PHILIP WALLIN.