March 25, 1930. H. J. STEWART 1,751,895

COLLATING TABLE

Filed Sept. 13, 1927

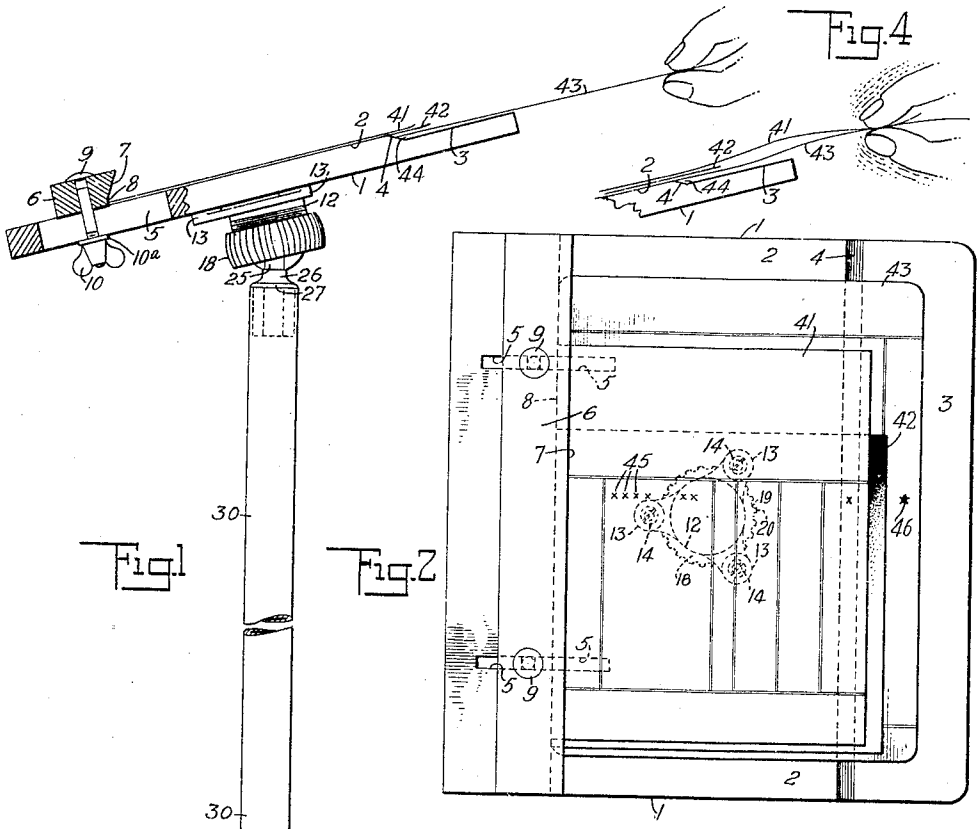

Fig. 1

Fig. 2

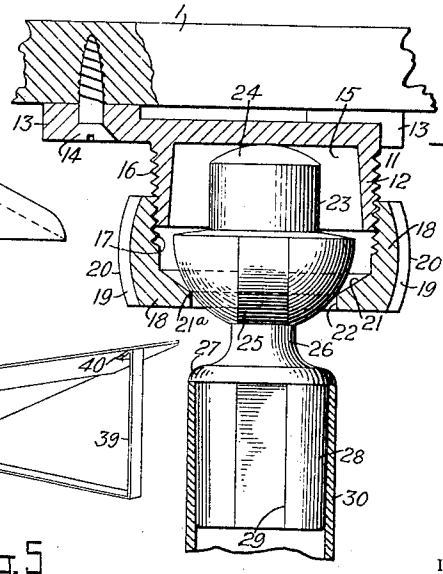

Fig. 3

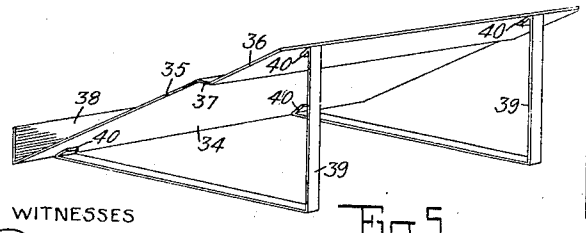

Fig. 5

Fig. 4

WITNESSES

E. M. Wells.

M. W. Pool

INVENTOR

Harvey J. Stewart

BY Jacob Felbel

ATTORNEY

Patented Mar. 25, 1930 1,751,895

UNITED STATES PATENT OFFICE

HARVEY J. STEWART, OF SAN FRANCISCO, CALIFORNIA, ASSIGNOR TO REMINGTON TYPEWRITER COMPANY, OF ILION, NEW YORK, A CORPORATION OF NEW YORK

COLLATING TABLE

Application filed September 13, 1927. Serial No. 219,313.

My invention relates to collating devices, and has for its object the provision of a new and improved collating plate or table whereby a plurality of work sheets may be expeditiously collated together with an interleaved sheet or sheets of carbon or other transfer material, and without the necessity of the operator, collator or typist directly handling or touching the carbon paper.

To the above and other ends which will hereinafter appear, my invention consists in the features of construction, combinations of devices and arrangements of parts hereinafter described and particularly pointed out in the claims.

As is well understood, it has heretofore been usual in billing or statement work in business houses to write simultaneously or make duplicate entries by means of a typewriting or other writing machine on a plurality of work sheets. For example, it is common practice to typewrite entries on a statement or bill sheet and to make duplicate entries by means of an interleaved carbon sheet or other transfer material on an underlying record or ledger sheet. These two sheets have to be brought into proper co-relationship prior to writing, and this co-relationship, of course, is variable, depending on the number of previous entries on one or both sheets. It has always been a problem as to how the sheets may be best and most expeditiously collated, and this problem has been complicated by the necessity of employing a transfer medium between the work sheets in order that the entries may be duplicated at a single writing. When carbon sheets are employed as transfer or duplicating means, it has heretofore been common to provide a carbon sheet for each two work sheets; or, in the alternative, to use the same carbon sheet for a plurality of writing or duplicating operations on successive sets of sheets, in which event it has been necessary for the operator to remove the carbon from between the written sheets and then enter or interleave it with the next two sheets to be written upon. This handling of the carbon, of course, is an unpleasant task, as it soils the operator's fingers and generally slows up the work, besides resulting in soiling or smudging the work sheets handled by the operator.

My present invention, while retaining the advantages of the use of a single unattached carbon sheet over and over again until its transfer surface is exhausted, avoids any necessity of direct handling of the carbon by the operator, besides providing facilities for promoting and speeding up the collating of the sheets with which the carbon paper is interleaved.

To these ends I provide a collating plate or board which is preferably mounted on a support in an inclined position, the working face of the plate being supplied with means which co-operate with one sheet to provide a pocket-like or V-shaped guide for another sheet, whereby the latter may be readily caught and guided or slipped under the first sheet. Preferably the working face of the plate comprises two surfaces or steps at different levels or in different parallel planes, these surfaces or steps being connected by an incline or beveled surface; but it is not absolutely essential that a complete or continuous second surface be employed in order to provide the guide or means for enabling one sheet to be readily registered with the other sheet and the associate carbon.

The invention will be described and explained in detail in connection with the accompanying drawings, wherein

Figure 1 is a side elevation of the collating table, parts being shown in section and other parts being broken away.

Figure 2 is a top plan view of the collating table.

Figure 3 is a fragmentary detail view, partly in section.

Figure 4 is a fragmentary operating view.

Figure 5 is a perspective view of a modified form of collating table.

The collating table in its preferred form (Figs. 1–4) comprises a plate or board, a support therefor, and a connection between them whereby the plate is supported in inclined position, the angle of the inclination being variable at will. The collating plate proper, designated by the numeral 1, may be of any suitable material, that shown herein being of

wood such as oak having smooth and finished surfaces. The working face of the table is provided with two surfaces or steps 2 and 3 connected by an incline or bevel 4. Toward the rear or lower end the plate 1 is formed with two parallel slots indicated at 5. Mounted on the plate and extending transversely of the slots is a stop in the form of a bar 6, also preferably of wood such as oak, and having its forward face inclined or beveled as indicated at 7, the incline terminating in a stop face proper 8 which is at right angles to the step or surface 2. The stop bar 6 is perforated to receive a pair of headed bolts 9 which extend downward through the slots 5 and have their lower ends threaded to receive thumb or wing nuts 10 whereby the bar 6 may be clamped or secured to the plate 1. Preferably washers 10[a] are interposed between the nuts 10 and the under face of the plate 1, these washers fitting loosely over the bolts 9 and bridging the slots 5. By loosening the nuts 10 the bar 6 may be adjusted towards or away from the incline 4, the construction thus providing for relative adjustability between the stop and the device or means whereby the collating and guiding of a sheet into co-operation with the stop device or bar 6 is facilitated, said guiding device in the present instance being the incline 4. To facilitate adjustments the upper parts of the bolts 9 may be squared to prevent turning in the perforations in the bar 6 which may be correspondingly squared at their upper ends.

The collating plate or board is preferably connected to its support by a universal or ball-and-socket joint comprising a two-part socket or bearing, and to this end there is secured to the under side of the plate 1 one metal socket piece or seat indicated as a whole by the numeral 11 and comprising a downwardly extending body portion 12 and outwardly extending or radiating ears 13. These ears are perforated to receive wood screws 14 whereby the socket piece 11 is secured to the under side of the plate 1. The body portion 12 is cupped out or depressed to provide a circular bearing opening 15 open at the lower side. The outer surface of the part 12 is formed with screw threads, as indicated at 16, which co-operate with threads 17 formed interiorly in the other socket piece which is a ring-like member 18, the outer face of which is formed with parallel scores 19 providing projections 20 whereby hand adjustment of the parts 11 and 18, one on the other, is facilitated. These two parts or elements constitute a two-part bearing or socket for the head or ball-end of the standard presently to be described. Below the interior threaded portion 17 the part 18 is provided with an inclined bevel 21, terminating in a circular opening 22, thus providing the lower portion of the socket or seat for the ball-head, which is designated as a whole by the numeral 23. The upper portion or half of this ball-head may be cut away or reduced for the sake of lightness, leaving only the circular top portion 24 to co-operate with the horizontal face or bottom of the seat 15, as shown in Fig. 3. The lower portion of the head 23 is generally spherical and co-operatively engages with the corner or edge 21[a] formed by the junction of the faces 21 and 22. However, for convenience of construction the ball-head may be slightly flattened at diametrically opposite faces, as indicated at 25, for convenience in casting, these flats preventing the formation of an excessive "fin," so-called, at the mold joints which would have to be reduced by a special operation. The construction is such that the ball-head 23 may be properly finished by sand tumbling. The ball-head is provided with an integral downwardly extending neck 26 terminating in a circular flange 27 and below which is a cylindrical extension 28 provided with flats 29 corresponding to the flats 25 and for the same purpose. The projection 28 is driven or forced into the upper end of a tubular standard 30 having a diameter substantially equal to that of the flange 27, the flange resting on the top of the tube 30 and being rounded off to provide a finished appearance. The lower end of the tube 30 fits into a perforation in a base 31 and is secured thereto by one or more screws 32. A stop pin 33 projecting outwardly from the standard or tube 30 limits the extent of its entrance into the base.

It will be understood that the ball or head 23 seats in the two-part socket 11, 18, and normally is clamped by screwing up the part 18 on the part 11, by which means the top 24 of the ball-head is forced against the closed upper end of seat 15, while the corner 21[a] presses upward against the lower rounded face of the ball-head, which thus is frictionally held by the two-part joint 11, 18. The joint may be loosened by turning down the part 18 sufficiently to free the head 23, so that the collating plate 1 may be tilted or inclined into any desired position, after which the joint may be tightened to hold or clamp the plate in the position to which it has been adjusted. No claim is made herein to the specific form of the connection or joint above described between the collating plate and its support, for the reason that this per se is the invention of another.

The collating table above described is adapted to be placed on the floor by the side of the operator's desk or stand. In Fig. 5 there is shown another form of the invention which is adapted to be set on the stand or desk itself. In the Fig. 5 construction the collating plate proper 34 is in the form of a single piece of sheet metal bent or shaped to provide two parallel work faces or steps 35 and 36 and a connecting device, bevel or in-

cline 37. The lower end portion of the plate 34 is bent upward to provide a stop face 38 for the collated sheets. The plate 34 is supported in an inclined position by a support comprising two arms 39, each formed of a strip of sheet metal bent to form two branches at right angles to each other, the longer branches being the horizontal ones and the shorter branches the upright ones. Both branches terminate in tabs or ears 40 to which the plate 34 is suitably secured as by riveting. The support comprising the arms or members 39 maintains the collating plate 34 in an inclined position and adapts the whole collating table to rest on the top of the operator's stand or desk.

The same principles are involved in both constructions of collating table and both are adapted to carry out my invention in a practicable way. In illustrating one method of use in connection with the Figs. 1–4 construction there is shown a work sheet in the form of a ruled statement or bill numbered 41, a sheet 42 of transfer material or carbon paper a trifle wider than the statement but somewhat shorter, and another work sheet 43 illustrated as a ruled ledger form or record sheet. In making use of the collating device, the carbon sheet 42 is applied, face downward, to the table face or stop 2. The stop bar 6 has been previously so adjusted with relation to the incline 4 that the right-hand edge portion of the carbon projects beyond the incline to some extent, providing an overlap, when the carbon sheet is aligned or adjusted with its left-hand edge in contact with the stop face 8, as will be clear from Fig. 1. With the carbon sheet in place on the table, a statement sheet 41 and its companion ledger sheet 43 are removed from the holder or other source of supply and the statement sheet 41 then is placed or dropped face up on top of the carbon sheet 42. No particular relationship between the carbon sheet and the statement is necessary other than that the carbon must underlie all of that portion of the statement which is to be written or printed on. From Fig. 1 it will be seen that the right-hand edge portion of the statement also projects beyond the incline 4. With the two sheets 41 and 42 in position on the plate 1 it will be observed that their overlaps or outwardly projecting portions co-operate with the incline 4 and to some extent with the lower face 3 to provide a pocket-like opening or V-shaped guiding opening, which for descriptive purposes is designated by the numeral 44. This pocket facilitates the application of the second work sheet or ledger to the table surface 2, and Fig. 1 graphically illustrates one method by which this may be accomplished. The operator simply thrusts the sheet 43 sidewise over the face 3 and into the pocket 44 where the left-hand edge of the sheet will contact with or be caught by the incline 4 so as to be guided or cammed, so to speak, upward under the two sheets 41 and 42, thence being slid leftward over the face 2 of the table and beneath the other two sheets until the left-hand edge is arrested by the stop face 8. It is then merely necessary, in order properly to collate the two sheets 41 and 43 to move them relatively up and down until the last entries written on them shall be in alignment. In Fig. 2 the line of writing on sheet 41 is presented by a series of x's numbered 45, while the last line of writing on the ledger 43 is indicated by the clearance sign or star 46, which is close to the right-hand margin and exposed to view beyond the edge portions of the carbon and the sheet 41. The operator now lifts the three collated sheets 41, 42 and 43 from the collating table, and, maintaining the sheets in collated relationship by holding them in the fingers with sufficient tightness, enters them in the machine on which the writing is to be done. In the operation of writing, the entries on the outer or statement sheet 41, which usually will be made through an inked ribbon, will be duplicated through the interleaved carbon 42 on the underlying record sheet.

After the writing has been finished the sheets are removed from the machine and dropped on to the collating table, the carbon being, so to speak, shaken out or riffled from the sheets 41 and 43, as I have attempted to illustrate graphically in Fig. 4, the dotted lines therein being intended to represent the shaking motion of the operator's hand in order to dislodge the carbon from between the other two sheets and drop it on the table. This will leave the carbon sheet in the same position on the working face 2 of the plate 1 at which the operation of collating was started, so that the collating operation may be repeated with the next two sheets, that is, a statement and an associated ledger sheet, together with the carbon, in the manner above outlined. The fortuitous relationship of the carbon with the other sheets prevents it from being used up in defined lines only, and hence tends to complete exhaustion of the whole carbon surface.

It will be observed that in both the collating operation proper and in the subsequent displacement of the carbon sheet after the writing has been done, the carbon paper itself is not directly handled. The statement sheet is dropped on to the carbon without the operator touching it and the ledger sheet is caught and guided under the carbon also without the operator touching it. These two sheets are likewise collated or moved up and down into desired relationship without any handling of the carbon, and when the collated sheets are removed from the collating table the carbon is held between them but is not touched. This is true also of the riffling out or dislodging op-

eration whereby the carbon is replaced on the table, being slid out from between the other sheets and on to the table in position to repeat the operation. Not only is the carbon not touched by the hands or handled during the outlined operations of employing my invention but also the collating of the sheets is greatly facilitated. In fact, although, for the sake of clearness of illustration and description, the ledger sheet is shown in Fig. 1 as being guided into place separately from the statement sheet which is already in place, in practice it is common for the operator to handle the two sheets 41 and 43 together with one hand, simply dropping the statement on top of the carbon and sliding the ledger sheet under it by what amounts in effect to a continuous motion, the two sheets being held loosely by the hand near their outer edges during this adjustment on the table as well as during the collating of the sheets. It will be apparent that the inclination of the table assists the operations, since the force of gravity tends to slide all the sheets down into co-operation with the aligning bar or stop 6. Likewise the inclination of the stop face 7 tends to guide the sheets as they slide or are moved leftward in Fig. 1 into contact with the stop face 8.

It will be further apparent that it is only necessary to effect a relative adjustment of the stop 6 with relation to the incline 4 sufficient to allow for a comparatively slight extension rightward (as viewed in Fig. 1) of the statement sheet and the carbon beyond said incline. Also, while the lower step or working face 3 of the collating plate is highly desirable, it is not an absolute essential, as it may be dispensed with while the inner or left-hand end portion of the guide opening formed between the incline 4 and the projecting sheet or sheets 41 and 42 is still retained. Likewise while it has been found preferable to bevel or incline the edge of the surface 2 of the plate, as indicated at 4, a guide with a comparatively wide entrance or mouth for receiving the lower sheet 43 and which narrows down substantially to a point where it coacts with the overlying sheet 41, may be provided by other means if found desirable.

Various changes may be made without departing from my invention; and of course it may be used in many ways other than the one outlined herein.

What I claim as new and desire to secure by Letters Patent, is:—

1. A collating plate provided with two work sheets supporting surfaces disposed in separate parallel planes and means for directing a work sheet from one to the other of said surfaces.

2. A collating plate provided with two work sheet supporting surfaces at different levels and an inclined guiding face connecting the said two surfaces to guide a sheet from one of said surfaces to the other.

3. A collating plate whose work sheet supporting face comprises two parts, one in advance of and at a different elevation from the other, and intermediate guiding means co-operating with the edge of a work sheet to guide and afford smooth and uninterrupted movement of a work sheet from one of said parts to the other.

4. A collating plate whose working face comprises steps and an inclined face connecting the steps, one step and the inclined face co-operating with a sheet applied to the other step to provide a guide pocket for facilitating both the application of a second sheet on the first mentioned step beneath the first sheet and also the relative adjustment of the two sheets.

5. In a device of the character described, the combination of a work sheet collating surface, means with which a sheet may be associated to catch and guide a second sheet beneath the first mentioned sheet, and a stop for the sheets to support them in correlation.

6. In a device of the character described, the combination of a work sheet collating surface, means cooperating with one work sheet to provide a guide pocket for facilitating the adjustment on said surface of a second work sheet beneath said first mentioned work sheet, a stop for the work sheets, and means for affording relative adjustment to different set positions between said means and said stop.

7. In a device of the character described, the combination of a work sheet collating surface, and means cooperating with a work sheet and an underlying carbon sheet to provide a V-shaped pocket for facilitating the guiding on to said surface of a second work sheet under both the first work sheet and the carbon paper.

8. A collating table comprising a collating plate having two parallel working surfaces and a connecting bevel or incline, a stop mounted on one of said surfaces, and means for supporting said plate in an inclined position so that a work sheet when applied to said plate will be impelled towards said stop by the force of gravity.

9. In a device of the character described, the combination of a collating work sheet supporting surface, means cooperating with a work sheet and an underlying carbon sheet supported on said surface to provide a V-shaped pocket for first catching the advancing edge and then facilitating the guiding on to said surface of a second work sheet under both the first work sheet and the carbon paper, and a stop for all of the sheets to rest against.

10. The combination of a collating plate provided with two work sheet supporting surfaces at different levels and having means for directing a work sheet from one of said surfaces to the other as well as a stop having a beveled stopping face for the sheets col-

lated on said plate, and means for supporting said plate in an inclined position.

11. The combination of a collating plate provided with two work sheet suporting surfaces disposed in different planes and having means for directing a work sheet from one of said surfaces to a collating position on the other surface and also having a stop at the lower end of the plate for preventing the work sheet or sheets coacting therewith from sliding off the collating plate, and means for supporting said plate so that each of said surfaces is maintained in a plane at an angle to the horizontal.

12. In a device of the character described, the combination of a collating surface adapted to support a carbon sheet and a superposed work sheet, and means associated with said collating surface and with said sheets supported thereon to catch and guide a third sheet to a position where it will underlie the first mentioned sheets.

13. In a device of the character described, the combination of a collating surface, and means associated with said collating surface and cooperating with a sheet supported thereon to provide a guide pocket for facilitating the introduction of a second sheet beneath the first mentioned sheet and for adjusting it relatively thereto on said collating surface.

14. A collating table provided with two connected rigid work sheet supporting faces angularly disposed with relation to each other so that a sheet applied to one face will co-operate with the other face to provide a V-shaped guide or pocket for another sheet introduced beneath said first mentioned sheet.

15. A collating plate whose work sheet supporting face comprises two steps connected by a bevel that directs a work sheet from one of the steps to and beneath a work sheet supported by the other step.

16. The combination of a collating plate provided with two work sheet supporting surfaces at different levels and having means for directing a work sheet from one of said surfaces to and beneath a work sheet supported on the other of said surfaces, and means for supporting said plate in an inclined position.

17. The combination of a collating plate provided with two work sheet supporting surfaces disposed in separate parallel planes and having means for directing a work sheet from one of said surfaces to and beneath a work sheet supported on the other of said surfaces, and means for supporting said plate so that each of said surfaces is maintained in a plane at an angle to the horizontal.

18. A collating plate comprising two work sheet supporting surfaces at different levels and an incline connecting the said two surfaces to facilitate the feeding of a work sheet from one of said surfaces to and beneath a work sheet on the other of said surfaces in combination with a work-sheet stop, and means for affording relative adjustment to different set positions between said stop and said incline.

19. A collating plate for supporting and collating work sheets thereon and having means that cooperate with a sheet applied to and supported by said plate so as to catch and guide another sheet onto the plate beneath the first sheet supported as stated.

Signed at the city and county of San Francisco, and State of California, this 30th day of August, A. D. 1927.

HARVEY J. STEWART.