H. W. COLLENDER.

FASTENING-DEVICES FOR BILLIARD CUSHION-RAILS.

No. 193,751. Patented July 31, 1877.

Fig. 1.

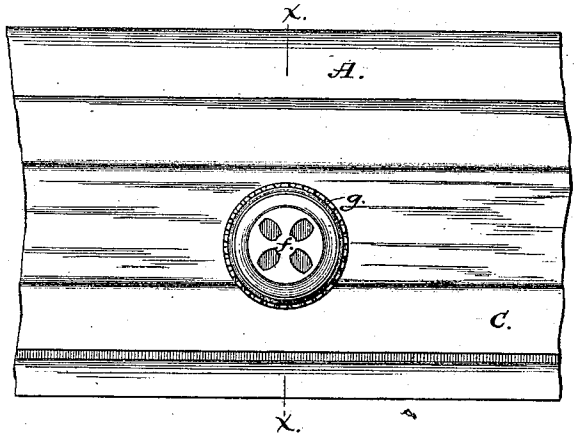

Fig. 2.

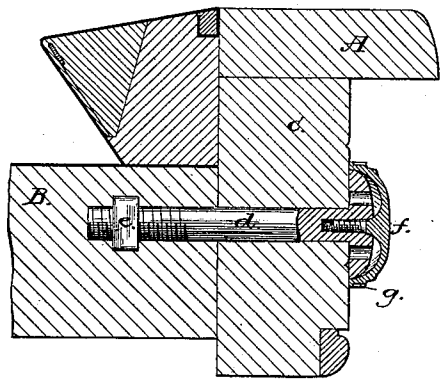

Witnesses;

Geo. H. Graham.

Jacob Felbel

Inventor;

Hugh W. Collender

by D. N. McSherry

Attorney.

N. PETERS, PHOTO-LITHOGRAPHER, WASHINGTON, D. C.

UNITED STATES PATENT OFFICE.

HUGH W. COLLENDER, OF NEW YORK, N. Y.

IMPROVEMENT IN FASTENING DEVICES FOR BILLIARD-CUSHION RAILS.

Specification forming part of Letters Patent No. **193,751**, dated July 31, 1877; application filed May 18, 1877.

To all whom it may concern:

Be it known that I, HUGH W. COLLENDER, of New York city, in the county of New York and State of New York, have invented an Improved Bolt for Billiard-Table Cushion-Rails; and I do hereby declare that the following is a full and exact description thereof, reference being had to the accompanying drawings, making part of this specification.

Previous to my invention it has been customary to use for the attachment of the cushion-rails to the bed of a billiard-table, bolts which were provided with large finished heads, and which were so applied that while the body of the bolt passed through the cushion-rail and its threaded end engaged with a blind nut let into the bed, the head of the bolt took its bearing on the outer face of the cushion-rail, and was formed with means for turning it in and out with a suitable tool, and, therefore, had the holes (or other devices to permit the use of a tool to screw in and out the bolt) exposed to view.

It has, however, been suggested so to make and apply the cushion-rail bolts that, by reason of their heads being counter-sunk or let into the rail, and by the use of an ornamental cap or washer placed over the counter-sunk head, and secured to the latter by a small screw, the large bolt-head with its holes for the insertion of the bit or screw-driver would be hidden from view.

It has also been suggested in the manufacture of picture-nails and other analogous articles to have removable ornamental heads combined in certain ways with the permanent head of the screw-bolt or nail; but in the last-mentioned contrivance the things devised have been such in structure and operation as to be inapplicable to the purposes of my invention, and in the first-mentioned arrangement not only must the nick of the small cap-screwing screw be exposed to view, and considerable more labor be performed in the application of the bolt with its cap and cap-holding screw, but besides these objections the cushion-rail is weakened materially by the letting in of the bolt-head just at the locality where it is most important to have the rail the strongest.

I propose, by my invention, to overcome these objections, and afford means by which, without weakening the cushion-rail, without the use of any separate screw and washer, without any possible capacity to mar or mark the face of the cushion-rail by repeated adjustments, and by means comparatively economic of manufacture, the heads of the cushion-rail bolts will be entirely hidden from view by ornaments which are attachable to, and cover over, the bolt-heads without the use of any screw-driver or other tool, or any depressions or projections such as are necessary when any sort of implement has to be used to apply a screw-cover or ornamental cap; and to this end and object my invention consists in the use, in combination with the usual cushion-rail and a bolt adapted to have its head come to a bearing on the outer surface of the rail, but having a small hole drilled and tapped axially in said head, of an ornamental cap or cover adapted to fit over the bolt-head and against the outer face of the cushion-rail, and formed or provided with a screw-teat projecting from the center of its back side, that will enter the female screw formed in the bolt-head and effect the securement in place of said ornamental cap or cover, and also formed with a knurled bead to render it capable of adjustment conveniently with the fingers, all as will be hereinafter more fully explained.

To enable those skilled in the art to make and use my invention, I will proceed to more fully describe the same, referring by letters to the accompanying drawings, in which—

Figure 1 is a face view or elevation of the cushion-rail or upper part of a billiard-table, and Fig. 2 a vertical section of the same at the line *x x* of Fig. 1.

In the several figures the same part will be found designated by the same letter of reference.

A is the cushion-rail, B the bed, and C the frame of an ordinary billiard-table. *d* is one of the cushion-rail bolts, which has its threaded end engaged, as usual, with a nut, *e*, let into the bed or frame, as clearly shown at Fig. 2. The bolt *d* is made and applied in the usual manner, except that it has drilled into the center of its head, and suitably tapped, a hole that forms a nut for the screw-teat of the ornamental head cover or cap *f*, which is arranged over and screwed to the head of bolt

d after the latter has been screwed into place, and so as to completely cover and hide said bolt-head, as shown. This covering-cap *f* may be made of any suitable material and design, though I have by preference made it of cast metal. It may be struck up out of sheet metal, and may be varied at pleasure in the character of its ornamentation.

Near the outer edge or rim of the cap *f* I propose to have formed a roughened bead or serrated collar, so as to present a knurled surface, as shown at *g*, for the purpose of permitting a more ready manipulation of the cap with the thumb and fingers in screwing it onto the head of bolt *d* or removing it therefrom, but the bearing-edge of the cap on the surface of the rail must be perfectly circular.

It will be observed that the head of bolt *d* simply bears against the rail A on the outer face of the latter in the more usual and most desirable manner, while at the same time this head, which must have in it the holes or cut for the accommodation of the screw-driver or other tool for screwing in and unscrewing said bolt, is completely hidden and covered by the cap *f;* and it will be seen that by having the cap *f* made with a knurled or serrated head, *g*, it can be most readily turned round to attach it to, or remove it from, the head of bolt *d*, while by having the bearing edge or base circular the cap must always bear at the same line, and cannot produce any unsightly mark or marring of the rail-surface. Of course the cap *f* might be made polygonal near its base or perimeter, in lieu of knurled, to facilitate the turning of it; but this form would not answer so well, since the base edge must be circular to avoid any possible liability of the base making a mark on the finished surface of the rail A, either in turning the cap *f* to attach it to the bolt-head or leave a mark that would show after having been removed and replaced.

While the ornamental caps may be made at small cost, the usual cost of finishing up the heads of the bolts is saved, and, therefore, taken all in all an actual saving in expense is made by the use of my invention, while at the same time considerable advantage is gained by it in the appearance of the table.

Having so fully described my improvement that those skilled in the art can make and use it, and not wishing my invention to be confounded with that kind of device for covering screw-heads which has not a knurled bead to permit the ready turning of the cap, and which is so made with points or an irregularly-shaped base that it will mark and mar the surface of the article in which the screw may be inserted, and cannot be practically applied to the purposes of a cap to the adjusting and securing (both) of a cushion-rail, an instance of which kind of device is shown in the patent to John Gardner for a picture-nail cap October 29, 1867, what I claim, and desire to secure by Letters Patent, is—

In combination with the cushion-rail of a billiard-table, a cushion-rail bolt and ornamental cap, the bolt having the ordinary head coming to a bearing on the outer face of the rail, and the ornamental cap being formed with a knurled bead near its perimeter, and with a perfectly circular base or bearing surface, all substantially as specified, for the purposes set forth.

In testimony whereof I have hereunto set my hand and seal this 14th day of May, 1877.

HUGH W. COLLENDER. [L. S.]

In presence of—
JOHN D. O'CONNOR,
R. W. COLLENDER.