March 27, 1956 Z. M. SHAPIRO ET AL 2,739,566

APPARATUS FOR THE PRODUCTION OF COATINGS OF PURIFIED METALS

Filed June 24, 1953 2 Sheets-Sheet 1

FIG. 1.

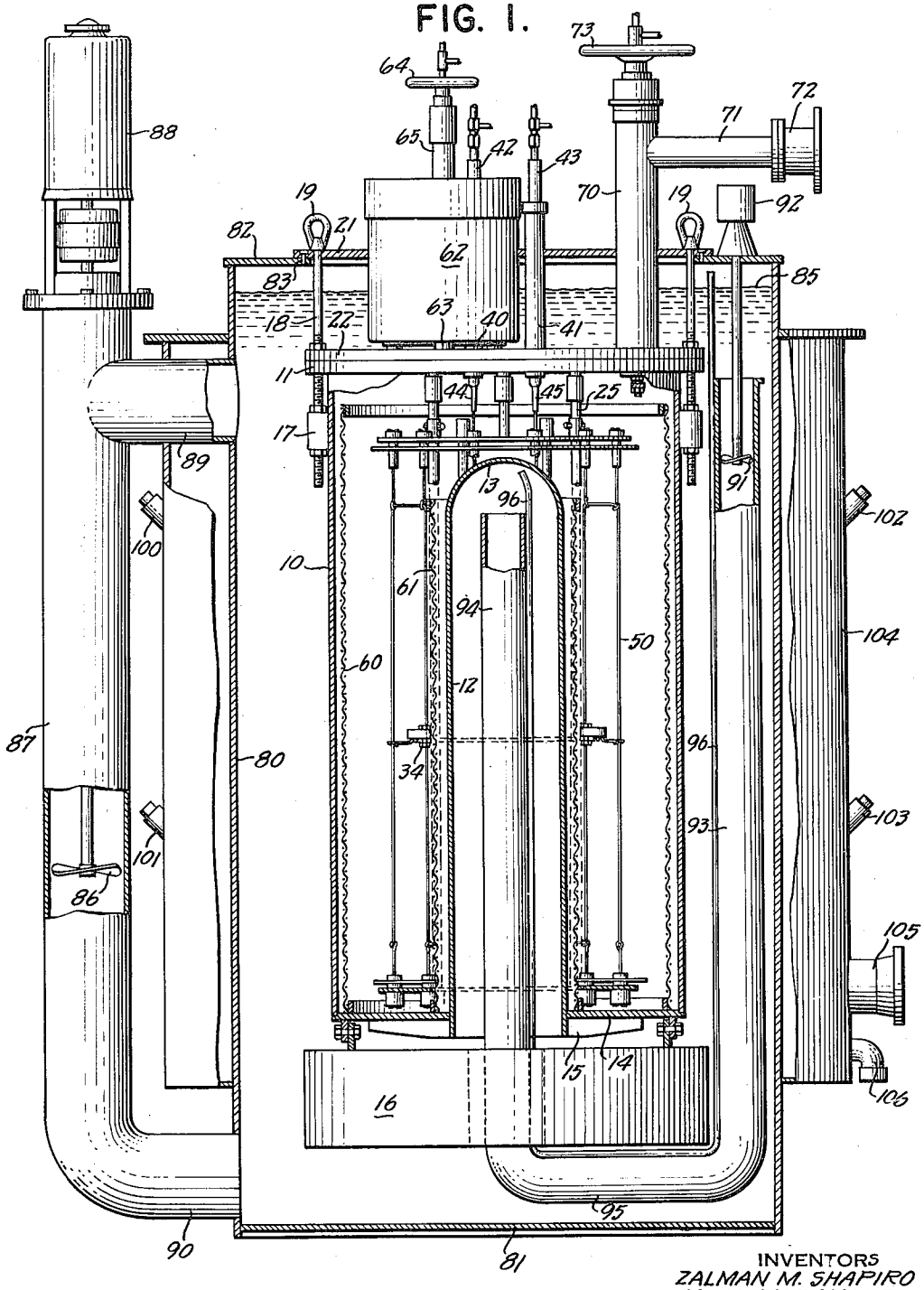

INVENTORS
ZALMAN M. SHAPIRO
JACK McDONALD
BY
Roland A. Anderson
ATTORNEY

March 27, 1956 Z. M. SHAPIRO ET AL 2,739,566

APPARATUS FOR THE PRODUCTION OF COATINGS OF PURIFIED METALS

Filed June 24, 1953 2 Sheets-Sheet 2

FIG. 2.

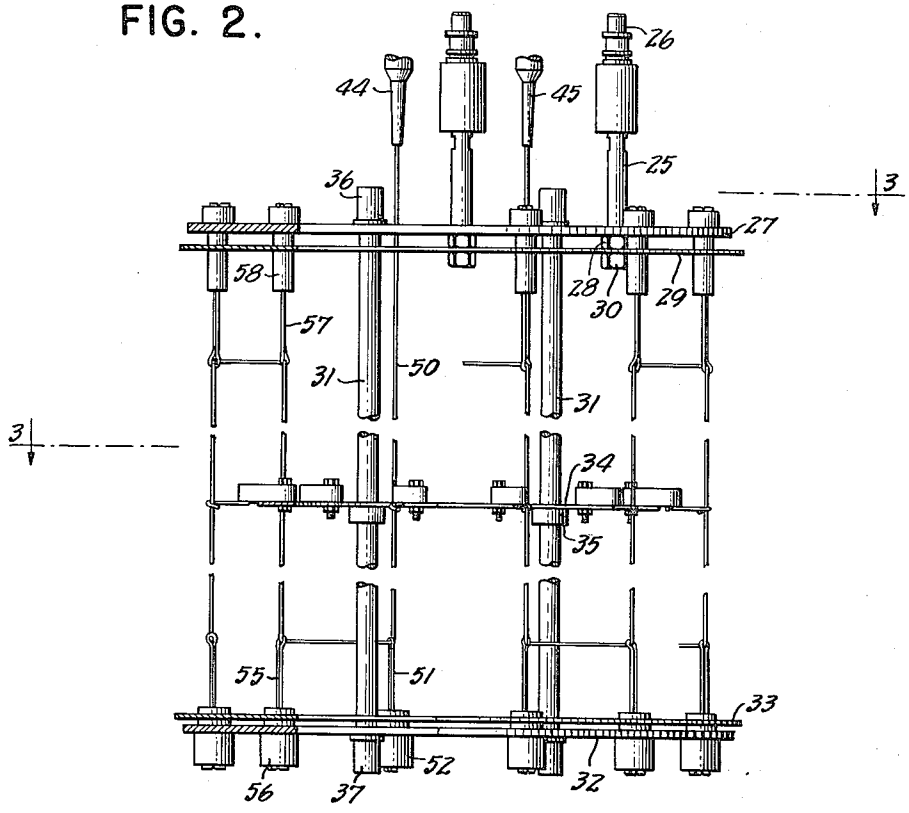

FIG. 3.

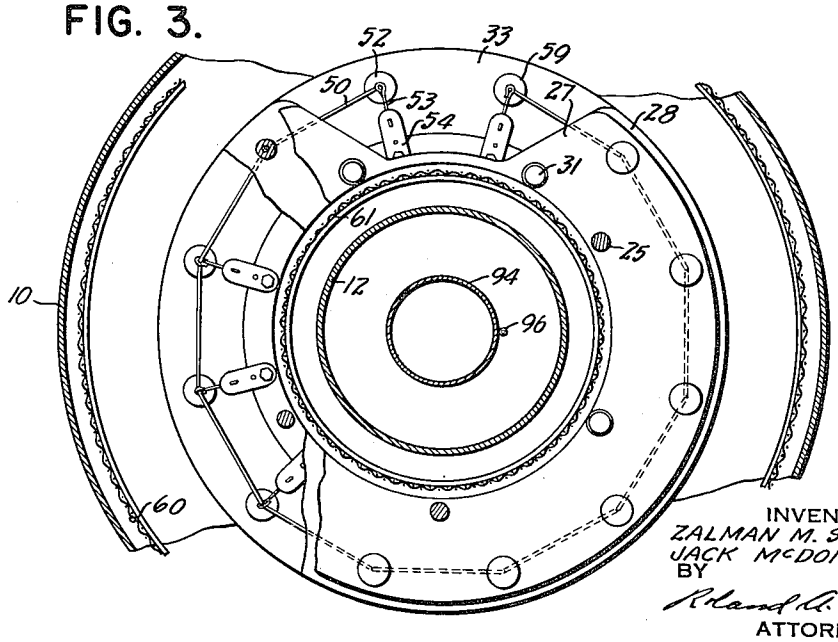

INVENTORS
ZALMAN M. SHAPIRO
JACK McDONALD
BY
Roland A. Anderson
ATTORNEY

United States Patent Office

2,739,566

Patented Mar. 27, 1956

2,739,566

APPARATUS FOR THE PRODUCTION OF COATINGS OF PURIFIED METALS

Zalman M. Shapiro and Jack McDonald, Pittsburgh, Pa., assignors, by mesne assignments, to the United States of America as represented by the United States Atomic Energy Commission

Application June 24, 1953, Serial No. 363,774

1 Claim. (Cl. 118—49)

This invention relates to the production of purified metals employing thermal reduction or decomposition of metal compounds. More particularly, the invention teaches an improved method and apparatus for producing the purified metal in massive shapes, preferably as elongated rods, and at a rate of deposition substantially greater than any previously attained by conventional processes. In carrying out the invention, advantage is taken of the beneficial results provided by a generous cooling effect in dissipating the heat evolved during the several phases of the process.

The invention is adapted to the production of purified metals, the halide vapors of which are susceptible to thermal decomposition, and including, but not by way of limitation, zirconium, hafnium, titanium, silicon and vanadium. For descriptive purposes, one usage of the invention, namely the production of crystal bar zirconium employing iodine as the halogen agent, is described hereinbelow, although it will be understood that the invention is in no way intended to be limited to that specific usage.

An object of the invention is to provide an improved method and apparatus for purifying metals by thermal decomposition techniques using an improved system of removing heat radiated from the hot metal.

A second object is to provide an improved method and apparatus for increasing the rate of deposition of a purified metal upon a hot filament.

A third object is to provide an improved means for increasing the cross sectional area of flow of a metal halide vapor between a relatively cool vapor source and a relatively hot filament.

A fourth object is to provide an improved means for controlling the relative temperatures of a metal sponge and a filament spaced therefrom.

Another object is to provide an improved method for producing larger bars of deposited metal as a result of more efficient heat dissipation.

Still a further object is to provide an improved means for mounting a hot filament.

Still another object is to provide an improved assembly having a filament disposed intermediate a plurality of sources of metal halide vapor and adapted to receive a deposit of metal simultaneously from said sources.

Other objects and advantages will become apparent as the description proceeds and when considered in conjunction with the accompanying drawings in which:

Figure 1 is a view partly in section, showing an apparatus in which the deposition of purified metal according to the process of the invention may be carried out;

Figure 2 is a general elevation view of the removable filament-mounting portion of the apparatus with parts of the looped filament and supports being omitted in the interest of clarity; and

Figure 3 is a plan view, partly broken away along the line 3—3 of Figure 2, showing the position occupied by the removable filament-mounting portion of the apparatus with respect to the materials container.

In the co-pending application of Zalman M. Shapiro, Serial No. 320,315, filed November 13, 1952, and now Patent 2,717,915, there is disclosed and claimed an apparatus for producing a purified metal, certain useful features of which are similar to the features which we prefer to employ in our present apparatus. However, our invention also incorporates certain new and distinctive features contributing to an increased efficiency with economical advantages not obtainable by that earlier invention.

When employing our invention for the production of crystal bar zirconium, it is contemplated that the zirconium sponge, the mounting of the filament, and the source of halogen vapor will first be arranged at any suitable station into a compact closed assembly, which assembly will then be positioned in a heat-transfer housing for carrying out of the deposition process described below, and after completion of the deposition process will be removed from the heat-transfer housing and opened, with suitable precaution, at still another station in order to remove the deposited material and to permit preparation of another assembly for a subsequent cycle of operation.

Such preferred assembly is best shown in Figure 1, mounted within the heat-transfer housing, and comprises a materials container having a cylindrical outer wall **10** provided with a flange **11** adjacent its top. A shorter inner wall **12** open at its lower end and closed by a curved head portion **13** at its upper end is mounted concentrically with the outer wall by means of an apertured bottom plate **14**. It will be understood that the materials container is to be subjected to high temperatures and is to contain a corrosive medium and also is to be evacuated initially to a low pressure, in the order of 10^{-5} to 10^{-6} mm. of mercury. Accordingly, it is constructed of any non-contaminating material resistant to the general corrosive action of hot metal halides ad halogens. As sufficient mechanical strength must also be provided for the re-entrant inner wall, a series of reinforcing webs **15** are located between the bottom plate **14** and the extreme lower end of wall **12**. Except for these webs the container preferably is made of Hastelloy-B, a commercial alloy having approximately 65% nickel, 30% molybdenum, 5% iron, or Inconel, a commercial alloy having approximately 80% nickel, 13% chromium and 7% iron. It will, of course, be understood that any portion of the container as well as any part enclosed therein which is liable to be subjected to intensive corrosive action, may however be made of molydenum, tungsten, tantalum or similar temperature and corrosion resistant material.

Attached to the bottom plate of the materials container is a massive weight **16** of any material suitable for immersion in a hot salt bath, which weight is centrally apertured for a purpose later to become apparent. Also, adjacent the flanged top of outer wall **10** a plurality of bored bosses **17** are fixedly mounted on the outer wall and adapted to receive threaded bolts **18**. These bolts are provided at their upper ends with crane hooks **19** which abut against an external cover plate **21** for the heat-transfer housing. Bolts **18** extend through holes in both the flange **11** and the top plate **22** for the materials container and, by means of suitable nuts engaging the bolts and bearing upon the bosses and the top plate **22**, a rigid but demountable assembly may thus be provided. A series of supplementary bolts (not shown) arranged around the periphery of the top plate and flange may be used to assist in tightening the plate upon the flange if such is desired. As in the co-pending Shapiro case, above mentioned, the sealing of the top plate **22** to the materials container and the sealing of externally extending elements appurtenant to that top plate is of importance due to the necessity for maintenance of a high vacuum under high temperatures and corrosive conditions, as well as due to the prime require-

ment of preventing any contamination of the purified metal. Our invention therefore comprehends the use of gold seals at such sealing points and the flange **11** and top plate **22** preferably are provided on their abutting faces with a tongue and groove configuration (not shown) adapted to compress a malleable ring of gold serving as such a seal. Preferably, the holes in the flange and plate do not engage the threaded portion of the bolts **18**, so that the seating and sealing of these two parts may be adjusted gradually by tightening only the nuts upon those bolts and strains incident to supporting the container by the crane hooks will not be transmitted to such a seal.

As will thus be seen, the bolts **18** support the weight of both the materials container and the plate **22** with its supported elements. Depending from plate **22** is the removable filament-mounting portion of the apparatus, as best shown in Figures 2 and 3. By means of a plurality of adjustable rods **25**, preferably formed of Hastelloy-B or Inconel, and threaded at their upper ends **26** for engagement with plate **22**, an upper support plate **27** of the same material may be positioned by the engagement of nuts **28** on said rods. Spaced a short distance below plate **27**, a second plate **29** of larger diameter and thinner cross section is mounted upon the same rods by means of a second nut **30**. This second plate serves a heat shielding function later to become apparent.

By means of elongated metal rods **31**, two of which are shown in Figure 2, a lower annular support plate **32** and a lower annular heat shielding plate **33** may be rigidly mounted in spaced relation to the upper support plate. For the purpose of providing an intermediate support to the looped filament, which has a tendency to bow during the passage of heavy currents therethrough, an intermediate thin annular plate **34** is mounted upon the rods and is supported in position by clamps **35**. The rods **31** are positioned upon the upper and lower support plates by terminal nuts or clamps **36** and **37**, respectively.

As shown in Figure 1, a pair of heavy duty electrodes **40** and **41** extend in sealed relation through top plate **22** and are adapted to have bus bars (not shown) connected thereto at a location external of the heat-transfer housing, as at neck portions **42** and **43**. At their extreme outer ends these electrodes are provided with cooling fluid connections and at their inner ends, within the materials container, are provided with suitable electrode tips **44** and **45** for holding the filament or hot wire. Suitable tips for this usage are described in the co-pending applications, Serial Numbers 257,308 and 257,309, of Zalman M. Shapiro, filed November 20, 1951, now U. S. Patents 2,637,297 and 2,637,298 respectively. Both of the electrodes and the electrode tips are formed of corrosion resistant materials and non-contaminating seals, such as gold, are used in sealing the electrodes to the top plate **22**.

Referring now to Figures 2 and 3, the electrode tip **44** may be mounted in any suitable fashion upon the electrode **40** and spaced with respect to the transverse cross section of the materials container so as to suspend the filament or wire **50** at a radius of the container approximately equally distant from the outer wall **10** and inner wall **12** thereof. The filament preferably is constructed of zirconium, for the illustrated usage of our invention and is about 0.094 inch in diameter, although the precise material or size is not in itself a critical limitation. For example, the filament could also be constructed of tungsten, molybdenum or tantalum. The filament mounted in tip **44** extends downwardly to a keeper **51** mounted in an insulator **52** which in turn is secured upon the lower plates **32** and **33**. As it passes by the intermediate support plate **34**, the filament is engaged by an encircling open-ended bent keeper **53** which in turn is mounted at its other end in an insulating cleat **54** suitably positioned upon plate **34**. The arrangement is such that the keeper **53** exerts a holding force upon filament **50** along a radius of the materials container. Both keepers **53** and **51** are preferably formed of molybdenum wire about 0.030 inch in diameter, but tungsten or tantalum may be employed if desired. The choice of material and size of keeper wire is largely dependent upon its ability to convey away only the proper amount of heat so that no cold spot will develop at its point of attachment to the filament, commensurate of course with its ability to provide the requisite mechanical strength for supporting the looped filament.

As noted in Figure 3, filament **50** passes horizontally along a chord of the cylindrical materials container adjacent its lower end, is engaged by a keeper **55** mounted in an insulator **56** in the lower plates, then passes upwardly to a keeper **57** mounted in an insulator **58** in the upper plates, then continues its extension until it passes upwardly from the last insulator **59** in the lower plates and is terminated in the electrode tip **45**. Moreover, in each of its upward and downward courses it is engaged by a suitable keeper mounted upon a radially disposed cleat upon the intermediate plate **34**. As a result of the thus described mounting, the filament is suspended generally in the boundary of a cylinder which is substantially concentric with the blankets or layers of reacting materials now to be described.

With this preferred arrangement of filament mounting in mind, reference is now made to the means for disposing the reacting material in the materials container. Within the container and spaced from outer wall **10** is a cylindrical foraminous member **60**, such as a screen, preferably formed of molybdenum and resting loosely upon the bottom plate **14**. This member is of sufficient strength to hold a blanket of previously prepared metal sponge between it and the wall **10**. In the practice of the invention taken as an illustration, the sponge may be a zirconium product made by the well known Kroll process involving the reduction of zirconium tetrachloride with magnesium. This sponge is a porous, rather pyrophoric mass and when subjected to iodine vapor will react to form zirconium tetraiodide. This zirconium halide will, in the suitably evacuated and heated materials container migrate to the hot filament or wire **50** and decompose thereon leaving a deposit of purified zirconium and releasing the iodine which then moves back to the sponge where it reforms more zirconium tetraiodide which in turn decomposes on the previous deposit, whereby the process may be continued so long as suitable reacting conditions are maintained. One of the important conditions which this invention comprehends is efficient dissipation of the radiated heat generated in the materials container. Also disposed within the materials container is a second cylindrical foraminous member **61**, of somewhat shorter length than the first member **60**, and arranged to hold a second blanket of the metal sponge against the inner wall **12**. As will thus be apparent, the vertically disposed wire **50** is subjected to a bombardment of metal halide vapor coming in two chief directions, namely from the inner and outer blankets of sponge with the result that a material increase in the rate of deposition, over that obtained in the presence of a single blanket of sponge, is achieved. This conclusion is justified by a comparison of theoretical and actual results making use of the method and means herein disclosed. As an example of the increased rate of deposition theoretically made possible by our invention, assume that the outer member **60** is 22 inches in diameter, the inner member **61** is 10 inches in diameter and the boundary cylinder of the filament is 16 inches in diameter. Assume further that the filament **50** approximates a cylinder for the purpose of diffusion and the temperature of the inner sponge blanket is approximately the same as that of the outer sponge blanket whereby the equilibrium concentrations allowed at both sponge beds are equal. On the basis of these assumptions, the following calculations illustrate roughly the theoretical increase

in growth rate of purified zirconium upon wire **50** in the practice of our invention.

R_i=outside radius of inner sponge bed=5 inches
R_f=radius of filament cylinder=8 inches
R_o=inside radius of outer "sponge" bed=11 inches
q_1=rate of deposition per unit length of cylinder contributed by the outer sponge bed (conventional procedure)
q_2=rate of deposition per unit length of cylinder contributed by the center "sponge" bed
r=radius to any point in the vessel from its axis
D=diffusion constant for any consistant system of units
C_o=iodine concentration at outer sponge bed
C_f=iodine concentration at filaments
C_i=iodine concentration at inner sponge bed

Hence, using the differential equation for diffusion in a cylindrical system

$$q=2\pi r D\frac{dc}{dr}$$

and integrating and substituting the boundary condition for the conventional multiple loop deposition:

$$\int_{R_o}^{R_f}\left[ln\, r\right]=\frac{-2\pi D}{q}\left[C_f-C_o\right]$$

or

$$q_1=\frac{2\pi D}{ln\frac{r_o}{R_f}}\left[C_f-C_o\right]$$

For the proposed system, the total rate of growth q_t is equal to q_1+q_2 where q_2 is found by a similar procedure:

$$q_2=\frac{2\pi D}{ln\frac{R_f}{R_i}}\left[C_f-C_i\right]$$

and since C_i is assumed equal to C_o, the theoretical percentage increase in growth rate is:

$$\left[\frac{q_t}{q_1}-1\right]100=100\left[\frac{\log\frac{R_o}{R_f}}{\log\frac{R_f}{R_i}}\right]=67\%$$

In comparison with the theoretical percentage increase of growth rate of 67%, we have actually found in practice that this is a conservative value and in fact we have achieved an increase in growth rate of 130%.

For the purpose of supplying the halogen material to the materials container, an auxiliary container **62**, preferably of the type disclosed in the co-pending Shapiro application Serial No. 320,315, is mounted upon top plate **22** and communicates with the interior of the materials container through a valved passage **63**. A suitable non-rising stem valve actuatable by handwheel **64** and cooperating with passage **63** through valve housing **65** is provided, the precise details of which form no novel part of the present invention and a full disclosure of which is found in said application. In addition, suitable water cooling connections may be provided at the outer end of valve housing **65** and suitable heating means for vaporizing the halogen content of the container and gold sealing means for the valve seats (not shown) may be placed within the auxiliary container to the end that a halogen such as iodine may be loaded into the container and then be vaporized and transferred through passage **63** into the materials container after which the communication with the auxiliary container may be interrupted, all as described in said Shapiro application.

Further communicating with the materials container for the purpose of establishing a high vacuum therein is a valve housing **70** having a lateral conduit **71** to which

is attached a guard valve assembly **72**. The guard valve within the assembly is adapted to be connected to a suitable high vacuum apparatus at the initial stage of carrying out the process of our invention thereby to evacuate the interior of the materials container. Valve housing **70** preferably contains a non-rising stem valve actuatable by handwheel **73** and adapted to open and close communication between conduit **71** and the interior of the materials container. As in the apparatus shown in Shapiro application Serial No. 320,315, the valve head and valve seat preferably are provided with a gold sealing surface adapted to withstand the corrosive action of the hot vapors and to avoid the introduction of any contaminating material into the system. Furthermore, as in the case of electrodes **42** and **43** and auxiliary container valve housing **65**, the outer end of valve housing **70** is provided with suitable fluid cooling connections for the purpose of conducting away heat received from the materials container to which these elements are attached.

As one of the principal means for dissipating the heat, however, and for providing an increased area of diffusion paths, the heat-transfer and sponge-retaining housing now to be described is used. It will be seen that the invention makes use of a much larger cooling surface on the materials container than is provided by apparatus of the prior art and this in turn is reflected in the growth of larger deposits of purified metal since it permits a larger maximum input of electrical power to the electrodes. Moreover, our invention also makes use of a correspondingly large sponge bed so placed in the container as to provide a larger area for diffusion of the iodine released and a higher concentration gradient. The additional cooling thus effected upon the materials container, plus the additional sponge bed as provided by the invention, favors an accelerated rate of deposition of the metal on the filament because (1) a considerably larger area of path for diffusion of the gases is provided and, (2) the sponge is kept cooler than it would otherwise be and hence there is a resulting lower iodine equilibrium pressure at the sponge and a higher iodine pressure gradient between the filament and the sponge.

The desirable process results thus described may be secured by making use of apparatus including a fixed tank or housing having a cylindrical outer wall **80**, a bottom member **81**, with suitable drain pipes, not shown, and with a top ledge member **82** upon which the cover plate **21** of the removable assembly is loosely positioned, as by a plurality of pins **83**.

The tank or housing is adapted to contain a circulating body of a heat-transfer medium, such as a salt bath which is maintained at a temperature of about 200° C. to 350° C. and which rises to a level such as indicated at **85**. It will thus be seen that the entire materials container is submerged in this bath, which insofar as the temperature reached by the filament **50** is concerned is relatively cool. Thus the hot salt bath is capable of conducting away heat from the hotter container. One suitable composition for the salt bath comprises a mixture of 50% sodium nitrate and 50% potassium nitrite.

The primary circulation of the bath may be effected by an impeller **86** located in standpipe **87** and suitably actuated by motor **88**. Any suitable control means for this motor may be employed in order to provide for the desired rate of circulation of the medium which is moved by impeller **86**. Upper and lower conduits **89** and **90** connect the standpipe with the interior of the housing **80**. Supplementary circulation of the bath is achieved by operation of impeller **91** driven by a separate motor **92** mounted upon the ledge **82** of the housing, motor **92** likewise being controlled by any suitable separate control means. Impeller **91** cooperates with the open ended U-shaped conduit located within the housing and arranged to be totally submerged by the salt bath. This conduit, which preferably includes a longer outer

leg 93 and a shorter inner leg 94 joined by the horizontal section 95, is mounted rigidly in any suitable manner (not shown) within the housing and as will be noted from Figure 1, the inner leg is centrally disposed with respect to the inner re-entrant wall 12 of the materials container. Accordingly, as the removable materials container is inserted into the heat-transfer medium housing, the apertured weight 16, serving to overcome the buoyancy of the hollow container, fits around the rigid inner leg 94 of the conduit. For the purpose of expelling any air entrapped in the inner re-entrant tube formed by wall 12, a small tube 96 may be rigidly mounted upon the fixed legs 93 and 94 and horizontal section 95. One end of this tube may terminate adjacent the upper head portion 13 of such wall 12 and the other end may terminate above the salt level as shown.

The positive driving force exerted by impeller 91 in the shorter leg 94 of the conduit thus provides a turbulent moving body of heat-transfer medium ejected from the top of conduit leg 94. This body of the medium is directed against the concave surface 13 of the materials container and along the wall 12, which is in close contact with the inner blanket of sponge, thus serving to carry away heat from that blanket as does the moving body of heat-transfer medium which is in contact with the outer wall 10, and which simultaneously serves to remove heat from the outer blanket of the sponge. As will be apparent, the heat radiated from the hot wire 50 receiving electrical current from its electrodes would, despite the circulation thus described, still cause a continuing rise in the temperature of the salt bath were no other cooling means provided. Accordingly, when the temperature of the circulating bath begins to reflect this continued heat input, a plurality of jets 100, 101, 102 and 103 directing water or other vaporizable liquid medium against the wall 80 then come into action. Vapor formed by the vaporization of this medium is confined within the jacket 104 and may be led away through conduit 105 to a point of disposal. Condensate of such vapor may be drained from the jacket by a suitable outlet pipe 106.

With the foregoing in mind, reference now is made to a preferred mode of carrying out the invention beginning with the initial cycle of operation. With the materials container and attached halogen container 62 in empty cooled condition at a separate station provided with any suitable furnace means, a charge of iodine, preferably in solid form, is first placed in the container 62. The zirconium sponge, preferably in wet condition for safety, is loaded into the materials container and held in blanket form behind of the screen members 60 and 61. The filament supporting assembly is attached to the cover plate 22 and then carefully inserted in the materials container while suspended from cover plate 22. Both the iodine generator and materials container are properly sealed. Vacuum thereupon is applied to guard valve assembly with the thus described apparatus disposed in a suitable furnace.

Heat is slowly applied to the materials container until the sponge reaches a temperature in the order of 100° C.–115° C., the vacuum meanwhile dehydrating the sponge and evacuating the materials container. In no case is a reaction between the heated sponge and water vapor permitted to take place. After the sponge is thus heated and dehydrated, the temperature is raised to 350° C. for further outgassing and the iodine in the container 62 is then vaporized and permitted to enter the materials container through conduit 63 after which communication with the container 62 is cut off. While the iodine is distilled in, the sponge is maintained at about 350° C., the heat-transfer medium in the fixed housing 80 likewise having been separately raised to a temperature between 200° C. and 350° C. (preferably 250° C.). Valves 70 and 72 are closed and the vacuum connection may now be disconnected and by means of a crane the prepared assembly may now be set in position within housing 80.

Upon connecting a source of electrical power to electrodes 42 and 43, the starting wire or filament 50 quickly attains a high temperature in the order of 1400° C. The zirconium tetrahalide, whose vapor now fills the materials container, accordingly undergoes thermal decomposition at all points along that wire and leaves thereon a deposit of purified zirconium metal. Concentration gradients for the zirconium tetraiodide and the liberated iodine molecules are established and provide the driving force for the transfer of zirconium from the sponge to the wire. Thereafter by keeping the sponge relatively cool through the circulation of the heat-transfer medium the large volume of heat radiated from the wire may be dissipated without upsetting the equilibrium pressures of those vapors.

As is known, a constantly increasing supply of electrical current must be provided during the growth of the bar of purified material and this may rise to the order of 1250 amperes or more, depending upon the size of the bar which one wishes to grow. Such a current is needed in order to keep the bar at the requisite temperature. Bars in the order of greater than one inch in diameter may be grown on the wire 50 in the practice of our invention. As above pointed out, these bars also may be grown faster than with previously known apparatus, and although a theoretical increase in growth rate of 67% was shown by the foregoing illustration, it will be noted that in practice an actual increase of 130% was achieved. Accordingly, a substantial improvement in the economics of the process is provided.

Following growth of the bars to the desired size the electrical current to the electrode is disconnected and the materials container is lifted as a unit from the housing 80 and moved to a separate station where it can be cooled and opened with safety precautions. The residue of the zirconium sponge is highly pyrophoric. These precautions preferably include means for blanketing the materials container with an inert gas, such as helium or argon, and for flooding the container with water. Upon opening the container the deposited purified material is removed and a new assembly of filament, electrode tips, keepers and the like are provided for the subsequent cycle of operation.

Having thus described our invention, it will be apparent that various changes in the construction and materials used, and in the sequence of steps employed, may be made without departing from the scope or intent thereof. Accordingly, it is not desired to limit the invention to the exact details shown or description made, except as defined in the following claim.

What is claimed is:

Apparatus for producing a metal by thermal decomposition of the metal halide comprising, in combination, a housing adapted to contain a heat transfer medium, a container mounted on said housing in contact with said medium, said container being adapted to house a charge of metal sponge, means for disposing said sponge in spaced layers within said container, a removable top member for said container, a removable top member for said container, means for evacuating said container, a starting assembly comprising a starting wire disposed in said container intermediate said spaced layers and means for supplying electrical current to said wire, said starting assembly also including a first support plate, a pair of electrodes mounted adjacent said plate, detachable tips attached to said electrodes, a second support plate, a third plate intermediate said first and second plates and disposed parallel thereto, spacer rods between said plates for providing a fixed plate assembly, said wire being affixed at its ends to said electrode tips, means attached to said first and second plates in insulated relation thereto for holding said wire in a plurality of loops arranged in series

and with a major axis perpendicular to said plates, and means attached to said third plate in insulated relation thereto for holding said wire at a fixed radius of said third plate.

References Cited in the file of this patent

UNITED STATES PATENTS

1,306,568	Weintraub	June 10, 1919
1,671,213	Van Arkel et al.	May 29, 1928
1,709,781	DeBoer et al.	Apr. 16, 1929
2,253,981	Peyches	Aug. 26, 1941
2,356,237	Geller	Aug. 22, 1944
2,377,478	Bowen	June 5, 1945
2,551,341	Scheer et al.	May 1, 1951
2,564,337	Maddex	Aug. 14, 1951
2,602,033	Lander	July 1, 1952

OTHER REFERENCES

Alnott et al.: The Electrochemical Society, Preprint 88–30. Columbia University, October 17, 1945.