(12) INTERNATIONAL APPLICATION PUBLISHED UNDER THE PATENT COOPERATION TREATY (PCT)

(19) World Intellectual Property Organization
International Bureau

(43) International Publication Date
23 June 2011 (23.06.2011)

PCT

(10) International Publication Number
WO 2011/072408 A1

(51) International Patent Classification:
G02B 5/18 (2006.01)

(21) International Application Number:
PCT/CH2010/000294

(22) International Filing Date:
22 November 2010 (22.11.2010)

(25) Filing Language: English

(26) Publication Language: English

(30) Priority Data:
09405227.1 18 December 2009 (18.12.2009) EP

(71) Applicant *(for all designated States except US)*: **BOEGLI-GRAVURES S.A.** [CH/CH]; Rue de la Gare 24-26, CH-2074 Marin (CH).

(72) Inventor; and

(75) Inventor/Applicant *(for US only)*: **BOEGLI, Charles** [CH/CH]; Rue de la Gare 24, CH-2074 Marin (CH).

(74) Agent: **AMMANN PATENT ATTORNEYS LTD. BERNE**; Schwarztorstrasse 31, CH-3001 Berne (CH).

(81) Designated States *(unless otherwise indicated, for every kind of national protection available)*: AE, AG, AL, AM, AO, AT, AU, AZ, BA, BB, BG, BH, BR, BW, BY, BZ, CA, CH, CL, CN, CO, CR, CU, CZ, DE, DK, DM, DO, DZ, EC, EE, EG, ES, FI, GB, GD, GE, GH, GM, GT, HN, HR, HU, ID, IL, IN, IS, JP, KE, KG, KM, KN, KP, KR, KZ, LA, LC, LK, LR, LS, LT, LU, LY, MA, MD, ME, MG, MK, MN, MW, MX, MY, MZ, NA, NG, NI, NO, NZ, OM, PE, PG, PH, PL, PT, RO, RS, RU, SC, SD, SE, SG, SK, SL, SM, ST, SV, SY, TH, TJ, TM, TN, TR, TT, TZ, UA, UG, US, UZ, VC, VN, ZA, ZM, ZW.

(84) Designated States *(unless otherwise indicated, for every kind of regional protection available)*: ARIPO (BW, GH, GM, KE, LR, LS, MW, MZ, NA, SD, SL, SZ, TZ, UG, ZM, ZW), Eurasian (AM, AZ, BY, KG, KZ, MD, RU, TJ, TM), European (AL, AT, BE, BG, CH, CY, CZ, DE, DK, EE, ES, FI, FR, GB, GR, HR, HU, IE, IS, IT, LT, LU, LV, MC, MK, MT, NL, NO, PL, PT, RO, RS, SE, SI, SK, SM, TR), OAPI (BF, BJ, CF, CG, CI, CM, GA, GN, GQ, GW, ML, MR, NE, SN, TD, TG).

Declarations under Rule 4.17:

— *of inventorship (Rule 4.17(iv))*

Published:

— *with international search report (Art. 21(3))*

— *before the expiration of the time limit for amending the claims and to be republished in the event of receipt of amendments (Rule 48.2(h))*

(54) Title: METHOD AND DEVICE FOR GENERATING COLOUR PATTERNS USING A DIFFRACTION GRATING

FIG. 8

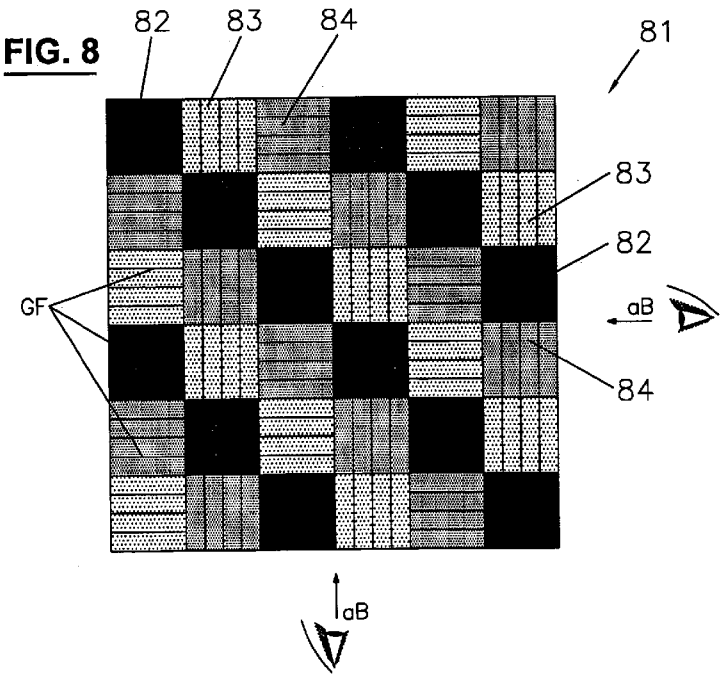

(57) Abstract: In the method for creating colour patterns for technical applications and visible for the human eye by means of diffraction gratings through light irradiation, diffraction grating arrays are produced directly on a solid body surface in a laser microstructuring process by at least one laser installation in the nanosecond range or in the pico- or femtosecond range, each diffraction grating array being composed of subareas (81) whose longitudinal dimension has a value below the resolving ability of the eye and which contain at least one pixel (81, 82, 83), a pixel being a limited diffraction grating structure for producing a spectral colour. The direct application of such colour-producing diffraction grating structures to a solid body surface enables a large variety of decorative and authentication possibilities ranging from embossing tools to jewellery.

WO 2011/072408 A1

METHOD AND DEVICE FOR GENERATING COLOUR PATTERNS USING A DIFFRACTION GRATING

The present invention relates to a method and device for producing colour patterns by means of diffraction gratings, according to the preamble of claim 1. By definition, the term "colour pattern" encompasses all kinds of modifications of a surface that produce a colour, particularly also in the human eye, the colours generally but not exclusively being mixed colours that are created by diffraction of polychromatic light on corresponding diffraction gratings. The colours or mixed colours, respectively, may appear in structures, signs, logos, or in specific applications as authentication features.

The production of spectral colours, primary colours, and thence of mixed colours by means of grating structures has been known for a long time. As representative examples thereof, the references WO 2006/066731 A1, WO 98/23979, or EP 0 585 966 A2 may be cited. All these and still other references of the prior art have in common that the grating structures are produced by laser or electron beam lithography in a relatively soft synthetic substrate. These lithographic methods require multiple and partly complex process steps for producing the grating structures that are well known from the literature.

This applies also for the diffraction-based optical grating structure according to the US 2006/0018021 A1 publication, which discloses an elliptical structure.

A number of application fields are known where optical features are used which have to meet high aesthetic requirements, on one hand, and serve for the authentication of goods, on the other hand. A group of such applications

are e.g. packaging foils for cigarettes, foods, or pharmaceuticals, these foils generally being embossed by means of embossing rollers; or the surface of a decorative object, e.g. a part of a watch case, a watchglass of glass or sapphire, or a coin may be the object. Particularly in packaging foils, coloured patterns might gain increasing significance if the metallised layer were to be further reduced or entirely omitted. With regard to the aforementioned embossing tools or decorative objects, it is a metal surface that is being structured, and in the case of embossing tools, a hard material layer. This is e.g. disclosed in WO 2007/012215 A1 to the applicant of the present invention.

On this background, it is an object of the present invention to provide for a method and device for creating grating structures for producing colour patterns having a higher diffraction intensity and spectral colours of higher brilliance and that are applied either to embossing tools such as embossing rollers or embossing dies and from there to packaging foils, or to decorative objects. This object is attained by the method according to claim 1 and by the device according to claim 13.

The invention will be explained in more detail hereinafter with reference to drawings of exemplary embodiments.

Fig. 1 shows a schematic diagram of a device according to the invention having two laser installations for creating diffraction grating arrays directly on a solid body surface,

Fig. 2 shows laser beam intensity shaping by means of a mask and diaphragm combination,

Fig. 3 shows a preferred blazed grating structure in a sectional view,

Fig. 4 shows a first mask for creating the blazed grating structure of Fig. 3,

Fig. 5 shows a second mask for creating the blazed grating structure of Fig. 3,

Fig. 6 shows another diffraction grating in the form of a column or blind hole grating having triangular column or pit cross-sections,

Fig. 7 shows a diffraction grating array with the associated colour pixels, and

Fig. 8 shows a subarea that is no longer resolvable for the human eye and is formed of a plurality of different colour pixel areas.

In Fig. 1, a device for producing diffraction gratings with two laser installations is illustrated of which the one on the left in the drawing is an excimer laser installation that is suitable for producing e.g. blazed grating arrays and the laser installation on the right is a femto- or picosecond laser installation that serves for creating masks and/or diaphragms for producing the grating structures, on one hand, and on the other hand is apt either to produce directly acting ripple grating structures or to superpose the grating structures produced by the excimer laser with a second grating structure that is based on a variation of the spacing between the ripples.

The first laser installation L1, comprising a KrF excimer laser having a wavelength of 248 nanometers (nm), serves to

produce microstructures in the solid body surface according to the mask projection technique, and the second laser installation L2, comprising a femtosecond laser 15 having a centre wavelength of 775 nm or its frequency-doubled or -tripled wavelength, serves to produce either nanostructures, e.g. ripple grating structures, in the solid body surface, or to create masks, according to the focus technique. For the purposes of the present application, the term "solid body" is meant to include any substrate in whose surface microstructured diffraction gratings can be produced by means of a laser, e.g. glass, watchglasses from glass or sapphire, ceramics, suitable synthetic materials, and mainly metallic surfaces on jewellery or coins, and particularly also hard material coated surfaces of embossing tools such as embossing dies and embossing plates for embossing packaging foils as well as organic solid bodies. The surface may previously have been pre-treated, chemically or mechanically processed, and structured. As a hard material coating, e.g. tetrahedrally bonded amorphous carbon (ta-C), tungsten carbide (WC), boron carbide (B_4C), silicon carbide (SiC), or similar hard materials may be contemplated.

The microstructures may e.g. be so-called blazed gratings having grating periods of 1 to 2 µm, and the nanostructures may e.g. be self-organized ripple structures having periods of 300 nm to 1000 nm which act as optical diffraction gratings. As will be explained below, any periodic array of the diffraction-optically active structures is possible that produces an angular-dependent dispersion, i.e. a separation into spectral colours, by diffraction upon irradiation with light.

In Fig. 1, a first laser, an excimer laser 1 is shown whose beam 2 has a rectangular cross-section here. The intensity of this laser beam can be adjusted and varied by an

attenuator 3. By means of homogenizer 3A and field lens 3B, a homogenous intensity distribution across the laser beam cross-section is created in homogenous spot HS. The intensity profile across the laser beam cross-section that is required for the microstructure to be produced is shaped from this homogenous intensity distribution by means of mask 18 positioned in homogenous spot HS.

The geometrical shape of the opening in diaphragm 6 arranged after the mask, and preferably in contact therewith, produces the cross-sectional geometry or contour shape of the intensity profile of the laser beam shaped by mask 18. Mask 18 and diaphragm 6 are located in a mask and diaphragm changer device.

Instead of a KrF excimer laser, an ArF excimer laser having a wavelength of 193 nm, a fluor (F_2) laser having a wavelength of 157 nm, or a XeCl excimer laser having a wavelength of 308 nm can be used as first laser 1.

Instead of a femtosecond laser, a picosecond laser of the Nd:YAG type having a wavelength of 1064 nm or its frequency-doubled wavelength of 532 nm or its frequency-tripled wavelength of 266 nm can be used as second laser 15.

The laser beam shaped by mask 18 and diaphragm 6, see also Fig. 2, impinges on a deflection mirror 7 that guides the beam through an appropriate imaging optics 8 for this laser beam which images the appropriate laser intensity profile for the microstructure onto surface 9 of the ta-C layer on embossing roller 10 at a predetermined imaging scale of e.g. 8:1. By rotation arrows 11 it is indicated that embossing roller 10 can be rotated about its longitudinal axis by predetermined angles. Embossing roller 10 is arranged on a displacing device 32.

In order to adjust, monitor, and stabilize the power and thus the intensity of the laser beam, a small fraction of the laser beam is directed by means of beam splitter 4 onto a power meter 5 that delivers data for the control of attenuator 3 and/or laser 1. This power meter 5 may selectively be exchanged for a laser beam intensity profile measuring device 5A, which is indicated by a double arrow in Fig. 1. Devices 5 and 5A are positioned at the same distance from beam splitter 4 as mask 18 located in homogenous spot HS in order to allow a correct measurement of the power and of the intensity distribution of the laser beam in homogenous spot HS, i.e. in the mask plane. A camera 26 serves for observing the microstructuring process. To this end, deflection mirror 7 has an interference layer system that reflects the excimer laser radiation of 248 nm wavelength but transmits visible light.

To adjust a precisely determined position of the imaging plane of the laser beam imaged by imaging optics 8 onto the ta-C layer to be structured over the entire surface area of embossing roller 10, the position and the production-related deviations of the embossing roller from the ideal geometry are measured by means of device 16 for the position survey of the embossing roller, e.g. by means of trigonometric measuring methods. These measuring data are then used for the automatic adjustment of embossing roller 10 by means of displacing device 32 and for the correction control of the z-axis of displacing device 32 during the structuring process.

As already briefly mentioned in the description of the exemplary embodiment according to Fig. 1, the intensity profile required for the excimer laser structuring process

according to the mask projection technique is shaped by means of a mask and a diaphragm.

This process will be explained in more detail herebelow with reference to Fig. 2: From the homogenous intensity distribution 74 of laser beam 29 in homogenous spot HS, the intensity profile across the laser beam cross-section required for the microstructure to be produced in the ta-C layer on embossing roller 10 is shaped by means of mask 18 positioned in homogenous spot HS. In the present schematic view, mask 18 has transparent areas 19 arranged in a grid-like manner and surface areas 20 that are opaque to the laser beam, and thus forms a grid-like intensity profile 75 with cuboidal intensity profile portions.

Diaphragm 6, which in the direction of the laser beam is arranged after the mask and preferably in contact therewith, produces the cross-sectional geometry of the intensity profile of the laser beam shaped by mask 18 by the geometrical shape of its opening or transparent surface area. In the present illustration, the shape of diaphragm opening 6T or the surface area of the diaphragm within the opaque portion 6P that is transparent to the laser beam is in the form of a triangle, and consequently, after the diaphragm, the intensity profile 76 of laser beam 29A exhibits a triangular cross-sectional geometry.

In Fig. 2, the grating period of mask 18 and the thickness as well as the spacing of the cuboidal intensity profile portions of laser beam intensity profile 75, 76 after the mask are depicted on a strongly enlarged scale in the x coordinate direction. The grating period of the mask measures in an example at an imaging ratio of the mask projection system of 8:1, 4 to 20 µm in order to produce e.g. grating structures having grating periods of 0.5 to 5

µm in solid body surface 9, e.g. a ta-C layer on embossing roller 10, by means of laser beam 29A shaped by the mask. In reality, with equal sizes of the surface areas of homogenous spot HS and of the structured area of mask 18 of e.g. 8 mm x 8 mm = 64 mm^2, the structured mask area, in contrast to the schematic illustration of Figure 2, consists of a stripe grating having 2000 to 400 grating periods, and the laser beam shaped therewith consists of 2000 to 400 cuboidal intensity profile portions.

The size, shape, spacing, position, and number of transparent surface areas of mask 18, hereinafter called the mask structure, determine the laser beam intensity profile for creating the microstructure having a predetermined optical effect in the ta-C layer, and diaphragm 6 determines the cross-sectional geometry of the laser beam intensity profile and thus the geometrical shape of the microstructured area element on the embossing roller. The term "area element" is used here to designate the surface on the embossing roller or embossing die that is structured by the laser beam shaped by the mask and the diaphragm and imaged onto the ta-C coated roller surface in a laser beam pulse sequence without a relative movement of the laser beam and the roller surface.

Consequently, by a variation of the mask structure, and particularly by rotating the mask about the optical axis of the laser beam by predetermined angles, the orientation of the laser beam intensity profile shaped by the mask and imaged on the ta-C layer of the embossing roller by means of focusing optics 8 can be varied and thus the optical effect of the microstructured area element upon irradiation with polychromatic light, e.g. the viewing direction and the viewing angle, as well as colour and intensity.

By rotating diaphragm 6 about the optical axis of the laser beam by predetermined angles, the orientation of the cross-sectional geometry shaped by the diaphragm of the laser beam imaged on the ta-C layer on the embossing roller by means of the focusing optics is varied and thus the orientation of the laser-structured area element on the surface of the embossing roller.

The microstructured area elements may either be juxtaposed according to a particular pattern or, after rotating the mask by a predetermined angle, superposed with the same microstructure under this predetermined angle. Furthermore, if different masks are used, different microstructures can be superposed in an area element. If they are juxtaposed, the area elements may have the same or different surface shapes and microstructures.

When white light radiation, near-sunlight, is diffracted or when a diffraction grating is irradiated with polychromatic light, e.g. with daylight fluorescent lamps or light bulbs, hereinafter briefly called "light", due to the wavelength-dependent diffraction angle, the so-called diffraction angular dispersion occurs, i.e. a separation into the spectral colours whose photons have a particular wavelength, i.e. into monochromatic light. Therefore, if none of the diffraction orders overlap, only these spectral colours are observed in the diffracted light.

According to the invention, by means of diffraction grating arrays, mixed colours are created by the superposition of multiple photon wavelengths of the spectral colours which may be viewed under one or multiple predetermined viewing angles and one or multiple predetermined azimuthal viewing directions of the diffraction grating arrays. By means of diffraction grating arrays in a solid body surface having

different grating periods in the microscopic subareas = colour pixel areas below the resolving ability of the human eye, the mixed colours are preferably produced, upon irradiation of the diffraction grating array with light, from photons of the three different primary spectral colour wavelengths red, green, and blue appearing in the diffraction spectrum, the wavelengths for the primary spectral colours being selected depending on the intended application. Thus, if the mixed colour is to be viewed by the human eye, for the primary spectral colour red, a wavelength λ_{red} of 630 nm, for green, a wavelength λ_{green} of 530 nm, and for blue, a wavelength λ_{blue} of 430 nm are e.g. advantageous.

The diffraction grating array may e.g. be composed of colour pixel diffraction grating areas producing the primary colours red, green, and blue, analogously to the cone photoreceptors of the human eye which contain three different types of visual pigments that are mainly sensitive to red, green, and blue. Applicable diffraction grating types are e.g. groove and rib gratings, column grid gratings, and blazed gratings that are e.g. produced by excimer laser structuring according to the mask projection technique, or self-organized ripple gratings having predetermined, adjusted ripple grating periods that are produced by femto- or picosecond laser irradiation according to the focus technique, or by superposition of both structures.

For a predetermined angle of incidence of the light, or on diffuse irradiation, respectively, the grating period and the orientation of the diffraction grating within the colour pixel area determine the diffraction directions of the spectral colours and thus the viewing angle and the azimuthal viewing direction of the primary colour of the

individual colour pixel. In this respect, the wavelengths of the mixed colour have to be chosen and the diffraction gratings of the arrays aligned such that the diffraction angle and the diffraction direction of at least one diffraction order are the same for each wavelength of the mixed colour in order to achieve an effective colour mixture under at least one viewing angle in at least one azimuthal viewing direction.

Hereinafter, the creation of a blazed grating structure as well as the production of a suitable mask for creating the blazed grating structure will be described with reference to Figures 3 to 8. In a blazed grating, the maximum of the separating function and thus the highest intensity maximum can be shifted from the maximum of the 0th diffraction order to a maximum of a higher diffraction order through a variation of the inclination of the steps, i.e. through a variation of blaze angle α_B, since the maximum of the separating function and thus the highest intensity maximum is always located in the reflection direction relative to the step normal SN. When α_B varies, the diffraction angles α_m = viewing angles of the different diffraction orders and thus the positions of the maxima of the grating diffraction remain unchanged as long as the grating period g and the angle of incidence α_e of the incident light are kept constant. Furthermore, in Fig. 3, s denotes the blazed grating side, h the blazed grating height, eS the incident beam, GN the grating normal, and SN the step normal.

Since nearly the entire grating surface, or more precisely the surface formed by the step width s multiplied by the grating furrow length and the number of furrows, is utilized for the diffraction, the diffraction intensities and thus the observed brilliance of the diffracted spectral colours are substantially higher in a blazed grating than on

diffraction on a simple stripe grating = groove and rib grating.

The blazed grating structure of Fig. 3 is produced by means of mask of Fig. 4, this mask consisting of a quartz glass substrate whose opaque surface may be produced by a femtosecond laser or F_2 laser beam while the transmitting triangular areas which are to produce the blazed grating structure upon irradiation with the foregoing excimer laser and simultaneous scanning of the mask are spared. By the irradiation with femtosecond laser pulses or fluor laser pulses, the surface of the quartz substrate is roughened and modified so that the incident light is scattered but not absorbed. The term "modified" designates an alteration of the material density, structure, and refractive index of the substrate here. In this manner, a very low thermal load, a high dimensional accuracy, and a very long lifetime of such masks are ensured.

In the production of the mask in the quartz glass substrate by means of the femtosecond laser according to the focus technique or the F_2 laser according to the mask projection technique, the nontransparent area that leaves the transmitting transparent triangular areas free is produced by scanning with the smallest possible focus or imaging cross-section F and overlapping laser pulses that are represented in Fig. 4 as small grey filled circles of the fs laser or small black filled circles of the F_2 laser. The small squares indicate that square cross-sectional shapes of the laser beam may be used as well. In this manner, except for the transmitting triangular areas shown in white, the entire surface area shown in grey in Fig. 4 is scanned. More specifically, the surface of the scanned areas is roughened and modified with a suitable fluence of the laser beam in such a manner that these areas strongly scatter the incident

laser beam portions of the excimer laser and thus act as opaque areas for the laser beam.

The quantity G is the base of the transmitting triangle and is equal to 8 x grating constant g since an imaging ratio of 8:1 is used here for producing the blazed grating according to the excimer laser mask projection technique by means of this mask. Correspondingly, H is the height and φ the base angle of the transmitting triangle, and I is the distance between the transmitting triangles in the mask scanning direction. If an F_2 laser installation is used, a different imaging ratio of 25:1 is used.

Blazed grating structures may alternatively be produced by means of stripe masks 79 according to Fig. 5, the stripe mask having two different stripe widths as required for producing a blazed grating furrow, whose transmittance varies between 0 and 1 and between 1 and 0 over the respective stripe width according to predetermined linear or step functions. Here again, the indications 8g and 8g x sin α_B result from the imaging ratio of 8:1 used in the creation of the blazed grating structures according to the mask projection technique.

There are a large number of possible variations in the production of suitable masks that may by created by means of fs or F_2 laser installations. The selected masks are placed together with suitable diaphragms in a changer device for producing the blazed grating structures in the first laser installation L1, i.e. for an excimer laser 1 according to the mask projection technique. The diaphragms can be produced according to the same production technique as the masks. As substrates for masks or diaphragms, quartz glass (SiO_2), sapphire (Al_2O_3), calcium fluoride (CaF_2), or magnesium fluoride (MgF_2) may be used.

The femtosecond laser can be used to produce ripples that are arranged in a grating structure and allow to create spectral colours that can be mixed. For the adjustable creation of different ripple spacings which produce the desired grating constant for the creation of the respective spectral colour, the plane of the substrate is inclined by a determined angle relative to the laser beam during the creation of the ripples.

Since, as already mentioned, the eye is still just able to resolve an area of 200 µm x 200 µm, the maximum side length of a square colour pixel must be smaller than 200 µm divided by three = 66,67 µm. Then, to produce a mixed colour, a subarea of 200 µm x 200 µm contains at least 9 square colour pixels for the primary colours red, green, and blue, each colour pixel by definition containing a single spectral colour as the primary colour. Thus, for a colour pixel side length of 33,33 µm, a subarea 81 according to Fig. 8 contains a total of 36 square colour pixels 82, 83, 84 for the primary colours red, green, and blue.

These orders of magnitude enable a new class of authentication features where in a particular subarea e.g. one or only a few colour pixels of a different colour are interspersed that are not visible to the eye but detectable by an adapted spectrometer.

Herebelow, an exemplary calculation for a grating structure according to subarea 81 of Fig. 8 is indicated. For a side length of a square colour pixel of 33.33 µm, perpendicular light incidence, and a diffraction angle = viewing angle α_m for red, green, and blue of 30° with the calculated values for the grating periods of g_{red} = 1.26 µm, g_{green} = 1.06 µm, g_{blue} = 0.86 µm, the red pixel square contains 29 grating

periods, the green pixel square 38 grating periods, and the blue pixel square 47 grating periods.

The diffraction intensity of a colour pixel is a function of the number of grating periods, i.e. of the total grating furrow length within the colour pixel, and of the wavelength of the primary colour. Intensity control can only be achieved via the size of the surface area or the number of individual primary colour pixels, respectively. In this regard, different factors such as the light source have to be taken into account, i.e. e.g. sunlight during the day, in the morning or in the evening, daylight fluorescent lamp, light bulb or the like, which have different intensity characteristics over the emitted wavelength range and thus influence the intensity of each spectral colour. Furthermore, the human eye, i.e. the photopic spectral sensitivity of the human eye to the selected wavelengths of the primary colours has to be taken into account.

According to calculations based on the DIN 5033 standard colour chart, the colour white is e.g. obtained from the aforementioned spectral colours red, green, and blue produced by grating diffraction in a viewing direction with the following pixel layout when a subarea of 200 µm x 200 µm made up of 36 colour pixels having a pixel surface area of 33.33 µm x 33.33 µm each is composed of: 14 red colour pixels 82, 10 green colour pixels 83, and 12 blue colour pixels 84. According to the same calculations, the colour pink is obtained with the following pixel layout: 22 red pixels 82, 3 green pixels 83, and 11 blue pixels 84. Based on the same calculation, skin colour is obtained with the following pixel layout: 21 red pixels 82, 7 green pixels 83, and 8 blue pixels 84.

The reference to the resolving ability of the human eye does not mean that the produced spectral and mixed colours are not machine-readable and -analysable as well. Especially in the case of authentication features, which should generally be as small as possible, machine reading is particularly appropriate.

For a predetermined angle of incidence of the light, the grating period and the orientation of the diffraction grating within the colour pixel area determine the diffraction directions of the spectral colours and thus the viewing angle and the azimuthal viewing direction of the primary colour of the individual pixel. In this regard, the different grating periods for the individual wavelengths of the mixed colour have to be chosen and the diffraction gratings of the arrays aligned such that the diffraction angle and the diffraction direction of at least one diffraction order are the same for each wavelength of the mixed colour in order to achieve an effective colour mixture under at least one viewing angle in at least one azimuthal viewing direction.

According to Fig. 3, in blazed grating 77, α_B is the angle of inclination of the diffracting grating furrows (blaze angle) and diffraction angle α_m is the angle between grating normal GN and the diffraction direction of the intensity maximum of the diffracted monochromatic beam portion gs of the respective diffraction order z and hence indicates the viewing angle α_m and the viewing direction gS for this beam portion at a predetermined angle of incidence α_e.

Diffraction angle α_m is determined by the wavelength of the incident light, by the angle of incidence α_e, and by grating period g. The term "azimuthal viewing direction" aB of the diffracted monochromatic beam portion refers to the

direction, originating from grating normal GN, of the intersecting line of the plane spanned by the grating normal and by diffraction direction gS with grating plane GE, which is characterised by azimuth angle α_z, see also Fig. 7. In Fig. 7, sB denotes the viewing direction of the diffracted beam.

Thus, the viewing angle for the mixed colour is furthermore dependent upon the matched grating periods of the different colour pixel types, and the viewing direction is determined by the orientation of the grating structures, i.e. of grating furrows GF in the different colour pixel areas required for creating the mixed colour. The creation of a mixed colour has to be achieved within a subarea that is no longer resolvable for the human eye of at most 200 µm x 200 µm that is formed by a sufficient number of different colour pixel areas.

Multiple viewing directions can be realised if grating furrows GF within the colour pixels have multiple azimuthal orientations: If e.g. the grating structures in one half of the pixels of a primary colour contained in a subarea are arranged perpendicularly to the grating structures in the other half of the pixels, there are also two azimuthal viewing directions aB perpendicular to one another, especially upon irradiation of the grating with diffuse white light, see Fig. 8. To this end, however, half of the total number of colour pixels within the subarea must be sufficient for producing the mixed colour. In this case, however, the mixed colour will be perceived with a reduced intensity in each of the two azimuthal viewing directions.

Also, in this manner, three azimuthal viewing directions that are offset 120° from each other can be realised. According to Fig. 6, with the aid of a column grid grating

80, i.e. by columns P in the form of elevations or complementary pits of different cross-sectional shapes, e.g. circular, triangular, rectangular, hexagonal, and different dimensions, multiple azimuthal viewing directions can be realized. For example, a triangular column or pit cross-section results in three azimuthal viewing directions aB that are offset by $2/3\ \pi = 120°$.

If different pixel sizes for the primary colours are chosen, the side lengths of the larger pixels have to be an integer multiple of the side length of the smallest pixel so that the subarea can be completely filled with colour pixels in order to achieve the maximally possible mixed colour intensity. A reduction of the intensity, i.e. a darkening effect, can be achieved by inserting pixel areas into the subarea that are e.g. unstructured in the case of ta-C layer substrates or have grating structures which absorb light wavelengths or diffract in a different direction.

To control the intensity of the primary colours for the creation of the mixed colours, besides the number and the surface area of the colour pixels and the choice of the diffraction order of the pixels in the viewing direction, different diffraction grating types in the pixels of the primary colours of a subarea can be utilised since e.g. blazed gratings produce higher intensities than groove and rib gratings.

According to the invention, the diffraction grating arrays are applied to surfaces of solid bodies such as metals, metallic alloys, glasses, synthetic materials having hard surfaces, as well as ta-C layers or other hard materials such as hard metals, carbides such as tungsten carbide or boron carbide. More specifically, diffraction grating arrays can be applied to wear-resistant hard materials, e.g. to

embossing tools for embossing authentication features, colour patterns, or signs having a colour effect on packaging foils, while it is apparent that the negative of the diffraction grating structures on the embossing tool has to be designed with such a cross-sectional geometry and such dimensions of the microstructures that based on the properties of the material that is to be embossed and the embossing parameters, the embossed positive represents the optimum diffraction grating pattern for the intended diffraction-optical effect.

The first laser installation L1 with a changer device for diaphragms and masks that allows placing any desired mask and any desired diaphragm into the beam path of the excimer laser enables a large variety not only of different grating structures having different grating constants, but also a large number of possible designs of the outer contour of the grating structure areas. Thus it is possible to design the shape of the structured area elements that are composed of a plurality of subareas as squares, rectangles, triangles, parallelograms, hexagons, etc., or possibly as circles, the most diverse grating structures for creating colours and mixed colours being possible in these area elements. In certain dispositions it is also possible e.g. to create three-dimensionally appearing cube patterns composed of three parallelograms or stars having multiple rays.

Furthermore, the two laser installations allow to superpose the most diverse grating structures, e.g. first to produce a particular grating structure and area elements arranged in a pattern by means of the excimer laser, onto which ripple grating structures are applied by means of the femtosecond laser in order to create another combination of colours and mixed colours that may particularly also be used as authentication features. Also, different viewing angles can

be realised, or stepwise or continuous colour changes, or the appearance and disappearance of colour patterns or colour images upon inclination or rotation of the diffraction grating pattern by a stepwise variation of the grating periods or of the orientation of the grating furrows.

- - - - -

Claims

1. Method for creating colour patterns by means of diffraction gratings upon irradiation with light, characterised in that diffraction grating arrays are produced directly on a solid body surface in a laser microstructuring process by irradiation with at least one laser installation in the nanosecond range or in the pico- or femtosecond range, each diffraction grating array being composed of subareas whose longitudinal dimension has a value below the resolving ability of the eye and that each subarea contains at least one pixel, a pixel being a limited diffraction grating structure for producing a single spectral colour, which is diffracted by the chosen grating parameters and the angle of incidence (α_e) in determined diffraction angles (αm) in at least one determined azimuthal viewing angle (aB).

2. Method according to claim 1, characterised in that each subarea contains at least two pixels, each having a different grating constant for producing two different spectral colours in the same diffraction angle (αm) in the same azimuthal viewing angle (aB).

3. Method according to claim 2, characterised in that the pixel area and/or the number of pixels is chosen such that the different in at least one predetermined viewing direction to produce a mixed colour.

4. Method according to claim 2 or 3, characterised in that the wavelengths for the primary spectral colours red, green, and blue are selected according to the intended application, and that if the mixed colour is to be viewed by the human eye, the three colours are red, green, and blue

with a wavelength λred of 630 nm, λgreen of 530 nm, and λblue of 430 nm.

5. Method according to any one of claims 1 to 4, characterised in that the subareas have a maximum longitudinal dimension of 200 μm and the associated pixel areas a maximum longitudinal dimension of 66.67 μm.

6. Method according to any one of claims 1 to 5, characterised in that the pixels are linear or annular blazed gratings, linear or annular groove and rib gratings, or columnar gratings having a circular or polygonal cross-section.

7. Method according to claim 6, characterised in that the gratings are produced with the laser mask projection procedure by means of masks that are arranged in a mask and diaphragm rotational and changer device in the beam path of the excimer laser.

8. Method according to claim 7, characterised in that the masks are produced by means of a femtosecond laser according to the focus technique or by means of a fluor laser according to the mask projection technique, a surface of a substrate being irradiated such that the nontransparent areas are produced by roughening and modifying the surface, and the substrate being quartz glass (SiO_2), sapphire (Al_2O_3), calcium fluoride (CaF_2), or magnesium fluoride (MgF_2).

9. Method according to any one of claims 1 to 5, characterised in that the pixels comprise diffraction gratings in the form of ripples produced by a pico- or femtosecond laser.

10. Method according to claim 6 and 9, characterised in that the pixels are obtained by superposing the grating and the ripple structures.

11. Method according to any one of claims 1 to 10, characterised in that multiple subareas are juxtaposed to form signs, images, logos, or authentication features.

12. Method according to any one of claims 1 to 11, characterised in that the solid body surface is a hard material coated surface of an embossing roller or of an embossing die for embossing packaging foils, the hard material coating consisting of ta-C, tungsten carbide (WC), boron carbide (B_4C), silicon carbide (SiC) or similar hard materials.

13. Device for implementing the method according to any one of claims 1 to 12, characterised in that the first laser installation (L1) for the production of blazed gratings, groove and rib gratings or column grid gratings comprises a KrF excimer laser (1) having a wavelength of 248 nm, or an ArF excimer laser having a wavelength of 193 nm, or a fluor laser having a wavelength of 157 nm, or a XeCl excimer laser having a wavelength of 308 nm, and the second laser installation (L2) for producing the ripple structures comprises a femtosecond laser (15) having a centre wavelength of 775 nm or its frequency-doubled or -tripled wavelength, or a picosecond laser of the Nd:YAG type having a wavelength of 1064 nm or its frequency-doubled or -tripled wavelength.

14. Device according to claim 13, characterised in that between the first laser (1) and its imaging optics (8), at least one mask and diaphragm combination (18, 6) is

arranged, a number of mask and diaphragm combinations being arranged in a rotational and changer device and the changer device being adapted to place both one of the masks (18) and one of the diaphragms (6) in the beam path (29) of the laser (1) independently of each other, the masks (18) and diaphragms (6) being arranged in holders while being displaceable linearly or rotatively and rotatable about themselves.

15. Device according to claim 14, characterised in that the mask (6) is a triangular mask (78) or a stripe mask (79) for producing blazed gratings.

16. Device according to any one of claims 13 to 15, for structuring areas on an embossing roller or an embossing die for embossing diffraction-optically effective areas on a packaging foil.

17. Device according to any one of claims 13 to 15, for producing diffraction-optically effective signs or authentication features on portions of coated or uncoated watch parts, watchglasses from glass or sapphire, coins, or decorative objects.

18. Packaging foil embossed with the rollers or embossing dies structured according to claim 16, characterised in that it has diffraction-optically effective areas and/or authentication features comprising colour pixels of a spectral colour or colour pixels of different colours for creating mixed colours.

19. Packaging foil according to claim 18, characterised in that it is satinized in those locations where no diffraction-optically effective areas, authentication features, and/or logos are provided.

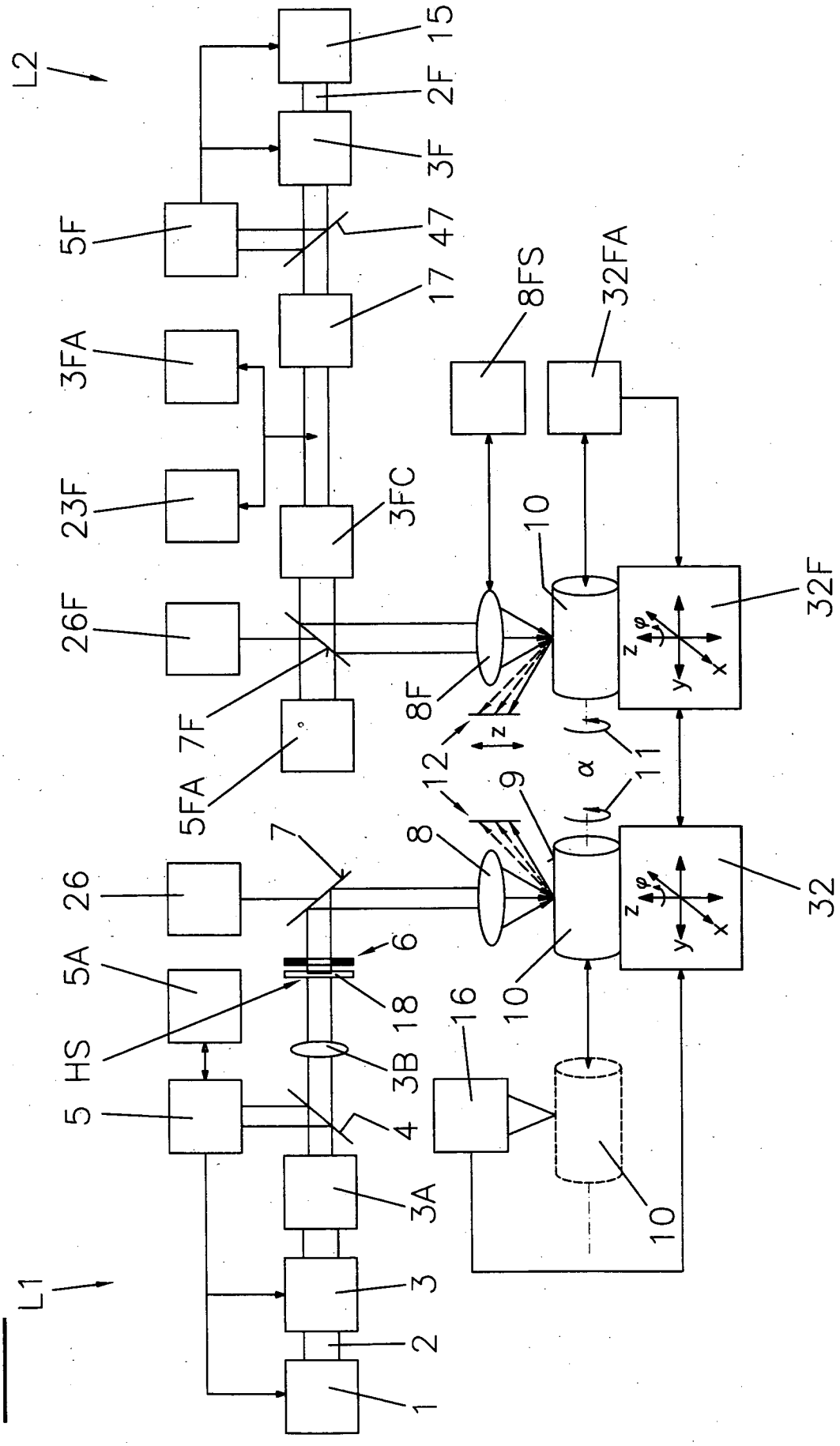
L1
L2
1
2
3
3A
3B
4
5
5A
5F
5FA
6
7
7F
8
8F
8FS
9
10
11
12
15
16
17
18
23F
26
26F
2F
3F
3FA
3FC
32
32F
32FA
47
HS
α
z
x
y
φ

FIG. 1

FIG. 2

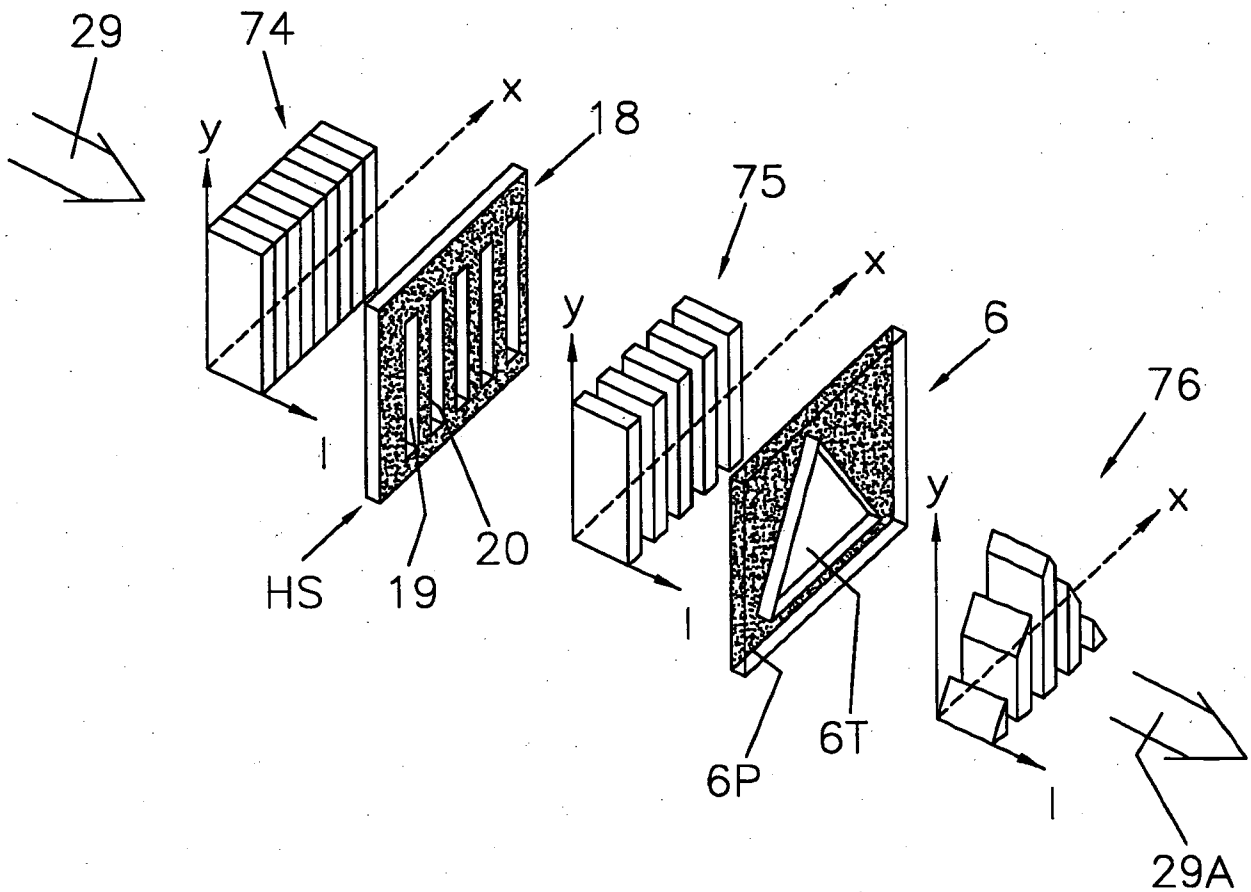
29
74
x
y
18
75
x
y
6
76
y
x
l
HS
19
20
l
6P
6T
l
29A

FIG. 3

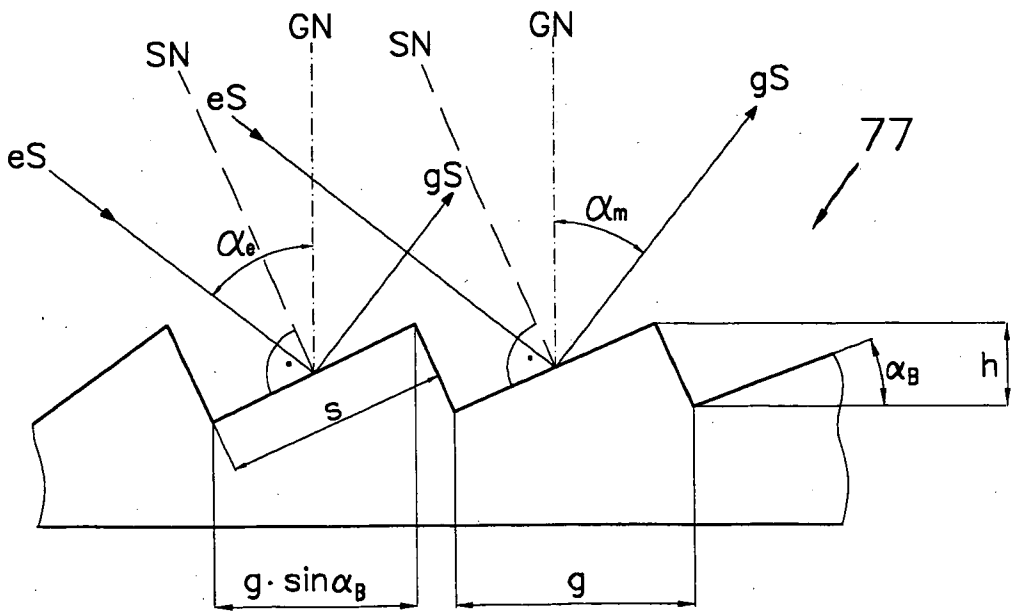
SN
GN
SN
GN
gS
77
eS
eS
gS
α_e
α_m
α_B
h
s
$g \cdot \sin\alpha_B$
g

FIG. 4

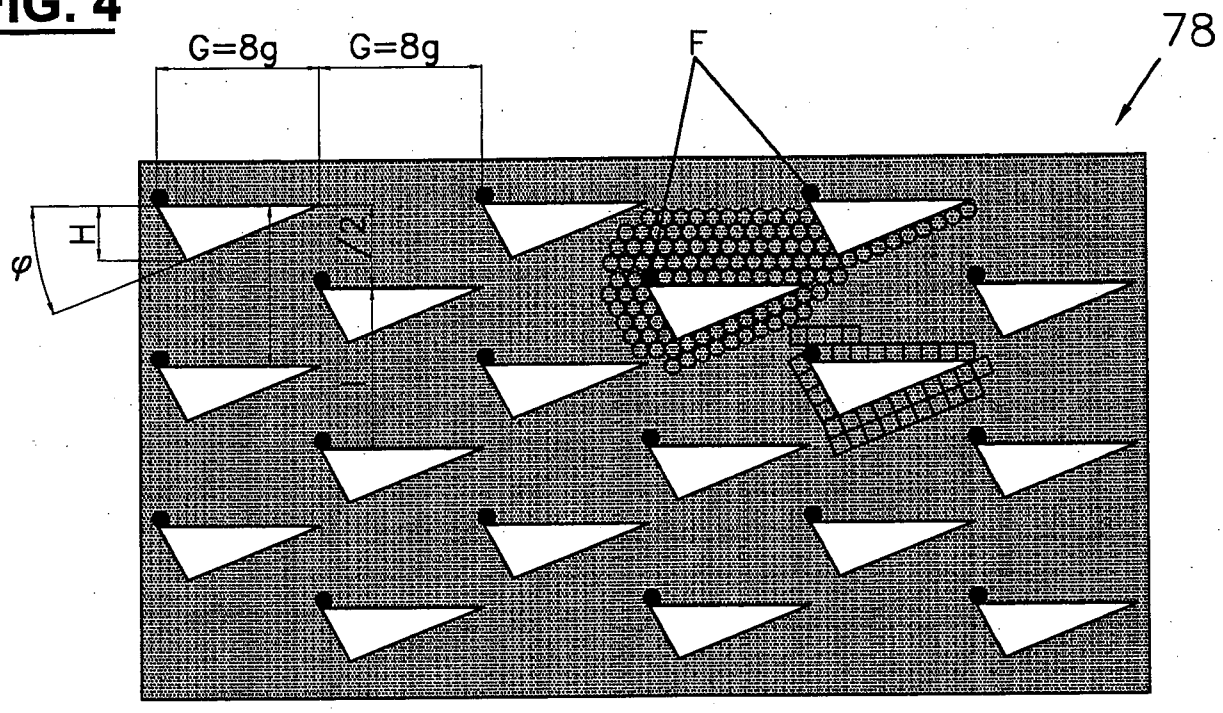

FIG. 5

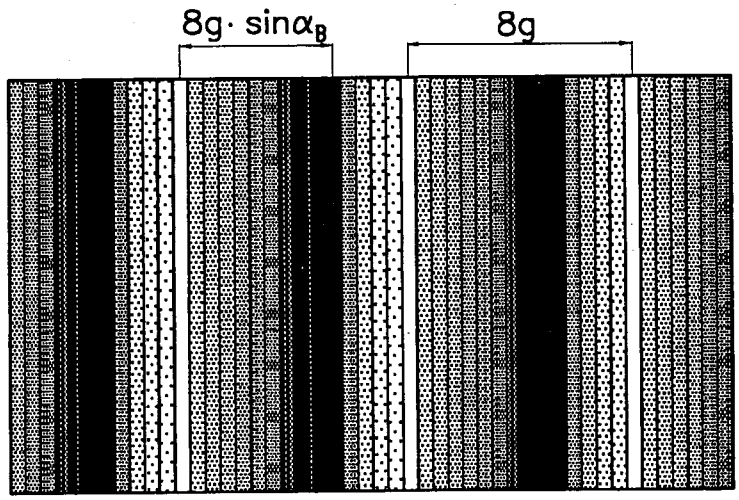

FIG. 6

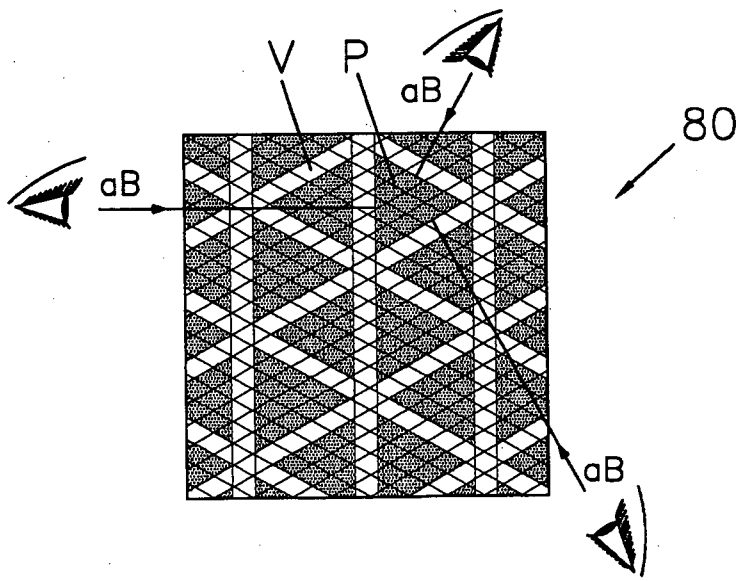

FIG. 7

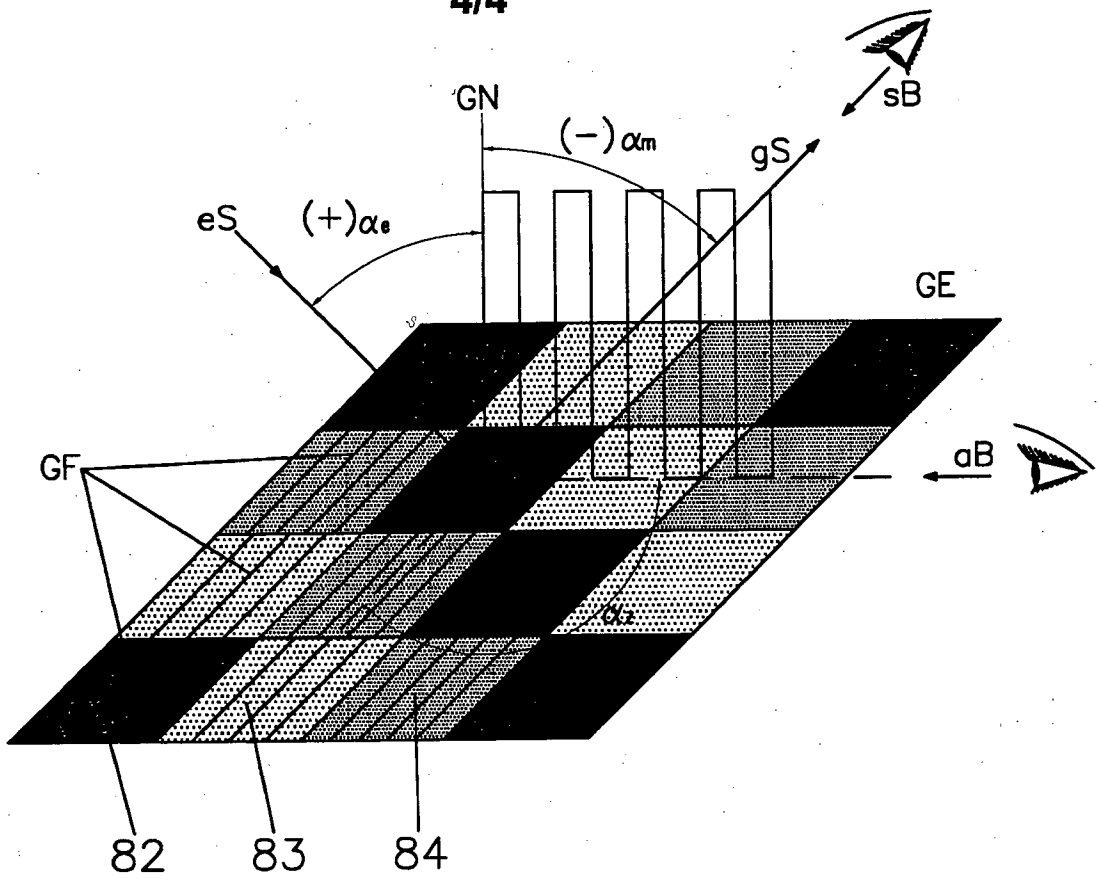

FIG. 8

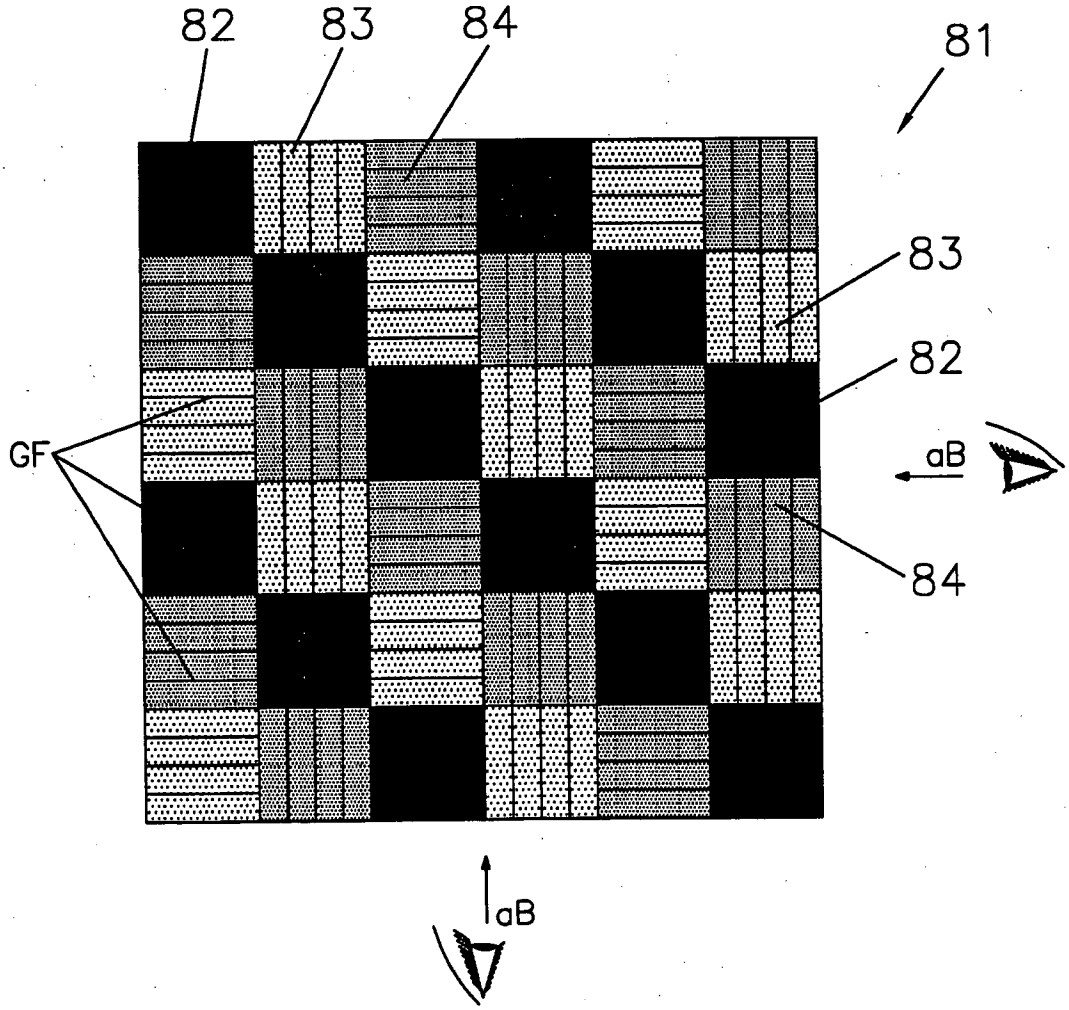

INTERNATIONAL SEARCH REPORT

International application No
PCT/CH2010/000294

A. CLASSIFICATION OF SUBJECT MATTER
INV. G02B5/18
ADD.

According to International Patent Classification (IPC) or to both national classification and IPC

B. FIELDS SEARCHED

Minimum documentation searched (classification system followed by classification symbols)
G02B

Documentation searched other than minimum documentation to the extent that such documents are included in the fields searched

Electronic data base consulted during the international search (name of data base and, where practical, search terms used)
EPO-Internal

C. DOCUMENTS CONSIDERED TO BE RELEVANT

Category*	Citation of document, with indication, where appropriate, of the relevant passages	Relevant to claim No.
X A	US 2006/018021 A1 (TOMKINS DONALD W [US] ET AL) 26 January 2006 (2006-01-26) the whole document -----	1,6,7, 11,12 13,18
A	WO 02/06858 A2 (OPTAGLIO LTD [GB]; DRINKWATER JOHN [GB]) 24 January 2002 (2002-01-24) page 9 - page 11 the whole document -----	1-19
A	WO 00/61511 A1 (UNIV NEW MEXICO [US]) 19 October 2000 (2000-10-19) the whole document -----	1-19

☐ Further documents are listed in the continuation of Box C.

☒ See patent family annex.

* Special categories of cited documents :

"A" document defining the general state of the art which is not considered to be of particular relevance

"E" earlier document but published on or after the international filing date

"L" document which may throw doubts on priority claim(s) or which is cited to establish the publication date of another citation or other special reason (as specified)

"O" document referring to an oral disclosure, use, exhibition or other means

"P" document published prior to the international filing date but later than the priority date claimed

"T" later document published after the international filing date or priority date and not in conflict with the application but cited to understand the principle or theory underlying the invention

"X" document of particular relevance; the claimed invention cannot be considered novel or cannot be considered to involve an inventive step when the document is taken alone

"Y" document of particular relevance; the claimed invention cannot be considered to involve an inventive step when the document is combined with one or more other such documents, such combination being obvious to a person skilled in the art.

"&" document member of the same patent family

Date of the actual completion of the international search	Date of mailing of the international search report
12 April 2011	19/04/2011

Name and mailing address of the ISA/	Authorized officer
European Patent Office, P.B. 5818 Patentlaan 2 NL - 2280 HV Rijswijk Tel. (+31-70) 340-2040, Fax: (+31-70) 340-3016	Andreassen, Jon

1

INTERNATIONAL SEARCH REPORT

Information on patent family members

International application No
PCT/CH2010/000294

Patent document cited in search report	Publication date	Patent family member(s)	Publication date
US 2006018021 A1	26-01-2006	NONE	
WO 0206858 A2	24-01-2002	AT 338292 T	15-09-2006
		AU 7083301 A	30-01-2002
		DE 60122735 T2	20-09-2007
		EP 1303795 A2	23-04-2003
		EP 1804091 A2	04-07-2007
		US 2005270604 A1	08-12-2005
		US 2004032659 A1	19-02-2004
WO 0061511 A1	19-10-2000	AU 4204900 A	14-11-2000
		CA 2369584 A1	19-10-2000
		EP 1183214 A1	06-03-2002