(12) INTERNATIONAL APPLICATION PUBLISHED UNDER THE PATENT COOPERATION TREATY (PCT)

(19) World Intellectual Property Organization
International Bureau

(43) International Publication Date
29 December 2004 (29.12.2004)

PCT

(10) International Publication Number
WO 2004/113800 A3

(51) International Patent Classification[7]: F24H 1/20

(21) International Application Number:
PCT/KR2004/001471

(22) International Filing Date: 19 June 2004 (19.06.2004)

(25) Filing Language: Korean

(26) Publication Language: English

(30) Priority Data:
10-2003-0040227 20 June 2003 (20.06.2003) KR

(71) Applicant and
(72) Inventor: **PARK, Sung-don** [KR/KR]; 109-801, Baeng-mamaelu Samsung Apt., 755, Madu 1-Dong, Ilsan-Gu, Goyang-Si, gyeonggi-Do 411-351 (KR).

(74) Agent: **HWANG, Eui-Chang**; Vniel B/D 2F., 1362-9, Seocho-Dong, Seocho-Gu, Seoul 137-070 (KR).

(81) Designated States *(unless otherwise indicated, for every kind of national protection available)*: AE, AG, AL, AM, AT, AU, AZ, BA, BB, BG, BR, BW, BY, BZ, CA, CH, CN, CO, CR, CU, CZ, DE, DK, DM, DZ, EC, EE, EG, ES, FI, GB, GD, GE, GH, GM, HR, HU, ID, IL, IN, IS, JP, KE, KG, KP, KZ, LC, LK, LR, LS, LT, LU, LV, MA, MD, MG, MK, MN, MW, MX, MZ, NA, NI, NO, NZ, OM, PG, PH, PL, PT, RO, RU, SC, SD, SE, SG, SK, SL, SY, TJ, TM, TN, TR, TT, TZ, UA, UG, US, UZ, VC, VN, YU, ZA, ZM, ZW.

(84) Designated States *(unless otherwise indicated, for every kind of regional protection available)*: ARIPO (BW, GH, GM, KE, LS, MW, MZ, NA, SD, SL, SZ, TZ, UG, ZM, ZW), Eurasian (AM, AZ, BY, KG, KZ, MD, RU, TJ, TM), European (AT, BE, BG, CH, CY, CZ, DE, DK, EE, ES, FI, FR, GB, GR, HU, IE, IT, LU, MC, NL, PL, PT, RO, SE, SI,

[Continued on next page]

(54) **Title:** ELECTRIC BOILER WITH A MEMBRANE HEATER

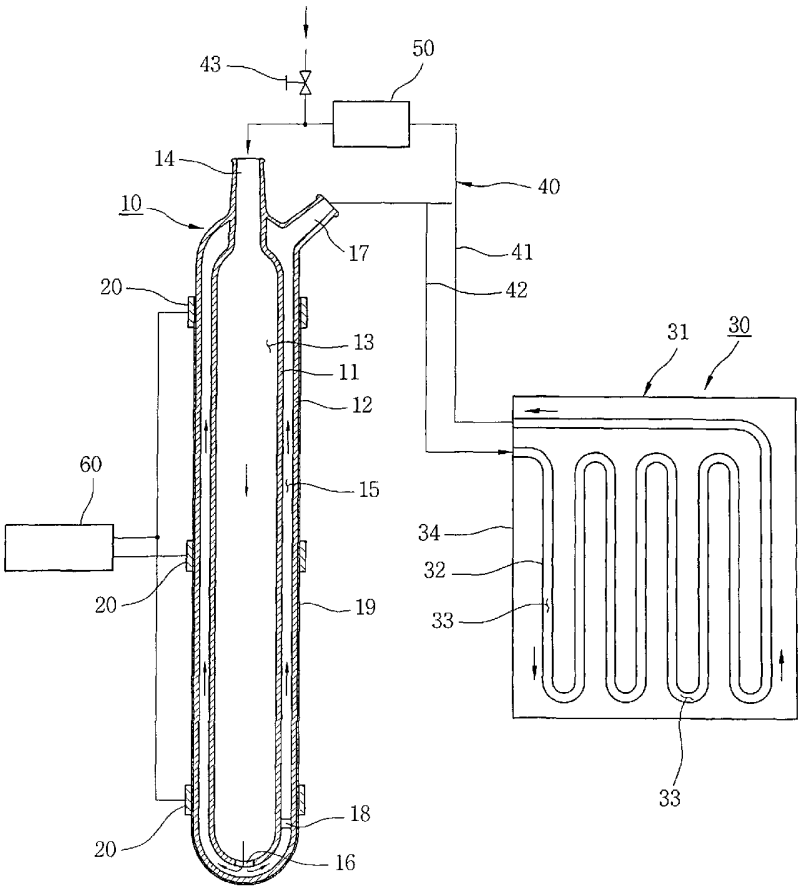

(57) **Abstract:** An electric boiler is provided, which comprises: a heating device including an inner tube having a fluid inlet port and a first fluid passageway, an outer tube enclosing the inner tube and having a fluid outlet port and a second fluid passageway in communication with the first fluid passageway, and a membrane heater for converting electric energy into thermal energy to heat up fluid in the second fluid passageway, the membrane heater comprised of electrically conductive paint coated on an external surface of the outer tube; a radiator device for allowing fluid-borne thermal energy to be dissipated to the outside, the radiator device including a radiant pipe connected at one end to the inlet port of the inner tube and at the other end to the outlet port of the outer tube; and a pump for forcibly circulating the fluid through the heating device and the radiator device.

WO 2004/113800 A3

SK, TR), OAPI (BF, BJ, CF, CG, CI, CM, GA, GN, GQ, GW, ML, MR, NE, SN, TD, TG).

Published:
— *with international search report*

(88) Date of publication of the international search report:
17 February 2005

For two-letter codes and other abbreviations, refer to the "Guidance Notes on Codes and Abbreviations" appearing at the beginning of each regular issue of the PCT Gazette.

INTERNATIONAL SEARCH REPORT

International application No.
PCT/KR2004/001471

A. CLASSIFICATION OF SUBJECT MATTER

IPC7 F24H 1/20

According to International Patent Classification (IPC) or to both national classification and IPC

B. FIELDS SEARCHED

Minimum documentation searched (classification system followed by classification symbols)
IPC7 F24H, G01F, G01K, G01P

Documentation searched other than minimum documentation to the extent that such documents are included in the fields searched
KR, JP:IPC as above

Electronic data base consulted during the intertnational search (name of data base and, where practicable, search terms used)

C. DOCUMENTS CONSIDERED TO BE RELEVANT

Category*	Citation of document, with indication, where appropriate, of the relevant passages	Relevant to claim No.
A	JP 2000-275077 A (OMRON CO., LTD.) 06 OCTOBER 2000 See the whole document	1-7
A	JP 2003-98012 A (KIMURA MITSUTERU) 03 APRIL 2003 See the whole document	1-7
A	KR 2001-0076673 A (CHO, JUNG HUY; KWON, OH MAN) 16 AUGUST 2001 See the whole document	1-7
A	KR 1995-0011684 B1 (MANDO MACHINERY CO., LTD.) 07 OCTOBER 1995 See the whole document	1-7

☐ Further documents are listed in the continuation of Box C. ☐ See patent family annex.

* Special categories of cited documents:
"A" document defining the general state of the art which is not considered to be of particular relevance
"E" earlier application or patent but published on or after the international filing date
"L" document which may throw doubts on priority claim(s) or which is cited to establish the publication date of citation or other special reason (as specified)
"O" document referring to an oral disclosure, use, exhibition or other means
"P" document published prior to the international filing date but later than the priority date claimed
"T" later document published after the international filing date or priority date and not in conflict with the application but cited to understand the principle or theory underlying the invention
"X" document of particular relevance; the claimed invention cannot be considered novel or cannot be considered to involve an inventive step when the document is taken alone
"Y" document of particular relevance; the claimed invention cannot be considered to involve an inventive step when the document is combined with one or more other such documents,such combination being obvious to a person skilled in the art
"&" document member of the same patent family

Date of the actual completion of the international search	Date of mailing of the international search report
16 NOVEMBER 2004 (16.11.2004)	**17 NOVEMBER 2004 (17.11.2004)**
Name and mailing address of the ISA/KR Korean Intellectual Property Office 920 Dunsan-dong, Seo-gu, Daejeon 302-701, Republic of Korea Facsimile No. 82-42-472-7140	Authorized officer LEE, Ik Sang Telephone No. 82-42-481-5419

Form PCT/ISA/210 (second sheet) (January 2004)