July 12, 1955 A. MATHISEN 2,712,881

STOPPERING AND OPENING DEVICES FOR FLUID CONTAINERS

Filed May 23, 1951 4 Sheets-Sheet 1

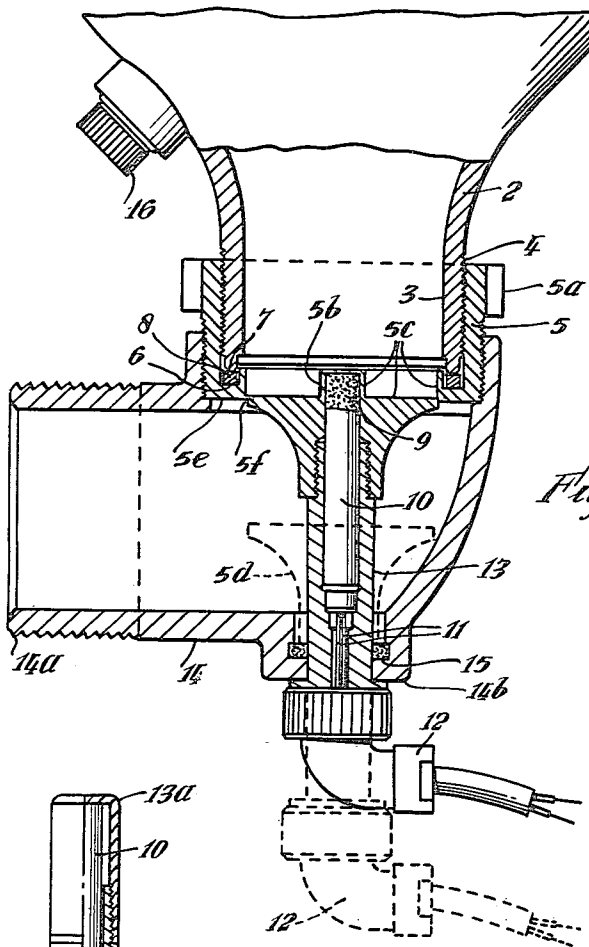

Fig.1.

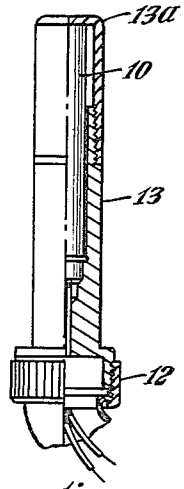

Fig.1a.

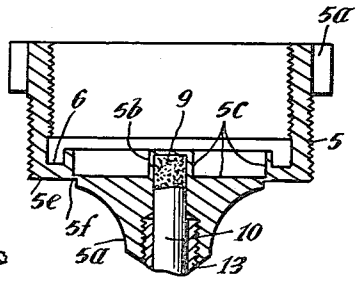

Fig.1b.

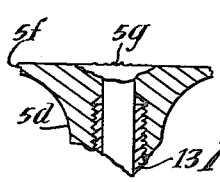

Fig.1c.

INVENTOR
Anders Mathisen
by Ben. J. Chromy
his attorney

STOPPERING AND OPENING DEVICES FOR FLUID CONTAINERS

Filed May 23, 1951 4 Sheets-Sheet 2

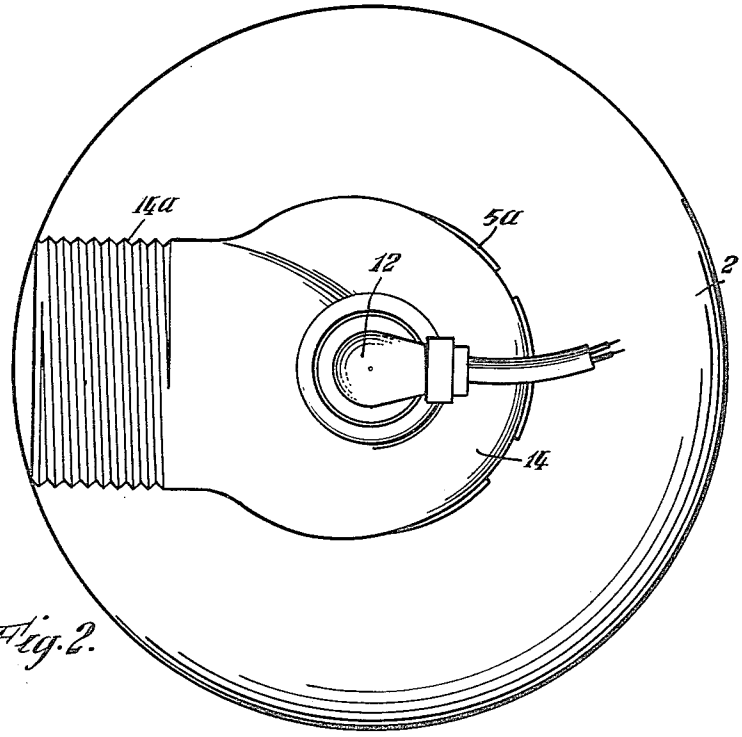

Fig. 2.

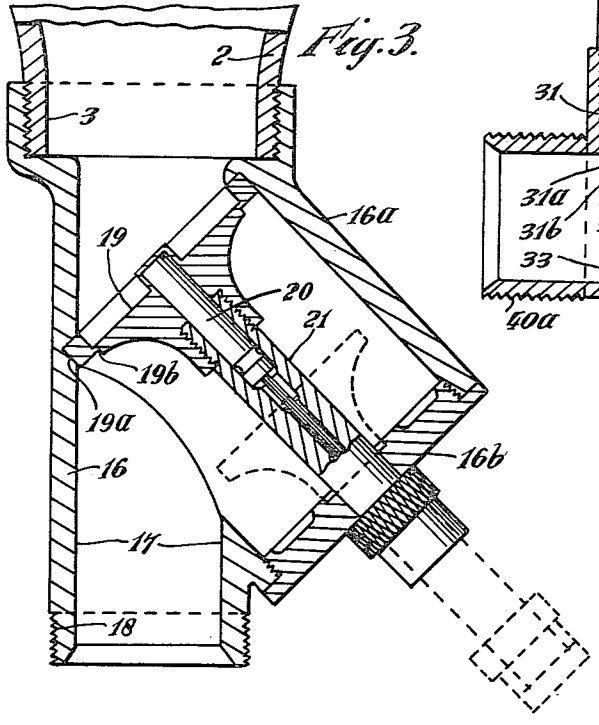

Fig. 3.

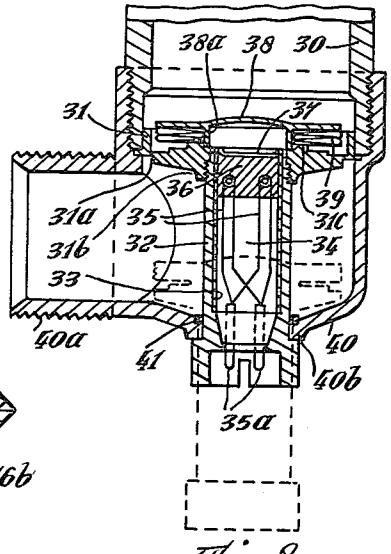

Fig. 8.

INVENTOR
Anders Mathisen
by Ben J. Chromy
his attorney

July 12, 1955 A. MATHISEN 2,712,881

STOPPERING AND OPENING DEVICES FOR FLUID CONTAINERS

Filed May 23, 1951 4 Sheets-Sheet 3

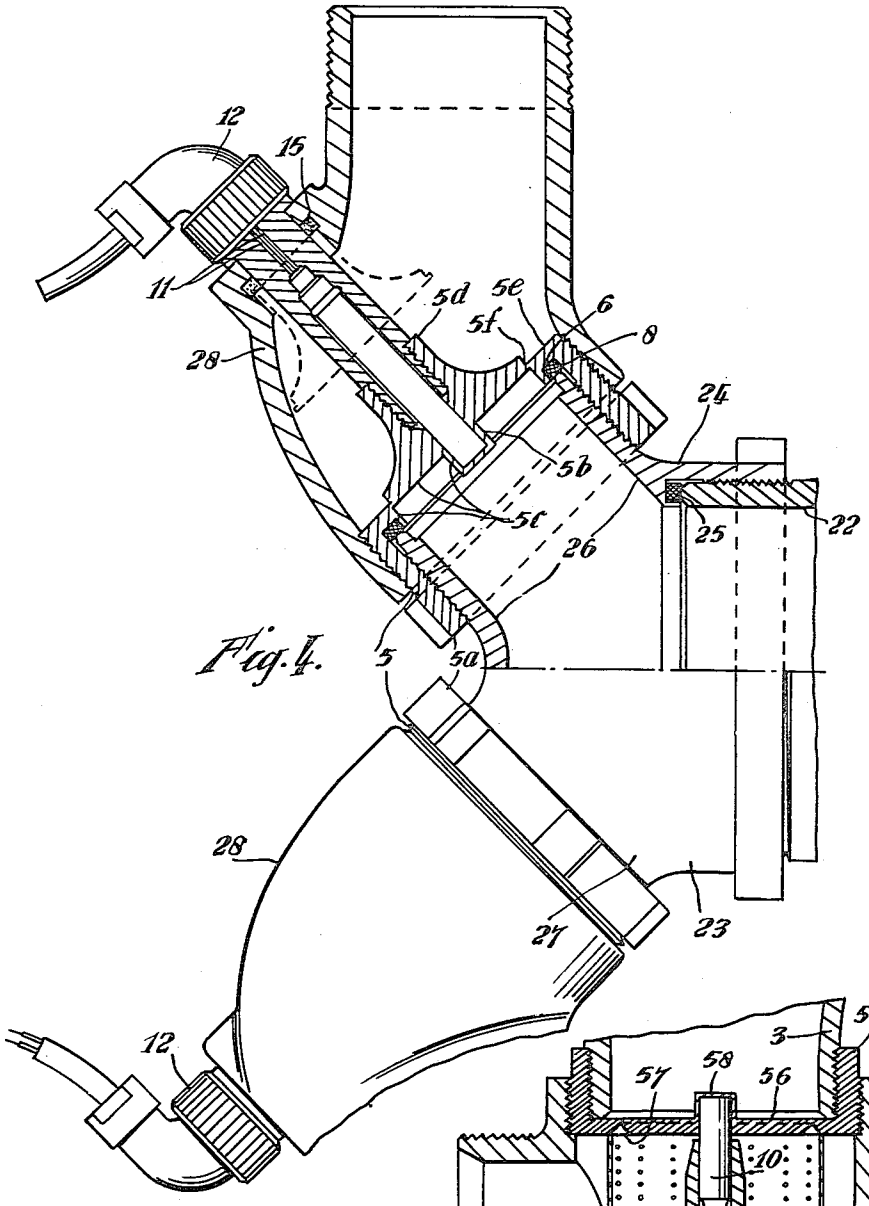

Fig. 4.

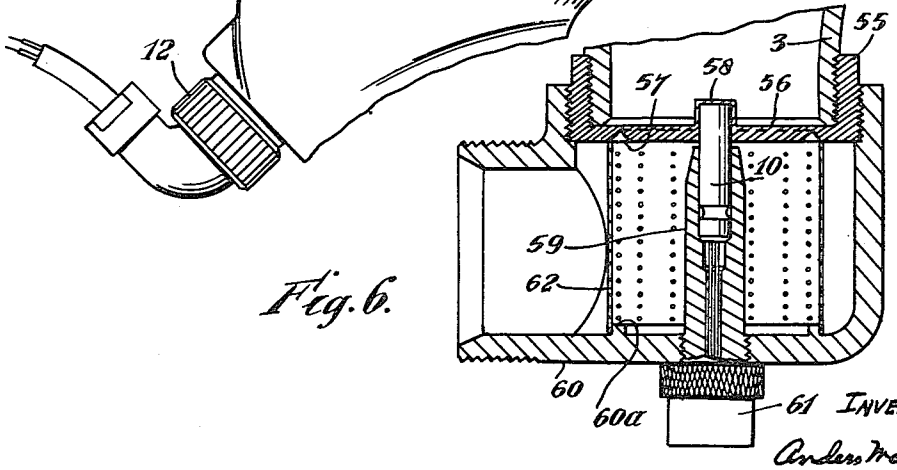

Fig. 6.

INVENTOR
Anders Mathisen
by Benj. J. Chroney
his attorney

July 12, 1955 A. MATHISEN 2,712,881

STOPPERING AND OPENING DEVICES FOR FLUID CONTAINERS

Filed May 23, 1951 4 Sheets-Sheet 4

Fig. 5.

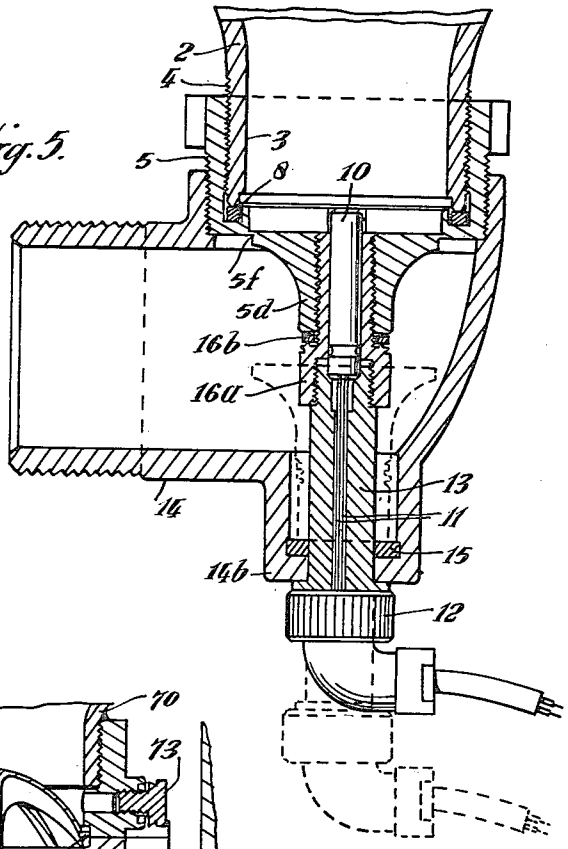

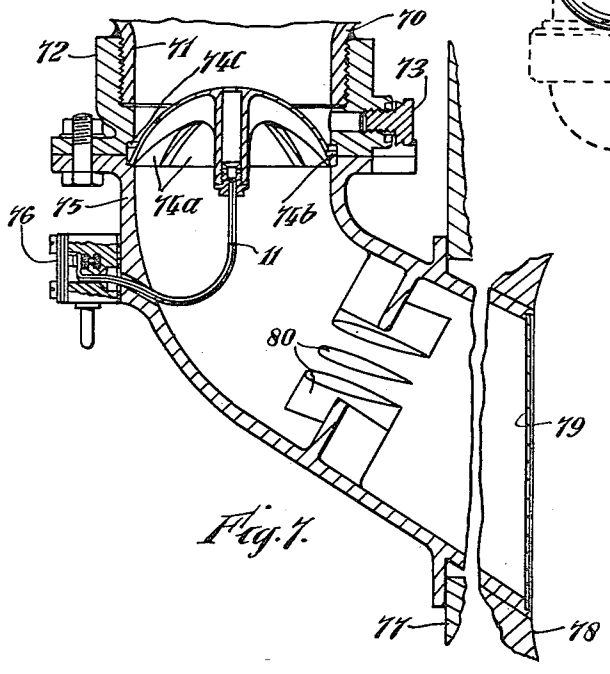

Fig. 7.

INVENTOR
Anders Mathisen
by Ben. J. Chromy
his attorney

United States Patent Office 2,712,881
Patented July 12, 1955

2,712,881

STOPPERING AND OPENING DEVICES FOR FLUID CONTAINERS

Anders Mathisen, St. James's, London, England, assignor of one-half to Graviner Manufacturing Company Limited, London, England, a British company, and one-half to The Wilkinson Sword Company Limited, London, England, a British company

Application May 23, 1951, Serial No. 227,839

25 Claims. (Cl. 220—47)

This invention relates to improvements in stoppering and opening devices for fluid containers and more particularly to frangible stoppering and opening devices for fire extinguisher fluid containers and the like.

Frangible diaphragm or disc type of stoppering and opening devices are known, and in one particular form a stem integral with a head portion of a fluid container is arranged to be severed by an explosive charge to effect discharge of fire extinguishing liquid or other fluids from the container.

In this construction the explosive charge is enclosed in a circular groove around the stem and is confined by a nut secured upon the stem. The blown out stoppering device forms an obstruction to the discharge of the fluid which is an objection when extremely rapid discharge is required under high pressure and through short outlet pipes or ducts.

In accordance with the present invention a stoppering and opening device for fluid containers comprises a frangible diaphragm extending across the discharge outlet from the container and an explosive charge associated therewith the arrangement being such that when the explosive charge is exploded, the force of the explosion acts against the diaphragm and against the pressure of the fluid in the container, and severs the diaphragm.

In the preferred form the explosive charge is of the kind known as detonators, the explosive effect of which is of extreme rapidity and of great force but of short range.

In one construction the container may be in the form of a metal bottle capable of withstanding a high internal pressure, the bottle outlet or neck being of about one to two or more inches internal diameter. A metal cap device may be fitted over said bottle neck in the centre of which a detonator is fitted in a suitably shaped holder. The detonator explosive charge is in the end of the metal casing of the detonator, said end projecting into a hood or hollow projection which projects into the fluid or liquid space in the bottle.

The metal cap device is recessed at the rim so that the metal thickness is somewhat in excess of the thickness necessary to resist safely the pressure in the bottle so that on firing the detonator the extremely rapid and localised explosion will sever the recessed rim permitting the centre of the cap to be blown back to effect discharge of the bottle content at the full bore of the bottle neck.

Alternatively, however, the explosive charge may be gunpowder or gun cotton or similar substance a given quantity of which explodes with less rapidity and force than in the case of detonators, but which has a greater explosive range than detonators.

In this alternative construction the charge is confined in a plug which is capable of being screwed or otherwise secured to the frangible disc or diaphragm, the explosive effect being applied in the container space as in the case of the detonators. In the case that gunpowder is used the space in which the explosion takes place must be dry, and a cap or like device is fitted over the end of the plug,

said cap being connected to the disc by a metal bellows or similar device which permits of lifting the cap without liquid coming into contact with the burning gunpowder which would quench the powder. On the other hand detonators are not quenched when exploded in liquid.

As the liquid pressure is exerted on the cap the disc will blow back and the parts slide back to open the outlet full bore as in the above described construction.

Various additional features of novelty will appear from the following description with reference to the accompany drawings, which show embodiments of the invention by way of example and in which:

Figure 1 shows a fire extinguisher liquid container head in section;

Figure 1*a* shows a detonator mounted in a holder as a detached unit;

Figure 1*b* shows a detached frangible cap device which forms part of the container head;

Figure 1*c* shows the frangible portion of the cap after explosion of the detonator;

Figure 2 is an end view of the container head shown in Figure 1;

Figure 3 shows a modified construction;

Figure 4 shows a container having an enlarged outlet neck as compared with Figure 1, said neck being fitted with two discharge heads;

Figure 5 shows a slight modification of the construction shown in Figure 1;

Figure 6 shows a still further modification of the construction shown in Figure 1,

Figure 7 shows an alternative construction to that of Figure 1 in which a different type of frangible diaphragm is employed, and

Figure 8 shows a modified construction in which gunpowder or like explosive is used.

Referring now to Figure 1 of the drawing numeral **2** denotes a fluid container which may be of bottle shape or of any other configuration, a neck or outlet portion denoted **3** being formed therein. The neck portion **3** is provided with a screw thread **4** to which a container stoppering device of cap shape, denoted **5**, is secured by screwing on to thread **4**.

The stoppering device or cap **5** is machined internally to form a groove **6** into which the valve face seating **7**, on the rim of neck portion **3** fits, to compress a soft metal or like sealing washer **8**. Cap **5** may be provided with spanner lugs or dogs *5a* whereby cap **5** can be tightly secured to neck **3**, to form a fluid tight seal at washer **8**, additional sealing being provided by solder tinning the thread **4** and the engaging thread on cap **5** or by red leading this thread or otherwise sealing the threads in fluid tight manner.

Cap **5** is further machined internally to form a hood or hollow projection *5b* which forms an explosive substance containing diaphragm portion. A recess *5c*, the outer diameter of which is substantially of the same dimensions as the internal diameter of the bottle neck **3** being also formed as shown so that hood *5b* projects into the fluid space in the container.

Stoppering device or cap **5** is further machined externally to form a conical boss *5d* which at its base is integral with the above described portions of cap **5**, the base being machined at *5e* to form a frangible diaphragm having a reduced section rim *5f* which may be of a thickness from .020 inch up to 0.060 inch, the diameter being substantially the same as that of bottle neck **3**.

The explosive charge which severs the diaphragm at rim *5f* is shown at **9** being contained in a solid drawn thin metal cartridge case **10** this charge being ignited electrically over a pair of ignition wires **11** connected to a standard known type of electric plug-in-socket **12**,

this device 9, 10 and 11 constituting what is known as a detonator.

The explosive charge 9 is in the end of the cartridge case 10 housed within the hood 5*b* and about two thirds of this is above the base of recess 5*c* the other third being below this base.

The detonator 10 is fitted in a holder 13 to which connector 12 is secured and as shown in Figure 1*a* the holder and detonator is detachable from cap portion 5*d* by screwing or otherwise and when fitted with a protective cap 13*a* may be stored separately from the container, being only inserted when the container is mounted for use, for example upon an aircraft.

Cap 5 is screw threaded externally and a junction box or fitting device 14 is screwed thereto, this being provided with a threaded boss 14*a* to which fluid distributing or discharge piping may be connected.

Fitting 14 is provided with a boss 14*b* internally machined to take a resilient washer 15. Container 2 may be provided with a filling and charging plug 16 of known kind through which the fire extinguishing or other fluid is filled, generally under gas pressure.

Normally, for use, the container 2 is mounted head downwards as shown in Figure 1 so that the liquid under gas pressure rests on cap portion 5*b* and 5*c*.

When it is desired to discharge the container, detonator 10 is ignited over electric leads 11 causing explosion of substance 9. The substance explodes with extreme rapidity and great force, but the range of reaction is short for detonators of the size known as No. 3.

The range of reaction is probably of the size of a golf ball and owing to the position of the substance 9 a crater is formed in recess 5*c*, as shown on 5*g* in Figure 1*c*, the part 5*d* including holder 13 and connector 12, being blown backwards to the position shown in dotted lines in Figure 1, cap 5 being severed at rim 5*f* thereby providing a full bore discharge orifice for bottle neck 3 through boss 14*a*.

Resilient ring 15 cushions the blow caused by part 5*d* landing on boss 14*b* to avoid risk of fracture, the fitting 14 therefor constituting an abutment for the boss 5*d* and holder 13 when the detonator is fired.

Owing to the rapidity of explosion of substance 9 liquid resting upon parts 5*b* and 5*c* resists displacement thereby ensuring severance of cap 5 at rims 5*f*. In actual practice, however, cap 5 severs at rim 5*f* even if the cap is detached when fired as shown in Figure 1*b*.

Hood 5*b* and the metal torn out of part 5*d* at crater 5*g* disintegrates into fine particles which may be collected by a strainer (described hereafter in connection with Figure 6) but normally this is not necessary unless the piping from boss 14*a* discharges into aero engines or power plants.

To prevent constriction in junction box 14 this is shaped as shown in Figure 2 to afford a full bore orifice past part 5*d* in the position shown in dotted lines in Figure 1.

In some types of fire extinguishers a straight through discharge of liquid is required and this may be achieved as shown in Figure 3. In this container neck 3 has fitting 16 secured thereto by means of a soldered thread, said fitting having a straight bore or duct 17 terminating in pipe union fitting threads at 18, an angular boss 16*a* being formed therein, this being machined internally to provide a seating extending angularly across duct 17 for a frangible sealing disc or diaphragm 19 which comprises a flange 19*a* soldered to said seating and having a thin material rim 19*b* formed therein which is severed when detonator 20 is ignited, causing the centre portion of diaphragm 19 to be blown back to the position shown in dotted lines, thereby forming a substantially straight through outlet duct.

Detonator 20 is mounted in holder 21 and a flanged disc 16*b* closes the end of boss 16*a* and forms an abutment from the severed part of diaphragm 19 the construction being otherwise similar to Figure 1.

Figure 4 shows a modification of the container shown in Figure 1. In Figure 4 the container neck 22 is of twice the sectional area of that of container neck 3 and is provided with a Y-shaped fitting 23 which has an inlet boss 24 secured by a soldered screw thread to neck 22 and a sealing ring 25 if desired, two outlet bosses 26 and 27 being provided thereon as shown each being fitted with a frangible stoppering device 5 and other parts identical to those of Figure 1, except that the junction box fitting 28 is shaped as shown to obtain liquid outlet piping and fittings substantially at right angles to the vertical centre line of container neck 22. The container in practice is vertically mounted and not horizontal as shown in Figure 4.

By this means selective discharge from either one of the two outlets can be obtained, or simultaneous discharge from both outlets. More than two outlets may be provided in this manner by suitably redesigning the container neck and the fitting 23.

Referring to Figure 5 the construction is similar to Figure 1 except that boss 5*d* is enlarged and bored out to take a charging plug 16*a* of known construction but machined to take detonator 10 and holder 13, a sealing washer 16*b* being clamped between parts 16*a* and 5*d* upon preformed sealing surfaces so that a liquid tight seal can be made.

Boss 14*b* is slightly modified to permit plug 16*a* to move into it so that the severed diaphragm portion will occupy in the construction shown in Figure 5 the same position as in Figure 1.

By this means charging plug 16 on the bottle neck (Fig. 1) is not necessary in the construction shown in Fig. 5, filling and gassing being effected through boss 5*d*, the rim 5*f* being of sufficient strength to withstand the securing of plug 16*a*.

In the modified construction shown in Fig. 6, the bottle neck 3 is fitted with a cup shaped device 55 having a disc portion 56 provided with circular and radial V-shaped grooves 57, a hood 58 being produced either by machining or soldering, into which hood the end of detonator 10 projects.

Detonator 10 is mounted in a holder 59 secured by screwing or otherwise in junction box device 60, a known form of electrical connector 61 being secured thereto.

Upon ignition of detonator 10 the diaphragm 56 is shattered into a number of pieces, these being trapped by a strainer device 62 secured by a rim 60*a* formed in the base of fitting 60, the holder 59 in this case remaining in position.

Figure 7 shows a large bore container 70 having a neck 71 of about three to five inches diameter. To this a flanged neck fitting 72 is secured and soldered or brazed, this being provided with a known form of charging plug 73.

A plastic material or cast metal diaphragm 74 provided with strengthening ribs 74*a* and a circular rim or flange 74*b* is clamped between fitting 72 and an outlet duct or junction box fitting 75 by means of a compression ring 74*c*, the diaphragm also being made so as to retain detonator 10 in the position shown, so that upon ignition diaphragm 74 will shatter into fragments permitting discharge of the container contents.

Diaphragm 74 is shown of hemispherical shape, this shape providing a fragile construction, whilst still being capable of resisting the high hydraulic pressure of the container contents.

Detonator 10 is connected by leads 11 to an electrical plug-in-socket 76 to which an ignition current supply source may be connected.

The container may be of considerable capacity and fitting 75 is shown suitable for mounting on a wall or casing 77 extending into a fire risk zone such as a ship's hold or petrol tank, or into an inflammable gas duct 78, a thin

plate 79 being secured in the end of fitting 75 to prevent entry of substances from duct 78 into fitting 75, which plate 79 is blown out upon discharge of the container.

To impart a twist to the liquid stream or jet from container 70, vanes 80 may be provided in the fitting 75, these vanes being disposed at an angle similarly to impellor blades, the twist imparted to the high velocity liquid stream or jet causing this to spread out and form mist or fog of large volume.

Referring now to Figure 8, the container neck 30 has a frangible diaphragm 31 soldered thereto, a thin metal rim 31*a* being formed therein as shown. The diaphragm 31 is formed with a centre boss 31*b* which is bored through and has a holder device 32 screwed into the bore, said device 32 being fitted with an insulating sleeve 33 into which is fitted an insulating block 34 split into halves to support and embrace electric fuse wire leads 35 and the ends of connector pins 35*a*, said block and sleeve forming an enclosure for explosive substance 36 retained in said enclosure by disc 37. Substance 36 may be gunpowder or gun cotton or similar substance, but its explosive effect is not so rapid as that of detonators and for this reason a flanged cap 38 is placed over the end of holder 32, and has one end convolution of a metal bellows device 39 soldered thereto, the other end convolution being soldered to a rim 31*c* of diaphragm 31.

Cap 38 has a rim 38*a* resting within rim 31*c*, thus forming an explosion chamber for substance 36 projecting into the container fluid space.

When substance 36 is ignited by fuse wires connected to leads 35 the slow acting explosion will lift the cap 38 against the liquid pressure, the resulting reaction causing severance of rim 31*a* whereby diaphragm part 31*b*, holder 32, cap 38 and associated parts slide back into the position shown in dotted lines in Figure 8, this permitting discharge of the container through junction box device 40 which is screwed on to bottle neck 30 and has a pipe union boss 40*a* provided thereon. A sealing ring 41 prevents loss of liquid round holder 32 in boss 40*b* of device 40, this constituting an abutment for part 31*b* and holder 32.

Gunpowder and similar substance will be quenched if exploded into liquid and the bellows device 39 permits displacement of cap 38 without allowing the explosive flame to contact the quenching liquid.

Substance 9 in detonators, on the other hand, is not quenched by liquids when ignited and the greatly simplified construction therefore becomes possible when using detonators.

The construction shown in Figure 8 is, however, a practical alternative if detonators cannot be used for any reason, but diaphragm rim 31*a* requires careful machining as its strength must not greatly exceed that necessary to resist safely the pressure of the liquid in the container. Diaphragms fitted with detonators, on the other hand, may have a substantial margin of safety as the force available will ensure severance with any reasonable design.

What I claim is:

1. A stoppering and opening device for a fluid container provided with at least one discharge outlet, comprising a cover member extending substantially across such discharge outlet, said cover member having an outer portion and an inner portion coaxially disposed relative to said outer portion and hermetically connected to said outer portion by a frangible portion, said inner portion having a recess the base of which is formed by a frangible portion normally isolating said recess from the fluid bearing against the cover member, said last-mentioned frangible portion projecting into such fluid, and an explosive charge positioned within said recess and adjacent to said last-mentioned frangible portion so as to produce upon ignition an explosive force which acts against the fluid and against said inner portion to sever said first-mentioned frangible portion.

2. A stoppering and opening device according to claim 1 for a container provided with a plurality of discharge outlets, wherein a cover member is provided to extend respectively across each outlet and an explosive charge is positioned within the recessed inner portion of each cover member to sever upon ignition the frangible portion connecting the inner and outer portions thereof.

3. A stoppering and opening device according to claim 1 wherein said explosive charge is a detonator, said inner portion including a boss having said recess disposed centrally therein, a holder for said detonator, and a plug fitted within said recess and adapted to position said detonator and holder with respect to said boss.

4. A stoppering and opening device for fluid containers according to claim 1 in which the explosive charge is a detonator.

5. A stoppering and opening device for fluid containers according to claim 1 in which said explosive charge comprises gun powder.

6. A stoppering and opening device according to claim 1 further comprising a tubular fitting having a socketed end adapted to be connected to said discharge outlet and a seating for said diaphragm arranged angularly in said fitting.

7. A stoppering and opening device according to claim 1 further comprising a tubular fitting having a socketed end adapted to be connected to said discharge outlet, a seating for said cover member arranged angularly in said fitting, and a tubular boss extending angularly from said tubular fitting, said seating being formed partly in the wall of said tubular fitting and partly in said tubular boss, the arrangement being such that after it has been severed said inner portion drops into said tubular boss, leaving an unrestricted discharge passage in said tubular fitting.

8. A stoppering and opening device for fluid containers according to claim 1 wherein said cover member comprises a cup-shaped fitting formed at its inner portion with an integral disc having machined therein circular and radial grooves of V-shape in cross-section to separate a diaphragm part of the disc from a rim portion thereof, the diameter of said circular groove being substantially equal to that of said discharge outlet.

9. A stoppering and opening device for fluid containers according to claim 1 wherein said cover member comprises a cup-shaped fitting formed at its inner portion with an integral disc having machined therein a circular groove of V-shape in cross-section, the diameter of said groove being substantially equal to that of said discharge outlet, said last-mentioned frangible portion being formed centrally as a head in said disc and projecting into said discharge outlet.

10. A stoppering and opening device for fluid containers according to claim 1 wherein said cover member comprises a cup-shaped fitting formed at its inner portion with an integral disc having machined therein a circular groove of V-shape in cross-section to separate a diaphragm part of the disc from a rim portion thereof, the diameter of said groove being substantially equal to that of said discharge outlet, said last-mentioned frangible portion being formed centrally as a head in said disc and projecting into said discharge outlet, said explosive charge comprising a detonator one end of which is mounted in said head, and further comprising a holder for said detonator, and a junction box in which said holder is secured.

11. A stoppering and opening device for fluid containers according to claim 1 further comprising a strainer disposed adjacent to said cover member in the path of the fluid discharged from said container to arrest any solid particles in the discharged fluid.

12. A stoppering and opening device for a fluid container provided with at least one discharge outlet, comprising a cover member extending substantially across said discharge outlet, said cover member having an outer portion and an inner portion coaxially disposed relative to said outer portion and hermetically connected to said outer portion by a frangible portion, said inner portion compris-

ing a hollow portion having the end thereof which is adjacent to the fluid closed by a frangible portion adapted to project from the inner portion into the fluid bearing against the cover member, and an explosive charge positioned within the interior of said hollow portion adjacent to said last-mentioned frangible portion to produce upon ignition an explosive force which reacts against the fluid to sever said first-mentioned frangible portion.

13. A stoppering and opening device for a fluid container provided with at least one discharge outlet, comprising a cover member extending substantially across such discharge outlet, said cover member having an inner portion of substantially the same diameter as the diameter of the discharge outlet, said cover member further having an outer portion co-axially disposed relative to said inner portion and hermetically connected to said inner portion by a frangible annular portion, said inner portion having a central socket and a frangible hood projecting from the inner portion into the fluid bearing against the inner portion and normally closing off the interior of the socket from the fluid, and an explosive charge positioned in said socket and in the projecting part of said hood to produce upon ignition an explosive force which fractures said hood and acts against said fluid and against said inner portion to rupture said frangible portion and force said inner portion away from said outer portion and the container, thereby permitting full-bore discharge of fluid from said outlet.

14. A stoppering and opening device according to claim 13 wherein the cover member comprises a cup-shaped fitting in which said annular frangible portion comprises a reduced section separating said inner portion from said outer portion, said outer portion comprising a rim portion of the fitting, said hood projecting into the discharge outlet.

15. A stoppering and opening device for a fluid container provided with at least one discharge outlet, comprising a closure member extending substantially across such discharge outlet for normally closing the outlet, said closure member having an outer portion adapted to be hermetically sealed to the container and an inner portion co-axially disposed relative to said inner portion and hermetically connected to said outer portion by a frangible portion, said inner portion including a hollow portion having the end thereof which is adjacent to the fluid closed by a frangible portion adapted to project from the inner portion into the fluid bearing against the closure member, and an explosive charge positioned within the interior of said hollow portion and adjacent to said last-mentioned frangible portion to produce an explosive force upon ignition which ruptures said last-mentioned frangible portion and acts against the fluid and said inner portion to rupture said first-mentioned frangible portion and force said inner portion away from said outer portion and the container.

16. A stoppering and opening device for a fluid container provided with at least one discharge outlet, comprising a cup-shaped fitting extending substantially across said discharge outlet for normally closing the outlet, said fitting having an outer rim portion and an inner portion hermetically connected to said rim portion by a frangible reduced section, said inner portion having a recess the base of which is formed by a frangible portion projecting into the discharge outlet and normally isolating the recess from the fluid bearing against the fitting, and an explosive charge positioned in said recess and adjacent to said frangible portion to produce upon ignition an explosive force which fractures said frangible portion and acts against said fluid and said inner portion to sever said frangible reduced section.

17. A stoppering and opening device according to claim 16 wherein said explosive charge comprises a detonator projecting into the discharge outlet for approximately two thirds of its length.

18. A stoppering and opening device according to claim 16 wherein said rim portion is provided with a recess, and a sealing washer located in said recess to provide a fluid-tight seal between said discharge outlet and said rim portion.

19. A stoppering and opening device according to claim 16 wherein said inner portion comprises a boss having said recess formed centrally therein, and a device secured in said recess for holding said explosive charge.

20. A stoppering and opening device according to claim 16 wherein said inner portion comprises a boss having said recess disposed centrally therein, a cylindrical device secured in said recess for holding said explosive charge, said cylindrical device being co-axial with said boss and of smaller diameter whereby a shoulder is formed between said boss and said cylindrical device, a junction-box fitting adapted to be fitted to the container, and an abutment in said junction-box fitting adapted to engage said shoulder and arrest the downward movement of said boss when said first-mentioned frangible portion is severed.

21. A stoppering and opening device according to claim 19 wherein said holding device is detachably secured in said recess.

22. A stoppering and opening device according to claim 20 wherein said junction-box fitting is shaped and positioned with respect to said cup-shaped fitting to provide an unobstructed outlet for the fluid when said frangible reduced section is severed.

23. A stoppering and opening device for a fluid container provided with at least one discharge outlet, comprising a cover member extending substantially across such discharge outlet, said cover member having an outer portion and an inner portion radially inwardly of the outer portion and hermetically connected thereto by a frangible portion, said inner portion having a cavity whose walls, at least in part, project into said container to be surrounded by the fluid, said projecting walls being yieldable in the direction of said fluid in response to a given rise in pressure within said cavity, and an explosive charge positioned and proportioned within said cavity so as to produce upon ignition an explosive force providing said given rise in pressure within said cavity which acts through said yieldable walls against the fluid and thereafter against said inner portion to sever said frangible portion.

24. A stoppering and opening device for a fluid container according to claim 23 wherein said projecting walls comprise a cap disposed on the container side of said inner portion, and a bellows device connected to said cap and said inner portion so as to form an expansible explosion chamber.

25. A stoppering and opening device for a fluid container provided with at least one discharge outlet, comprising a cover member extending substantially across such discharge outlet, said cover member having an outer portion and a concentric inner portion hermetically connected to said outer portion by a frangible portion, an explosive charge secured to said cover member and arranged upon ignition to cause fracture of said frangible portion and to urge said inner portion away from said discharge outlet, supporting means secured to said container and positioned adjacent said discharge outlet, and means secured to said inner portion and slidably mounted in said supporting means for guiding said inner portion, upon severance from said outer portion, to a position least likely to impede discharge of the fluid.

References Cited in the file of this patent

UNITED STATES PATENTS

1,959,822	Greve	May 2, 1934
2,436,364	McDowell	Feb. 17, 1948
2,478,958	Wheeler et al.	Aug. 16, 1949
2,480,967	Ritchie	Sept. 6, 1949