United States Patent [19]

Worwag

[11] **3,807,648**

[45] **Apr. 30, 1974**

[54] **CABLE DISPENSER FOR RISE-AND-FALL ELECTRICAL FITTINGS**

[76] Inventor: **Hans Michael Worwag,** Knesebeckstr. 11, 1 Berlin 12, Germany

[22] Filed: **Nov. 9, 1972**

[21] Appl. No.: **304,998**

[30] **Foreign Application Priority Data**

Oct. 10, 1972 Germany 2159496

[52] **U.S. Cl.** ..... **242/54 R,** 242/125.2

[51] **Int. Cl.** **B65h 75/00,** B65h 75/28

[58] **Field of Search** ..... 242/54 R, 107 R, 125.2

[56] **References Cited**

UNITED STATES PATENTS

2,605,977	8/1952	Gleason	242/54
3,185,399	5/1965	Pellicciotti	242/54
2,858,085	10/1958	Strang	242/54
3,222,002	12/1965	Holberg	242/54
3,545,693	12/1970	Gurner et al.	242/54

Primary Examiner—Leonard D. Christian

Attorney, Agent, or Firm—Darbo, Robertson & Vandenburgh

[57] **ABSTRACT**

Cable for rise-and-fall electric fittings, e.g., overhead television studio light fittings, is dispensed and retracted in synchronism with movement of the fitting without rubbing electrical contacts by a pair of motor-driven drums upon which cable leading to the fitting and cable leading to a conventional electrical outlet, respectively, is wound and unwound by an electric motor running in synchronism with the movement of the fitting.

5 Claims, 5 Drawing Figures

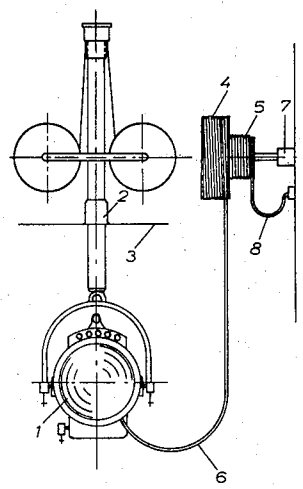

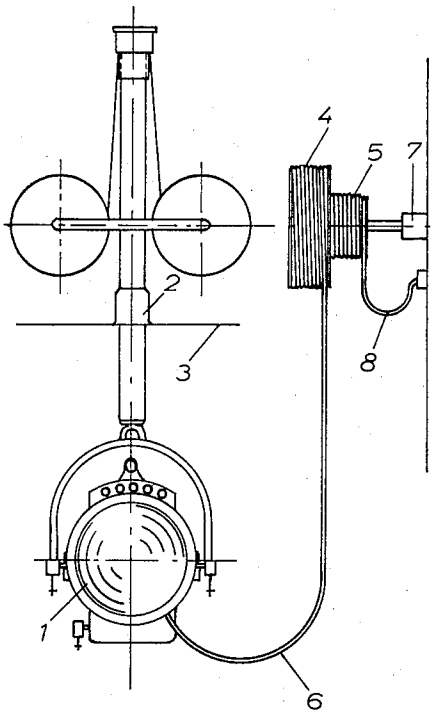

Fig.1

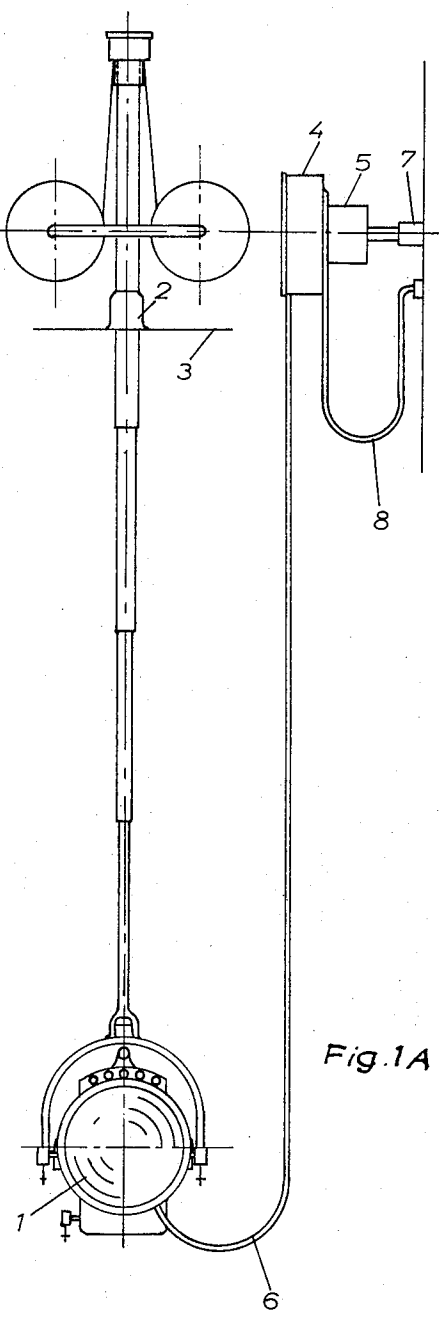

Fig.1A

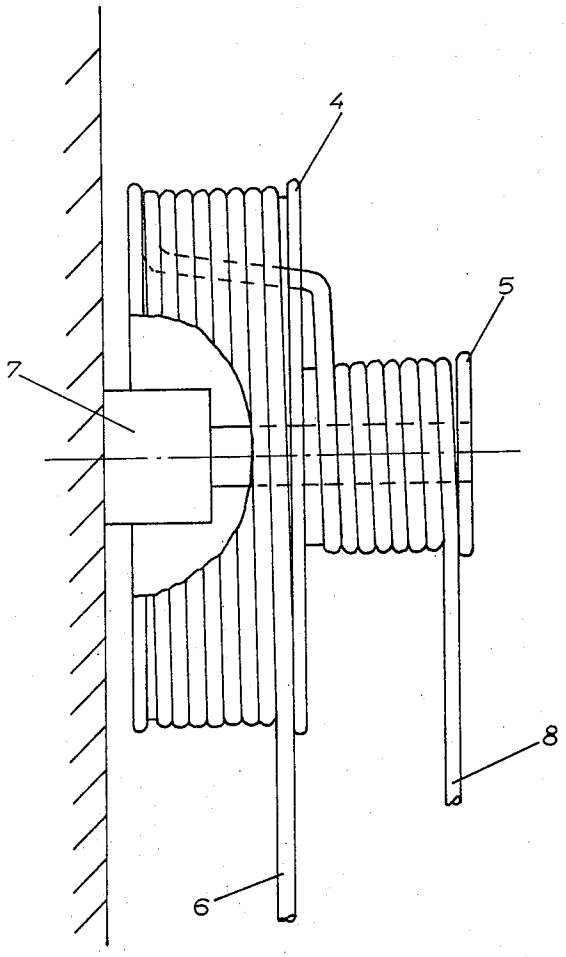

Fig. 2

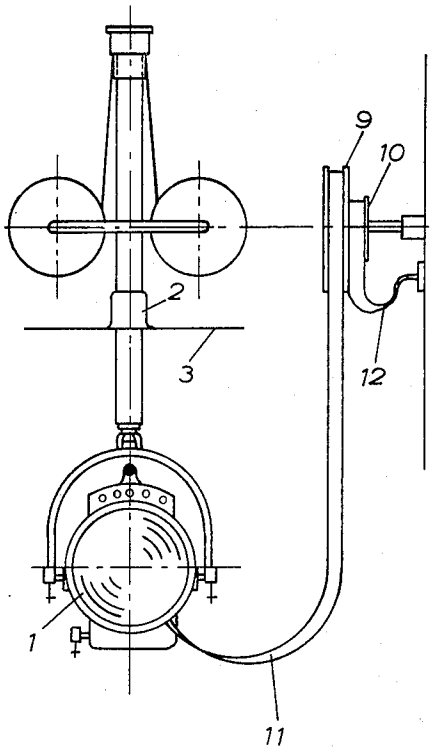

Fig. 3

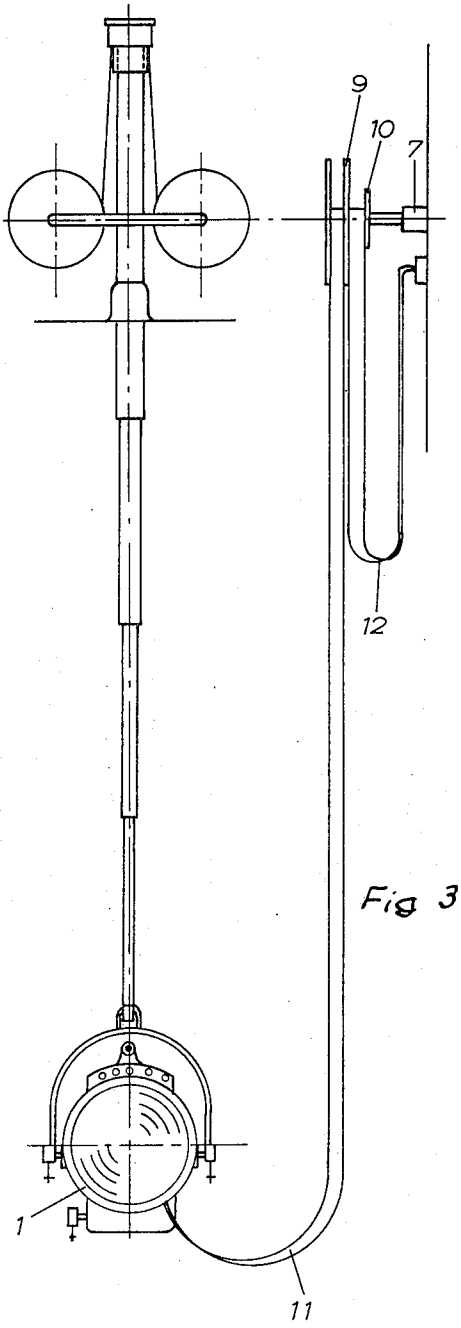

Fig 3A

CABLE DISPENSER FOR RISE-AND-FALL ELECTRICAL FITTINGS

BACKGROUND AND SUMMARY OF THE INVENTION

The invention relates to cable dispensers for rise-and-fall electric fittings; e.g., light fittings, a length of cable corresponding to the actual change in fitting position being wound upon or off from a drum.

Rise-and-fall light pendants are used in film and television studios where the floor has to be kept very clear of obstacles. Consequently, not only the light fittings but also the supply cable therefor are suspended from overhead supports; when the light fitting rises, the cable winds on to a drum which takes up cable which would otherwise sag and be a nuisance. The dispensing drive for the drum is provided by an electric motor running in synchronism with rise-and-fall motions of the light fitting, so that the same is not stopped by the cable and so that the cable is not bent in excess of its minimum bending radius. Conventionally, the cable is connected to the power supply by way of rubbing contacts. The same must be high-reliability devices; unfortunately, they experience heavy stressing in continuous operation and therefore wear in a way which reduces the working life of the system.

It is an object of this invention to provide a cable dispenser whose cable can be connected to the power supply by conventional connections instead of by way of rubbing contacts.

According to the invention, therefore, the drum is a dual drum, a first length of cable wound on the first drum section is connected to the light fitting, and a second cable length wound on the second drum section is connected in normal way to a power supply.

Advantageously, the drum sections are of different diameters from one another and the peripheral speed of the first drum section is equal to the rise-and-fall speed of the light fitting. In this case, each cable length is wound in just a single layer on the drum sections. Either the cable can be unitary or the cable lengths can be connected to one another on the dual drum.

The radius of curvature of the cable loops in any position of the light fitting should be greater than the minimum permissible radius of bend or curvature.

Embodiments of the invention are shown in the drawings and will be described hereinafter with reference thereto.

DESCRIPTION OF THE DRAWINGS

FIG. 1 is a view which shows, largely diagrammatically, a lighting pendant associated with one embodiment of the dispenser according to the invention, the pendant being shown at its top position and the cable retracted.

FIG. 1A is a view which shows the equipment of FIG. 1 with the pendant at a lower position and the cable dispensed out correspondingly.

FIG. 2 is a side view of the dispenser.

FIG. 3 is a view similar to FIG. 1 showing a lighting pendant associated with another embodiment of the dispenser with the pendant at top position and cable retracted.

FIG. 3A is a view which shows the equipment of FIG. 3 with the pendant at a lower position and the cable dispensed out accordingly.

DESCRIPTION OF SPECIFIC EMBODIMENTS

Referring to FIGS. 1 and 1A, a light fitting 1 is associated with a pendant 2 which is secured to a ceiling 3 and which provides a rise-and-fall adjustment for the fitting 1. The same is shown in its raised (retracted) position in FIG. 1 and in its fully lowered (extended) position in FIG. 1A. Connected to fitting 1 is a cable which in the present case is a round cable. The cable is wound on a dual drum comprising drum sections 4, 5 of different diameters from one another and is connected at its other end to a power supply. A driving motor 7, which may be mounted upon a wall, rotates a shaft on which the dual drum is fixed. The cable length connected to the light fitting or the like 1 is wound on the larger diameter drum section 4 and the cable length which has provision for connection to a power supply is wound on the smaller diameter drum section 5. As will be apparent, the cable length on drum section 4 is such that the radius of curvature of cable loop 6 when the fitting 1 is in its two end positions is the same, as is also the radius of curvature of cable loop 8 associated with the connection to a power supply. That is to say, the slack allowed in the cable to permit free operation of the pendant is the same for all positions of the pendant. This is accomplished by mechanically or electrically interconnecting the pendant and its associated dispenser to effect the desired synchronized movement.

Conveniently, the diameter of the section 5 is such that a relatively short cable suffices for the connection to the power supply. Another condition to be observed in this connection is that the diameter of section 5 must be at least large enough for the cable not to be bent to below its minimum bend radius as it is wound onto the drum.

FIG. 2 shows a drum construction which takes up very little space and whose center of gravity is well positioned. Motor 7 is located inside drum 4. As can also be clearly seen in FIG. 2, the cable is spirally wound upon the two drum sections in the same direction and in just a single layer. In this construction the entire cable is a unitary member and the part interconnecting the two lengths of cable extends through the inside of the drum section 4 substantially parallel to the axis thereof. If required, the discrete cable lengths can be interconnected by appropriate connectors.

In the embodiment shown in FIGS. 3 and 3A, a light fitting or the like 1 is mounted by means of a rise-and-fall pendant 2 on a ceiling 3, the fitting being shown in its fully raised (retracted) position in FIG. 3 and in its fully lowered (extended) position in FIG. 3A. In this embodiment the cable extending between the light fitting and the connection to a power supply is a flat cable which is wound in a planar spiral (as distinguished from a helical spiral as is shown in FIGS. 1 and 1A) in the same direction on corresponding drum sections 9, 10. The cable length wound on the individual drum sections must be such that the radius of curvature of the loops 11, 12 is always greater than the permissible minimum bend radius of the cable. As in the previously described embodiment, the length of cable can be interconnected by connectors or the cable can be a unitary member.

In the dispensers described, the two drum sections 4, 5 or 9, 10 rotate at the same speed so that the two component lengths of cable can be either unitary or interconnected via some form of connector and so that one

cable end can be plugged into the power main conventionally. There is therefore no need for current to be supplied by way of rubbing contacts, with the disadvantages mentioned, in comparison with which the slight extra cost involved in providing a divided drum and an extra length of cable is negligible.

I claim:

1. A cable dispenser for rise-and-fall electrical fittings comprising a dual drum having two coaxial drum sections fixed together, a motor drivingly connected with said drum to rotate it in either direction, a length of cable having an electrical connecting plug on one end thereof and adapted to be spirally wound upon the first of said drum sections upon rotation thereof, a second length of cable adapted to be connected with a rise-and-fall electrical fitting and to be spirally wound upon the second of said drum sections upon rotation thereof, said two lengths of cable being connected to provide a continuous electrical conductor from said

plug to the end adapted to be connected with the fitting.

2. A cable dispenser in accordance with claim 1 wherein the first drum section is smaller in diameter than the second drum section.

3. A cable dispenser in accordance with claim 1 wherein the drum is hollow and the motor is located within said drum and is adapted to be mounted upon a wall to support said drum.

4. A dispenser in accordance with claim 1 wherein the drum sections are sufficiently long to permit helical winding of both lengths of cable respectively thereon.

5. A dispenser in accordance with claim 1 wherein the drum sections have end flanges spaced apart sufficiently to accommodate a planar spiral of cable therebetween.

* * * * *