Dec. 22, 1964 M. E. LOVELL 3,162,134

ELECTROMAGNETIC PUMP AND ENERGIZING MEANS THEREFOR

Filed Nov. 24, 1961 3 Sheets-Sheet 1

Fig. 1

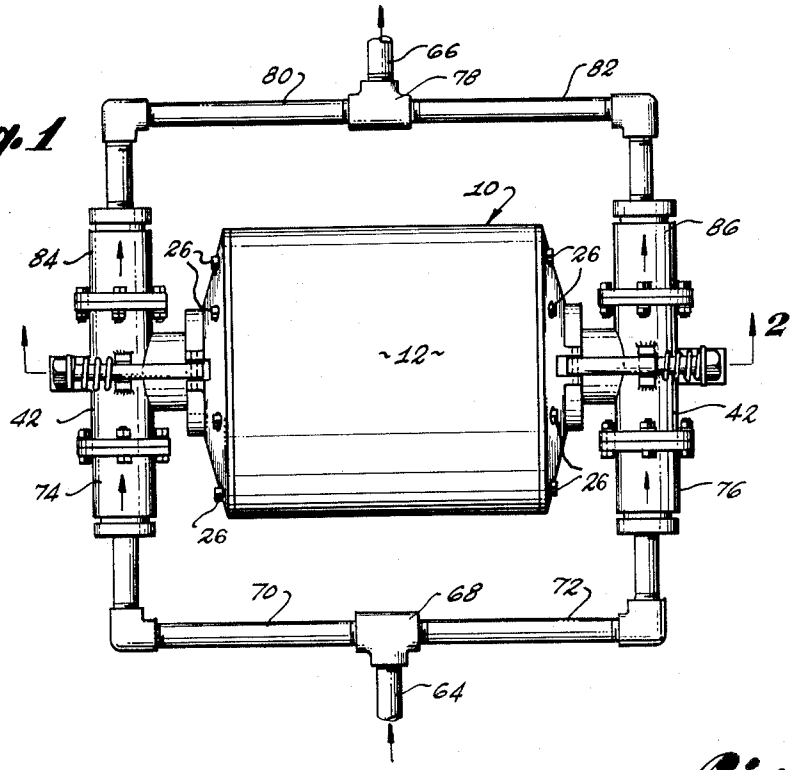

Fig. 2

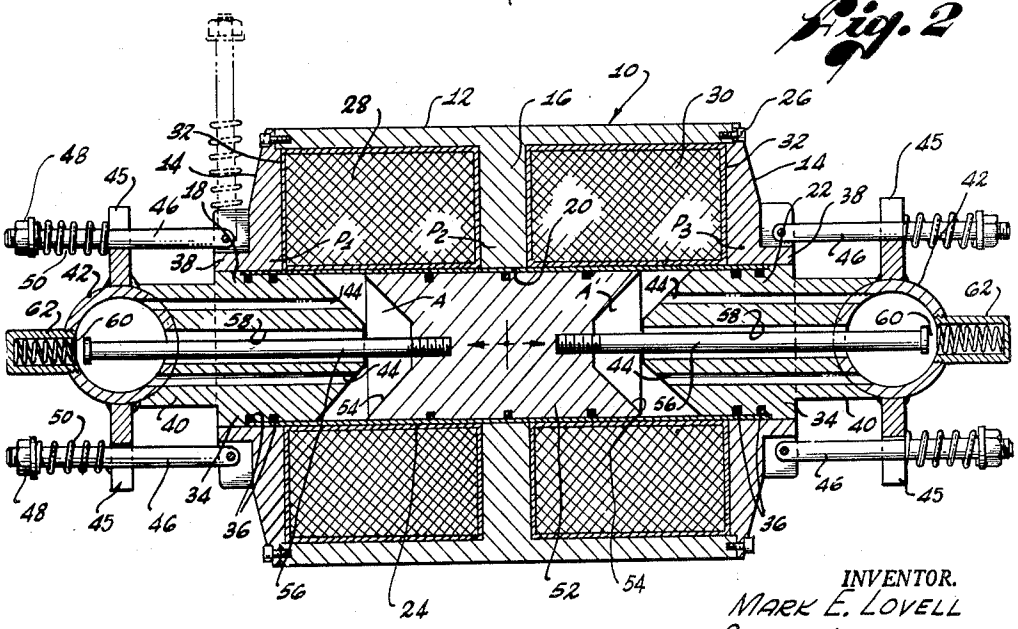

INVENTOR.
MARK E. LOVELL
BY Lilly & Nyhagen
ATTORNEYS

Dec. 22, 1964 M. E. LOVELL 3,162,134

ELECTROMAGNETIC PUMP AND ENERGIZING MEANS THEREFOR

Filed Nov. 24, 1961 3 Sheets-Sheet 2

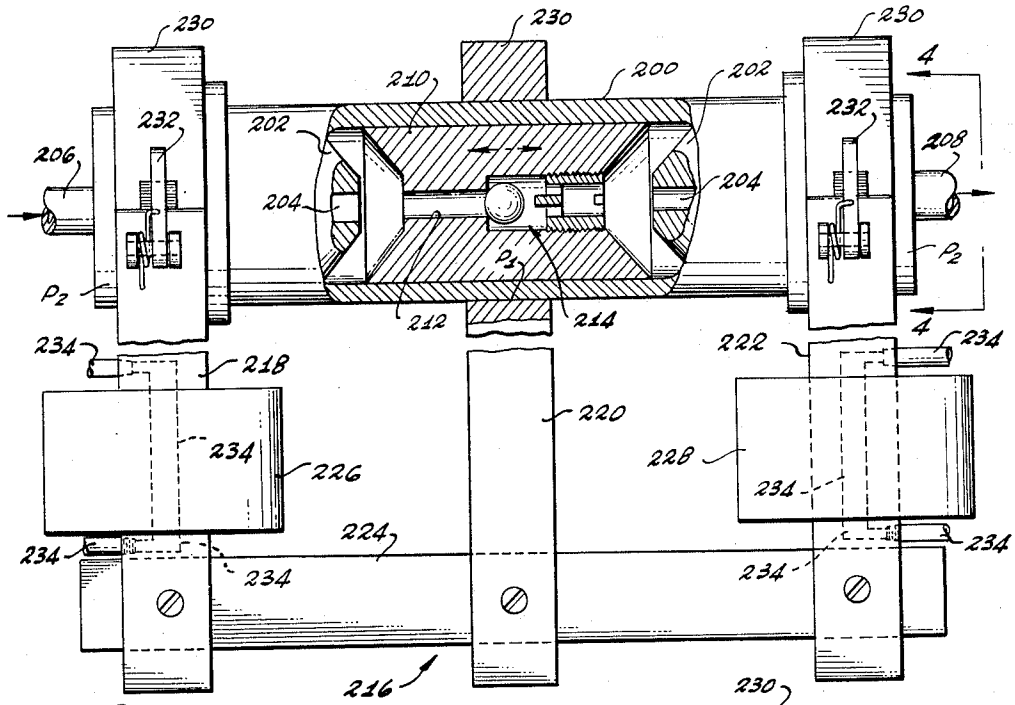

Fig. 3

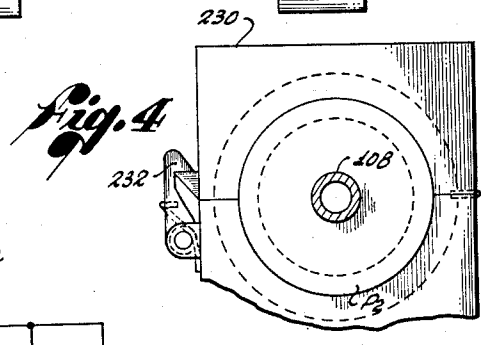

Fig. 4

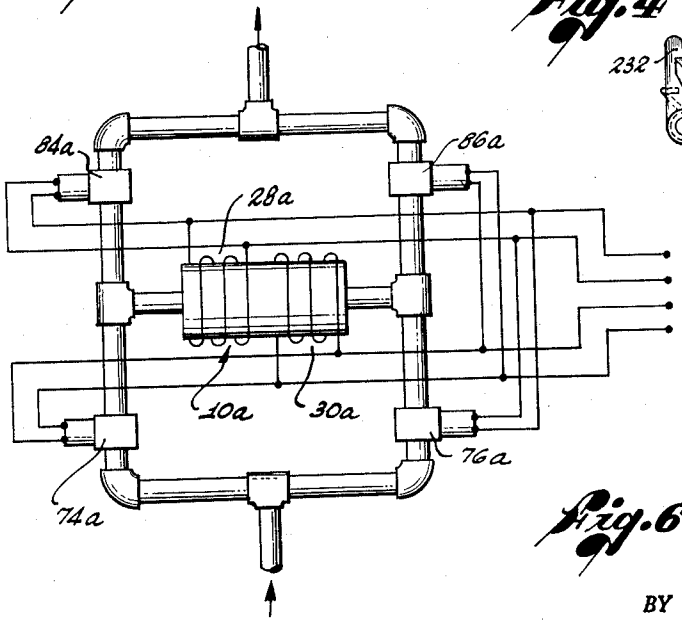

Fig. 6

INVENTOR.
MARK E. LOVELL
BY Lilly & Nyhagen
ATTORNEYS

Dec. 22, 1964 M. E. LOVELL 3,162,134

ELECTROMAGNETIC PUMP AND ENERGIZING MEANS THEREFOR

Filed Nov. 24, 1961 3 Sheets-Sheet 3

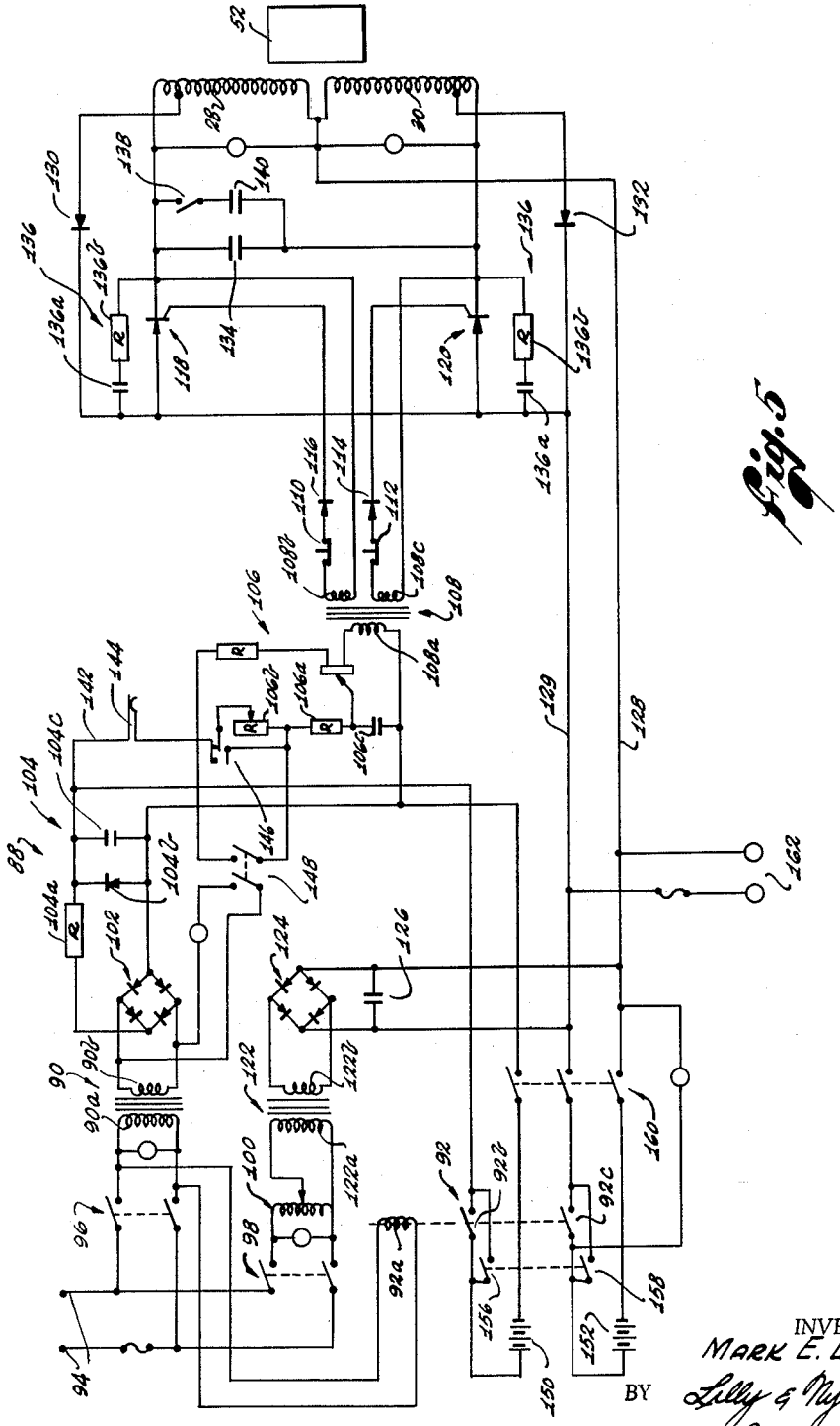

Fig. 3

INVENTOR.
MARK E. LOVELL
BY Lilly & Nyhagen
ATTORNEYS

United States Patent Office 3,162,134 Patented Dec. 22, 1964

3,162,134
ELECTROMAGNETIC PUMP AND ENERGIZING MEANS THEREFOR

Mark E. Lovell, 4060 Sumac Drive, Sherman Oaks, Calif.
Filed Nov. 24, 1961, Ser. No. 154,417
8 Claims. (Cl. 103—53)

This invention relates generally to fluid pumps and has as it general object to provide an improved electromagnetically actuated piston pump or compressor and an energizing circuit therefor.

Another object of the invention is to provide an improved electromagnetically actuated piston pump which has a high operating efficiency and a long operating life.

Yet another object of the invention is to provide an improved electromagnetically actuated piston pump which is completely leakproof and embodies no packing glands or shaft seals so as to be uniquely adapted to applications wherein leakage of the fluid being pumped must be avoided, as in the case of corrosive, explosive, and high temperature fluids, as wall as to applications wherein contamination of the fluid being pumped must be avoided for sanitary or other reasons.

A further object of the invention is to provide an improved electromagnetically actuated piston pump in which two windings are alternately energized to reciprocate the pump piston, and an energizing circuit for the pump which is devoid of any moving electrical contacts or other points of arcing during alternate energizing and deenergizing of the pump windings, which is adjustable to vary the pumping rate and/or the discharge pressure of the pump, and which can be manually controlled, from a remote location, if desired, to allow metering of a known volume of liquid into a system.

A still further object of the invention is to provide an electromagnetically actuated piston pump of the character described and an energizing circuit therefor which can be powered from an A.C. source or a D.C. source, such as batteries, so as to be adapted for use in installations having only an A.C. power supply or a dual power supply, such as hospitals and ships, as well as in mobile installations having only a D.C. power supply, such as trucks and trains. The D.C. power supply can be conditioned for emergency stand-by operation to assume energizing of the pump automatically in response to failure of the A.C. supply.

Yet a further object of the invention is to provide an electromagnetically actuated pump which is compact, may be single-acting or double-acting, can be readily cleaned, and possesses various other unique features of construction and operation whereby the pump is ideally suited to its intended purposes.

Briefly, the objects of the invention are achieved by providing a pump equipped with a nonmagnetically permeable cylinder, a magnetically permeable piston in the cylinder, and an electromagnetic field structure on the outside of the cylinder. This field structure includes three poles located at the center and ends, respectively, of the cylinder and two windings to be alternately energized for creating electromagnetic fields between the two end poles and the center pole alternately. One field moves the piston in one direction in the cylinder and the other field moves the piston in the opposite direction.

The pump windings are alternately energized, to reciprocate the piston in the cylinder, by an electrical circuit utilizing silicon control rectifiers in series with the pump windings and an oscillator for triggering these rectifiers in such a way as to allow current flow through the windings alternately. This circuit has no moving contacts or other points at which arcing might occur during alternate energizing and denergizing of the pump windings. The output frequency of the oscillator can be

varied to vary the pump speed, and the current flow through the windings can be adjusted to vary the discharge pressure. Suitable check or electromagnetic valves are used to effect a flow of fluid from the pump inlet to the pump outlet during operation of the pump.

The energizing circuit has provision for operation of the pump from either an A.C. power supply or a D.C. or battery power supply and can be conditioned for operation of the pump from either supply. The circuit embodies an A.C. power failure relay which is adapted to effect operation of the pump by the battery supply automatically in response to failure of the A.C. supply. Means are provided in the circuit for manual triggering of the pump, and the circuit has jacks for connection to a remote control unit whereby the pump can be manually controlled from a remote location.

One illustrative embodiment of the present pump is double-acting. Another illustrative embodiment is single-acting. According to the invention, the pump cylinder may be detachable from the field structure to permit the latter to be used with different cylinders or the cylinder with different field structures. One illustrative embodiment utilizes liquid coolant passages and is otherwise uniquely designed for high temperature operation.

The invention will be better understood from the following detailed description thereof, taken in connection with the attached drawings, wherein:

FIG. 1 illustrates a double-acting electromagnetically actuated pump according to the invention;

FIG. 2 is an enlarged section taken along line 2—2 on FIG. 1;

FIG. 3 illustrates a single-acting, liquid cooled, electromagnetically actuated pump according to the invention;

FIG. 4 is a section taken along line 4—4 on FIG. 3;

FIG. 5 diagrammatically illustrates an oscillator circuit for alternately energizing the windings of the pumps shown in FIGS. 1 and 3; and

FIG. 6 diagrammatically illustrates an alternative electromagnetic valve arrangement for the pump.

Pump 10 illustrated in FIGS. 1 and 2 of these drawings comprises a magnetically permeable cylindrical housing 12. Closing the ends of this housing are magnetically permeable discs or end plates 14. Within, and midway between the ends of the housing 12, is a center, magnetically permeable disc or plate 16. Plates 14 and 16 have central, coaxial bores 18, 20 and 22. Extending from one end of the pump to the other and through these coaxial bores is a nonmagnetically permeable sleeve 24 which forms the cylinder of the pump. Cylinder 24 has a close sliding fit in the bores so that the cylinder may be removed for repair or replacement. End plates 14 are secured to the housing 12 by bolts 26. Center plate 16 may be formed integrally with the housing 12, as shown, or it may be a separate piece which is press fitted or otherwise fixed in the housing or shell 12.

Encircling the left-hand end of the pump cylinder 24, within the annular space between the left-hand end plate 14 and the center plate 16, is a first electromagnetic coil or winding 28. Encircling the right-hand end of the cylinder, within the annular space between the right-hand end plate 14 and center plate 16, is a second electromagnetic coil or winding 30. These windings are preferably wound on annular forms or spools 32 so that the windings can be easily inserted into and removed from the pump by removing the end plates 14.

Closely but removably fitted in the ends of the pump cylinder 24 are magnetically permeable plugs 34. O-rings 36 provide a fluid-tight seal between the cylinder and the plugs. Plugs 34 are formed wtih radial flanges or shoulders 38 which position them axially in the pump cylinder.

Plugs 34 are formed with outer, axial extensions 40

which are cylindrically recessed at their ends to seat transverse fluid conduits 42. The plug extensions 40 and conduits 42 are joined, as by welding. Extending axially through the plugs 34 are fluid passages 44 which open at one end to the adjacent end of the pump cylinder 24 and at the other end into the adjacent fluid conduit 42. Welded to opposite sides of each fluid conduit 42 are slotted flanges 45. A pair of toggle bolts 46 are hinged to each end plate 14 and are received in the slots of the flanges 45. Encircling the outer ends of these bolts, between the flanges 45 and nuts 48 on the outer ends of the bolts, are compression springs 50. Springs 50, therefore, yieldably retain the plugs 34 in position in the ends of the pump cylinder 24.

Slidably received within the pump cylinder 24, for reciprocation between the plugs 34, is a magnetically permeable piston 52. The inner ends of the plugs 34 are tapered, as shown, and the ends of the piston 52 are formed with tapered recesses 54 which complement the tapered ends of the plugs, for reasons to be presently discussed.

Threaded in and extending axially from each end of the piston 52 is a stem 56. Stems 56 extend through central bores 58 in the plugs and into the fluid conduits 42. Compression springs 60, aligned with the stems 56, are contained within spring holders 62 threaded in the fluid conduits 42. During left-hand movement of the piston 52 in the cylinder 24, the left-hand stem 56 engages and compresses the left-hand spring 60. During right-hand travel of the piston 52 in the pump cylinder 24, the right-hand stem 56 engages and compresses the right-hand spring 60. The function of these springs will be described shortly.

The shell 12, end plates 14, center plate 16, and windings 28 and 30 form an electromagnetic field structure on the outside of the pump cylinder 24. The inner edge portions of the plates 14 and 16, about their respective bores 18, 20, and 22, form the poles P_1, P_2, and P_3 of this magnetic field structure. Poles P_1 and P_3 are located at the ends, respectively, of the pump cylinder 24 and in close proximity to (in actual contact with) the pump cylinder. The third pole P_2 is located at the center of and in close proximity to (in actual contact with) the center of the pump cylinder.

It is evident that when the left-hand winding 28 is energized, a magnetic field is created between the center pole P_2 and the pole P_1 at the left-hand end of the pump cylinder 24. Recalling that the plugs 34 and piston 52 are constructed of magnetically permeable material, and observing that the left-hand pole P_1 is closely adjacent the left-hand plug 34 and the center pole P_2 is closely adjacent the piston 52, it is evident that magnetic lines of force of the magnetic field created by energization of the left-hand winding 28 extend between the left-hand plug and the piston and across the air gap A between these parts. An electromagnetic force is thereby created on the piston 52 which acts to move the latter in a direction to reduce the air gap A. When the winding 28 is energized, therefore, piston 52 is moved to the left in FIG. 2 by the action of the electromagnetic field. Similarly, when the right-hand winding 30 is energized, magnetic lines of force extend between the right-hand plug 34 and the piston 52 and across the aim gap A′ between these parts. An electromagnetic force then acts on the piston 52 to move the latter in a direction to reduce the air gap A′. Accordingly, when the winding 30 is energized, the pump piston 52 is moved to the right in FIG. 2. From this description, it is evident that the piston 52 may be reciprocated within the pump cylinder 24 by alternate energizing of the pump windings 28 and 30. The inner ends of the plugs 34 and the ends of the piston 52 are tapered, as described earlier, in accordance with conventional practice for the purpose of reducing the air gap between these parts and, therefore, increasing the electromagnetic force on the piston, while maintaining a given overall piston travel.

It is evident that when either of the windings 28 or 30 is energized, the electromagnetic force on the piston increases rapidly as the air gap between the piston and the corresponding plug 34 decreases. This rapidly increasing force on the piston at the ends of its travel in the pump cylinder produces periodic pressure peaks in the pump output, which peaks may be undesirable. Springs 60 are provided to minimize these peaks. Thus, the piston stems 56 are proportioned so that they engage their respective springs 60 at some position in the corresponding direction of travel of the piston. During the remaining part of the piston travel, the springs 60 are compressed by the piston stems. When the magnetic field of the pump is reversed, the compressed spring exerts a force on the piston in the same direction as the electromagnetic force developed by the reversed magnetic field. Thus, during the terminal portion of each stroke of the piston 52, one or the other of the pump springs 60 absorbs a portion of the energy of the electromagnetic field which is currently moving the piston and, upon reversal of the pump field to reverse the direction of travel of the piston, delivers this energy to the piston in a direction to aid the reversed field. Springs 60, therefore, act to equalize the output pressure of the pump.

In FIG. 1, the inlet of the pump is designated by the numeral 64 and the output of the pump by the numeral 66. Inlet 64 connects to a T 68 from which extend two branch fluid lines 70 and 72. Branch line 70 terminates in a flanged valve housing 74 which is bolted to the lower flanged end of the left-hand pump conduit 42. Branch line 74 terminates in a flanged valve housing 76 which is bolted to the lower flanged end of the right-hand pump conduit 42.

Similarly, pump outlet 66 connects to a T 78 from which extend two branch fluid lines 80 and 82. Branch line 80 terminates in a flanged valve housing 84 which is bolted to the flanged upper end of the left-hand pump conduit 42. Branch line 82 terminates in a flanged valve housing 86 which is bolted to the upper flanged end of the right-hand pump conduit 42.

Contained within valve housings 74, 76, 84, 86 are suitable check valves, not shown, which permit fluid flow in the direction indicated by the arrow on each valve housing.

From this description, it is evident that when pump winding 28 is energized to cause left-hand travel of the piston 52 in the pump cylinder 24, fluid is drawn into the right-hand end of the cylinder through check valve 76, the right-hand pump conduit 42, and the fluid passages 44 in the right-hand cylinder plug 34. Check valve 86 is closed. Simultaneously, fluid is expelled from the left-hand end of the cylinder 24 through the fluid passages 44 in the left-hand cylinder plug 34, the left-hand pump conduit 42, and check valve 84. Check valve 74 is closed.

Similarly, when pump winding 30 is energized to cause right-hand travel of the piston 52 in the pump cylinder 24, fluid is drawn into the left-hand end of the cylinder through check valve 74, the left-hand pump conduit 42, and the fluid passages 44 in the left-hand cylinder plug 34. Simultaneously, fluid is expelled from the right-hand end of the cylinder 24 through the fluid passages 44 in the right-hand cylinder plug 34, the right-hand pump conduit 42, and the check valve 86. Check valves 76 and 84 are now closed.

Thus, during each right-hand and left-hand stroke of the piston 52, fluid is pumped from the pump inlet 64 to the pump outlet 66.

Reference is now made to FIG. 5 illustrating the circuit 88 for alternately energizing the pump windings 28 and 30. Circuit 88 comprises a transformer 90 and an A.C. power failure relay 92. The primary winding 90*a* of the transformer 90 and the coil 92*a* of the relay 92 are connected with a pair of A.C. power input terminals 94 through a line switch 96. Also connected to the A.C. input terminals 94, through a stand-by switch 98, is an auto-

transformer 100. The secondary winding 90*b* of the transformer 90 energizes a full wave bridge rectifier 102. The output of this rectifier is connected to a conventional shunt voltage regulator 104 consisting of a resistor 104*a*, a Zener diode 104*b*, and a capacitor 104*c*. The shunt voltage regulator 104 operates in the well-known manner to develop a constant D.C. output which is fed to a conventional unijunction transistor oscillator 106. This oscillator generates a pulse output voltage, the pulse rate of which is determined by the RC constant of a resistor 106*a*, a potentiometer 106*b*, and a capacitor 106*c* in the oscillator circuit. Adjustment of the potentiometer 106*b*, then, varies the pulse rate of the oscillator.

The pulsed output of the oscillator 106 is impressed across the primary winding 108*a* of a pulse transformer 108. This transformer has two secondary windings 108*b* and 108*c* which are connected, through manual pulse switches 110 and 112 and blocking diodes 114 and 116, to the gate-cathode circuits of two silicon control rectifiers 118 and 120.

The autotransformer 100 supplies variable A.C. power to the primary winding 122*a* of a transformer 122, the secondary winding 122*b* of which is connected to a full wave bridge rectifier 124. A capacitor 126 is connected across the output of this rectifier and provides a zero source impedance to the reactive power flowing in the circuit. Pump windings 28 and 30 have a common connection to a lead 128 which connects to the negative output terminal of the rectifier 124. The positive output terminal of the rectifier 124 is connected through a lead 129 to the common heat sink (not shown) of the silicon control rectifiers 118 and 120 and to a pair of bypass diodes 130 and 132.

When a voltage pulse is applied to the gates of the silicon control rectifiers 118 and 120 from the oscillator 106 through the pulse transformer 108, one of the rectifiers will always start to conduct at a lower gate voltage than the other due to the slight difference in the characteristics between any two silicon rectifiers. Let us assume that silicon control rectifier 118 starts to conduct first. Conduction of the silicon control rectifier 118 retains the silicon control rectifier 120 in its nonconducting state and conducts current from lead 129 through the pump winding 28 to the lead 128. Due to transformer action, twice the applied voltage appears across the two outside terminals of the pump windings 28 and 30. This voltage charges a commutating capacitor 134, connected across the two outside terminals of the pump windings, to twice the line voltage. When the next voltage pulse appears at the gates of the silicon control rectifiers 118 and 120, rectifier 120 conducts and the charged commutating capacitor 134 places a back bias voltage on the silicon control rectifier 118 so that the latter is returned to its nonconducting state. Silicon control rectifier 120 now conducts a current through pump winding 30, and the commutating capacitor 134 is charged in the opposite direction. During the next voltage pulse from the oscillator 106, the commutating capacitor 134 places a back bias voltage on the silicon control rectifier 120 to return the latter to its nonconducting state and silicon control rectifier 118 again conducts. Thus, the output pulses from the oscillator 106 cause alternate energizing of the pump windings 28 and 30 to reciprocate the pump piston 52 in the pump cylinder.

Taps are brought out of the pump windings 28 and 30 and connected to the bypass diodes 130 and 132 to aid in discharging the windings and thereby permit the use of lower voltage ratings for the silicon control rectifiers 118 and 120. An RC filter network 136, consisting of a capacitor 136*a* and a resistor 136*b*, is connected across the anode and cathode of each silicon control rectifier to suppress transient switching voltages which could damage the rectifiers. A switch 138 and a capacitor 140 are connected in shunt with the commutating capacitor 134 to permit the effective commutating capacitance, and, therefore, the silicon control rectifier hold-off time requirement, to be varied as the frequency is varied.

In lead 142, connecting one output terminal of the shunt voltage regulator 104 to the oscillator 106, is a jack 144. This jack is adapted to receive the plug on the end of a cable leading to a remote switch unit (not shown). When the plug is inserted in the jack 144, the latter is opened to break the energizing circuit for the oscillator 106 so that the latter remains inoperative until the remote switch unit is closed. In this way, the operation of the pump can be controlled from a remote location.

Indicated at 146 is a second jack which is connected in shunt with the oscillator pulse repetition rate potentiometer 106*b*. This jack is adapted to receive the plug on the end of a cable leading to a remote potentiometer unit (not shown). When the plug is inserted into the jack 146, the oscillator potentiometer 106*b* is removed from the oscillator circuit and the potentiometer in the remote potentiometer unit is inserted in the circuit so that the pulse repetition rate of the oscillator, and, therefore, the pumping rate of the pump, may be controlled from a remote location.

Numeral 148 denotes a manual-automatic switch which, when closed, shorts out the pulse repetition rate potentiometer 106*b* of the oscillator 106. The values of the oscillator resistor 106*a* and oscillator capacitor 106*c* are such that when the potentiometer 106*b* is thus shorted out, the pulse rate of the oscillator is extremely high. The mass of the pump piston is such that it cannot respond to this high frequency and, therefore, locks into a stationary position determined by which of the pump windings 28 or 30 is currently energized when the manual-automatic switch 148 is closed. The manual pump switches 110 and 112 may now be operated, as follows: When switch 110 is opened, it momentarily removes the gate signal from silicon control rectifier 118 and deenergizes the associated pump winding 28 so that the pump plunger moves in one direction. The piston now locks into a stationary position in the pump winding 30. When the manual pulse switch 112 is depressed, the gate signal is removed from the silicon control rectifier 120 which deenergizes the pump winding 30 resulting in movement of the piston into the pump winding 28. The pump piston then remains stationary in this position until the switch 110 is again depressed to repeat the cycle.

Batteries 150 and 152 are provided for emergency stand-by operation in the event of failure of the A.C. power supply to the A.C. input terminals 94 of the circuit. In the event of such failure, the coil 92*a* of the A.C. power failure relay 92 is deenergized and its switch contacts 92*b* and 92*c* close. Closure of relay contacts 92*b* connects the battery 150 to the oscillator 106 which is thereby energized in the same manner as it was energized by the shunt voltage regulator 104. Closure of relay contacts 92*c* connects the second battery 152 into the circuits of the silicon control rectifiers 118 and 120. Thus, when the A.C. power relay 92 is deenergized upon failure of the A.C. power supply, the batteries 150 and 152 are automatically connected into the circuit to continue operation of the pump. Switches 156 and 158 are connected in shunt with the A.C. power failure relay contacts 92*b* and 92*c* to permit selective operation of the circuit from either an A.C. power source or the batteries 150 and 152 as well as to allow charging of the batteries from the rectifier 124 while the unit is operating from an A.C. supply. An emergency stand-by switch 160 is connected in the battery leads, as shown. Stand-by switch 98, emergency stand-by switch 160, and the charging switches 156, 158 permit charging of the batteries 150, 152 from the rectifier 124 while the pump is inoperative. Terminals 162 are provided to afford a D.C. voltage check point.

The single-acting pump in FIG. 3 comprises a nonmagnetically permeable cylinder 200 closed at its ends by magnetically permeable plugs 202, each having a central fluid passage 204. Communicating with the left-hand

plug passage 204 is a fluid inlet line 206 and with the right-hand plug passage 204 a fluid discharge line 208.

Reciprocable within the cylinder between these plugs is a magnetically permeable piston 210. Piston 210 has a central through passage 212 in which is a check valve 214.

During left-hand travel of the piston 210 in the cylinder 200, fluid in the left-hand end of the cylinder flows through the piston passage 212 and past the check valve 214, which unseats during flow in this direction of piston travel, into the right-hand end of the cylinder. During subsequent right-hand travel of the piston, the check valve 214 closes so that fluid is expelled from the right-hand end of the pump cylinder through the discharge line 208. Simultaneously, fluid is drawn into the left-hand end of the cylinder through the inlet line 206.

The electromagnetic field structure 216 of the pump comprises three magnetically permeable bars 218, 220, and 222 located at the ends and center, respectively, of the pump cylinder 200. These bars are attached to a magnetically permeable crossbar 224. Pump winding 226 is mounted on the left-hand bar 218 and the other pump winding 228 is mounted on the right-hand bar 222.

The pump cylinder 200 could be permanently mounted in the magnetic field bars 218, 220, 222 by press fitting the cylinder in aligned bores in the bars. Preferably, however, the upper ends of the field bars terminate approximately at the center line of the cylinder and are cylindrically relieved to seat the cylinder, as shown. Magnetically permeable caps 230, hinged to the upper ends of the field bars 218, 220, and 222, fit over the cylinder and are secured to the field bars by releasable locks 232. Locks 232 can be released to permit hinging of the caps 230 to a position wherein the cylinder 200 can be removed from the magnetic field structure 216.

One cylinder and piston assembly can thereby be replaced by another. In this way, pump cylinders of various displacements (the pump displacement may be varied by varying the length of the cylinder plugs 202 to change the piston stroke and/or varying the diameter of the cylinder bore) may be installed on the field structure. Also, the field structure may be used with cylinder and piston assemblies in several fluid systems containing different fluids. While the hinged caps 230 have been disclosed for locking the pump cylinder 200 to the magnetic field bars 218, 220, and 222, it has been found that such caps may be dispensed with and the magnetic attraction between the parts relied on to hold the cylinder firmly in position on the field structure.

In operation, the pump windings 226 and 228 are alternately energized by the circuit of FIG. 5, for example. The upper ends of the field bars 218, 220, 222 form poles P_1, P_2, P_3 located at the center and ends, respectively, of the cylinder. When winding 226 is energized, an electromagnetic field is created between the center pole P_1 and the left-hand pole P_2, magnetic lines of force of which extend between the left-hand cylinder plug 202 and the piston 210, as in the previous form of the invention. The piston is thereby moved to the left in the cylinder 200 by the field. Similarly, when pump winding 228 is energized, an electromagnetic field is created between the center pole P_1 and the right-hand pole P_3 and the piston is moved to the right in the cylinder. Thus, when the windings are alternately energized by the circuit of FIG. 5, fluid is pumped from the pump inlet line 206 to the pump outlet line 208.

One advantage of the pump configuration of FIG. 3 is that the magnetic field bars 218, 220, 222 may be made quite long and the pump windings 226 and 228 may be located adjacent the lower ends of the bars so that a considerable spacing will exist between the pump cylinder 200 and the pump windings. In this way, the windings are effectively shielded from the heat radiated and conducted from the cylinder when pumping high temperature fluids, such as molten metal. Such high temperature fluids, of course, will require the pump parts to be made of a metal capable of withstanding the high temperatures involved. The maximum operating temperature of the pump is obviously governed by the Curie point of the material used in the electromagnetic circuit of the pump.

The present pump may be made to operate effectively up to 500° F. without any cooling or shielding in addition to that achieved by making the magnetic field bars quite long. If necessary, the operating temperature of the pump can be increased to the maximum by providing the field structure 216 with passages 234 through which a suitable liquid coolant may be circulated for cooling the pump windings 226, 228 and other parts of the field structure.

The pump diagrammatically illustrated in FIG. 6 comprises a pump 10*a*, proper, generally like that illustrated in FIG. 1. In FIG. 6, however, the check valves 74, 76, 84, 86 of the pump of FIG. 1 are replaced by spring-closed, electromagnetically opened solenoid valves 74*a*, 76*a*, 84*a*, 86*a*. The windings of valves 74*a* and 86*a* are connected in electrical circuit with pump winding 30*a* so as to be electromagnetically opened when this winding is energized. The valves are spring loaded to close when the winding is deenergized. Similarly, the windings of valves 76*a* and 84*a* are connected in electrical circuit with pump winding 28*a* so as to be electromagnetically opened when the latter winding is energized. The valves are spring loaded to close upon deenergizing of the winding.

In this form of the invention, the pump valves are electromagnetically operated in synchronism with movement of the pump piston (not shown) in its cylinder (not shown) to effect flow of the fluid being pumped from the pump inlet to the pump outlet.

It is obvious that since the various pumps of this invention are devoid of shaft seals and may be completely hermetically sealed, they are uniquely adapted to pumping molten metals as well as corrosive or noncorrosive materials without fear of leakage, seal deterioration, or contamination by external atmosphere or seal or bearing lubricant.

Clearly, then, the invention is fully capable of attaining the objects and advantages preliminarily set forth.

What is claimed is:

1. In combination, a nonmagnetically permeable cylinder; an electromagnetic field structure on the outside of said cylinder including three poles located at the center and ends, respectively, of said cylinder, a first winding to be energized for creating a first electromagnetic field between said center pole and one end pole, and a second winding to be energized for creating a second electromagnetic field between said center pole and the other end pole; a magnetically permeable plunger reciprocable in said cylinder between said end poles, said center pole being disposed in close proximity to said plunger, whereby when said first winding is energized, magnetic lines of force of said first field extend between said one end pole and said plunger and the latter is moved toward said one end pole, and when said second winding is energized, magnetic lines of force of said second field extend between said other end pole and said plunger and the latter is moved toward said other end pole; and an energizing circuit for said windings comprising silicon control rectifiers in circuit with said windngs, respectively, means to impress a voltage across said windings and rectifiers, an electrical oscillator for generating periodic electrical impulses, and circuit means for applying the output of said oscillator to the gates of said rectifiers, whereby the latter are periodically triggered to allow current flow through said windings, including a commutating capacitor connected across said windings for causing said rectifiers to be triggered alternately by said impulses.

2. The subject matter of claim 1, wherein said oscillator

includes means for varying the frequency of said impulses whereby to vary the rate of reciprocation of said plunger in said cylinder.

3. The subject matter of claim 1, wherein said oscillator includes a potentiometer for varying the frequency of said impulses, whereby to vary the rate of reciprocation of said plunger in said cylinder, and means for connecting a remote control potentiometer in shunt with said first-mentioned potentiometer and electrically isolating the latter from said circuit.

4. The subject matter of claim 1, including means for connecting a remote control switch unit in circuit with said oscillator for selectively activating and deactivating the latter from a remote position.

5. The subject matter of claim 1, wherein said circuit includes further a pair of terminals for connection to an A.C. power source, a first rectifier in circuit with said terminals and said oscillator, a second rectifier in circuit with said terminals and said silicon control rectifiers, battery means, circuit means connecting said battery means and said oscillator and silicon control rectifiers in parallel with said rectifier means, and relay means for controlling current flow in said circuit means in response to the current flow to said terminals.

6. The subject matter of claim 1, wherein said circuit means includes further means for selectively causing said oscillator to supply high frequency impulses to said silicon control rectifiers, whereby said plunger remains stationary in said cylinder, and switch means for selectively deenergizing each winding to effect manual control of said plunger.

7. A fluid pump comprising a nonmagnetically permeable cylinder; an electromagnetic field structure on the outside of said cylinder including three poles located at the center and ends, respectively, of said cylinder, a first winding to be energized for creating a first electromagnetic field between said center pole and one end pole, and a second winding to be energized for creating a second electromagnetic field between said center pole and the other end pole; a magnetically permeable piston reciprocable in said cylinder between said end poles, said center pole being disposed in close proximity to said piston, whereby when said first winding is energized, magnetic lines of force of said first field extend between said one end pole and said piston and the latter is moved toward said one end pole, and when said second winding is energized, magnetic lines of force of said second field extend between said other end pole and said piston and the latter is moved toward said other end pole, said pump having a fluid inlet and fluid outlet; valve means between said inlet and outlet for effecting flow of fluid from the inlet to the outlet during reciprocation of said piston in said cylinder by alternate energizing of said windings; and an energizing circuit for said windings comprising silicon control rectifiers in circuit with said windings, respectively, means to impress a voltage across said windings and rectifiers, a semiconductor oscillator for generating periodic electrical impulses, and circuit means for applying the output of said oscillator to said rectifiers, whereby the latter are periodically triggered to allow current flow through said windings, including a commutating capacitor connected across said rectifiers for causing said rectifiers to be triggered alternately by said impulses.

8. A fluid pump comprising a nonmagnetically permeable cylinder; an electromagnetic field structure on the outside of said cylinder including three poles located at the center and ends, respectively, of said cylinder, a first winding to be energized for creating a first electromagnetic field between said center pole and one end pole, and a second winding to be energized for creating a second electromagnetic field between said center pole and the other end pole; a magnetically permeable piston reciprocable in said cylinder between said end poles, said center pole being disposed in close proximity to said piston, whereby when said first winding is energized, magnetic lines of force of said first field extend between said one end pole and said piston and the latter is moved toward said one end pole, and when said second winding is energized, magnetic lines of force of said second field extend between said other end pole and said piston and the latter is moved toward said other end pole, said pump having a fluid inlet and a fluid outlet; valve means between said inlet and outlet for effecting flow of fluid from the inlet to the outlet during reciprocation of said piston in said cylinder by alternate energizing of said windings; and an energizing circuit for said windings comprising silicon control rectifiers in circuit with said windings, respectively, means to impress a voltage across said windings and rectifiers, a unijunction transistor oscillator for generating periodic electrical impulses, and circuit means for applying the output of said oscillator to said rectifiers, whereby the latter are periodically triggered to allow current flow through said windings, including a commutating capacitor connected across said rectifiers for causing said rectifiers to be triggered alternately by said impulses.

References Cited in the file of this patent

UNITED STATES PATENTS

461,295	Van Depoele	Oct. 13, 1891
1,684,468	Brown	Sept. 18, 1928
2,686,280	Strong et al.	Aug. 10, 1954
2,688,930	De Moss	Sept. 14, 1954
2,690,128	Basilewsky	Sept. 28, 1954
2,713,311	White	July 19, 1955
2,761,392	Parker	Sept. 4, 1956
2,833,220	Robinson et al.	May 6, 1958
2,862,450	McDonnell	Dec. 2, 1958