No. 739,396. PATENTED SEPT. 22, 1903.

G. H. DAVIS.

ELECTRIC ATTACHMENT FOR PIANOS.

APPLICATION FILED MAY 9, 1901.

NO MODEL. 5 SHEETS—SHEET 1.

Fig. 1.

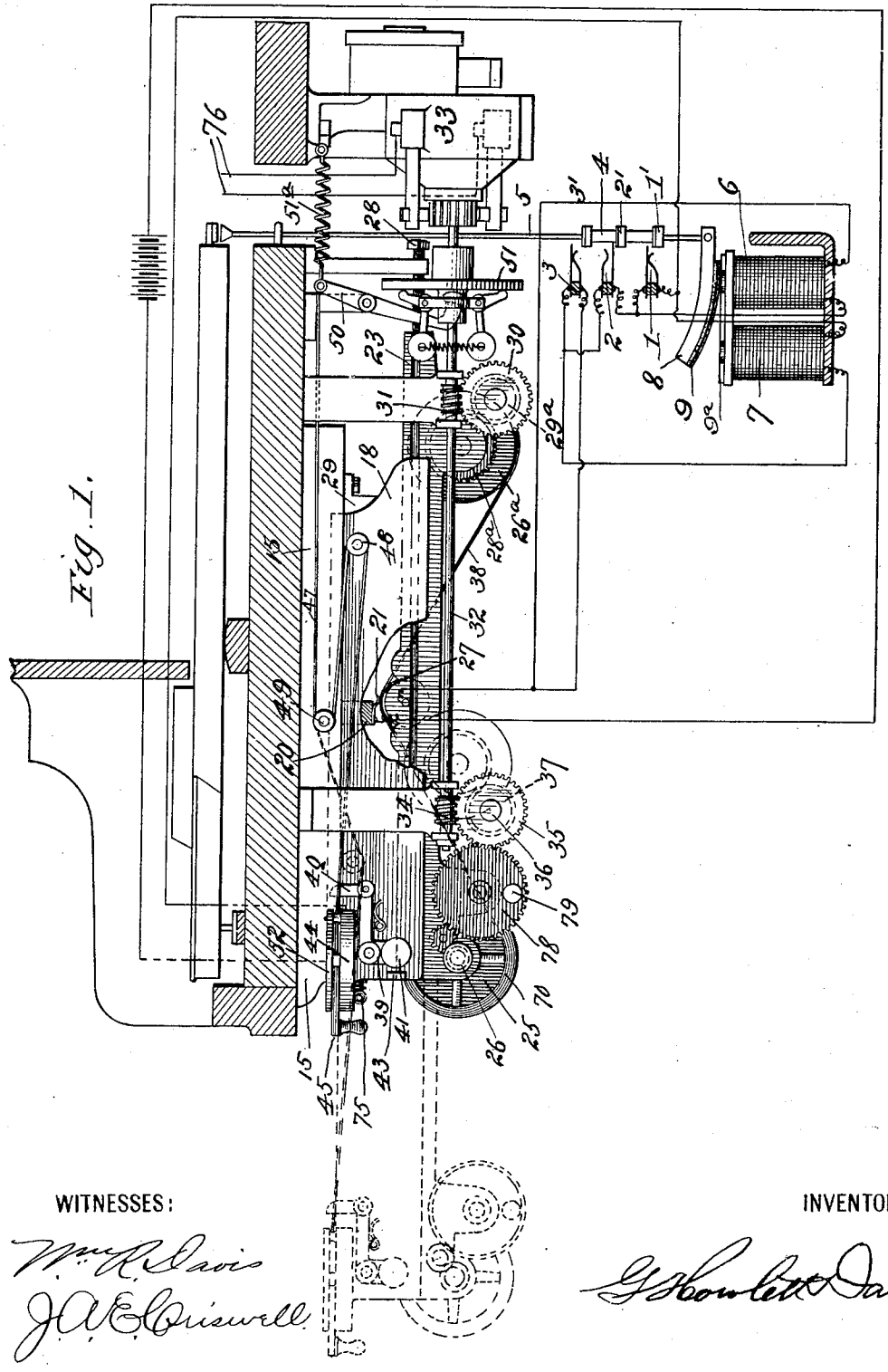

WITNESSES:

W. R. Davis

J. A. E. Criswell

INVENTOR

G. Howlett Davis

THE NORRIS PETERS CO., PHOTO-LITHO., WASHINGTON, D. C.

No. 739,396. PATENTED SEPT. 22, 1903.

G. H. DAVIS.

ELECTRIC ATTACHMENT FOR PIANOS.

APPLICATION FILED MAY 9, 1901.

NO MODEL. 5 SHEETS—SHEET 2.

Fig. 1a

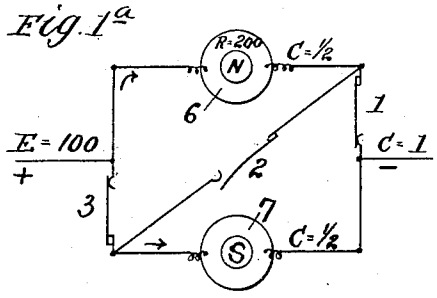

Fig. 2.

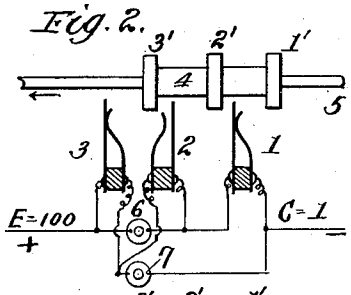

Fig. 3.

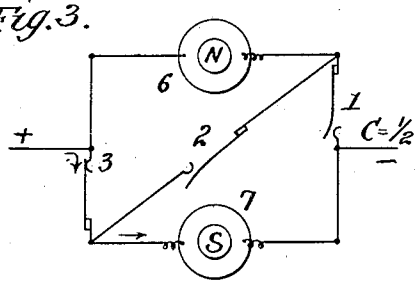

Fig. 4.

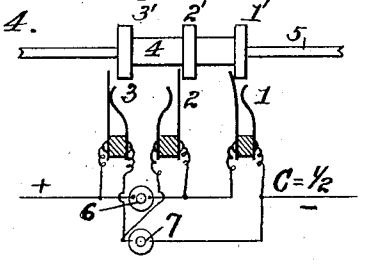

Fig. 5.

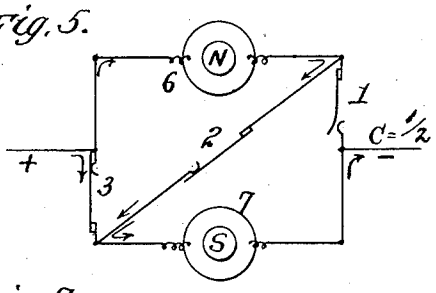

Fig. 6.

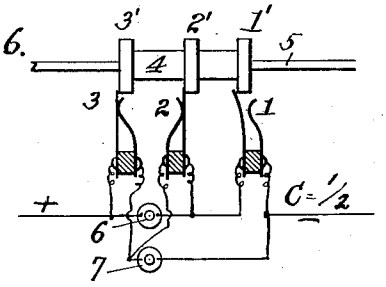

Fig. 7.

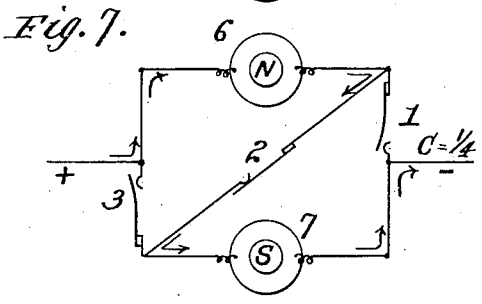

Fig. 8.

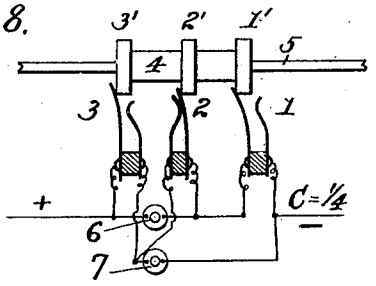

WITNESSES:

W. R. Davis

J. V. C. Criswell

INVENTOR

G. Howlett Davis

No. 739,396. PATENTED SEPT. 22, 1903.

G. H. DAVIS.

ELECTRIC ATTACHMENT FOR PIANOS.

APPLICATION FILED MAY 9, 1901.

NO MODEL. 5 SHEETS—SHEET 3.

Fig. 9.

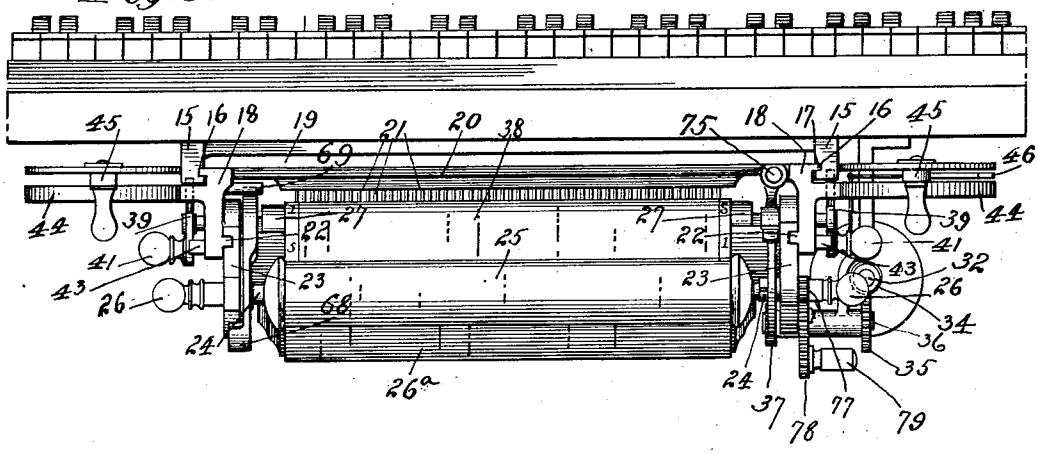

Fig. 10.

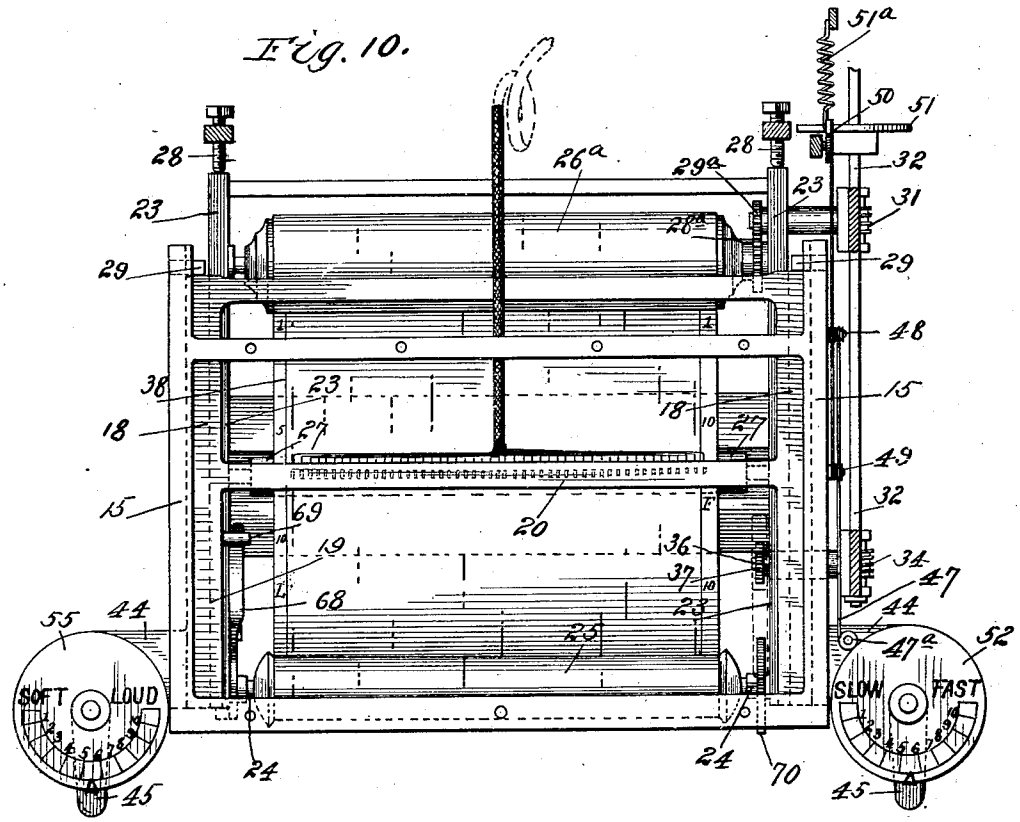

WITNESSES:

W. R. Davis

J. A. C. Cuswell.

INVENTOR

G. Howlett Davis

THE NORRIS PETERS CO., PHOTO-LITHO., WASHINGTON, D. C.

No. 739,396. PATENTED SEPT. 22, 1903.

G. H. DAVIS.

ELECTRIC ATTACHMENT FOR PIANOS.

APPLICATION FILED MAY 9, 1901.

NO MODEL. 5 SHEETS—SHEET 4.

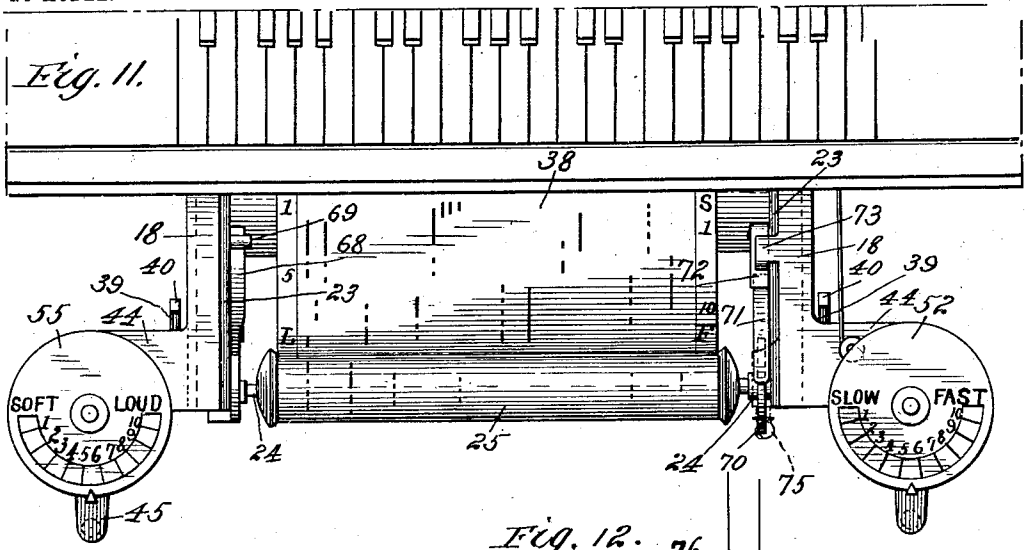

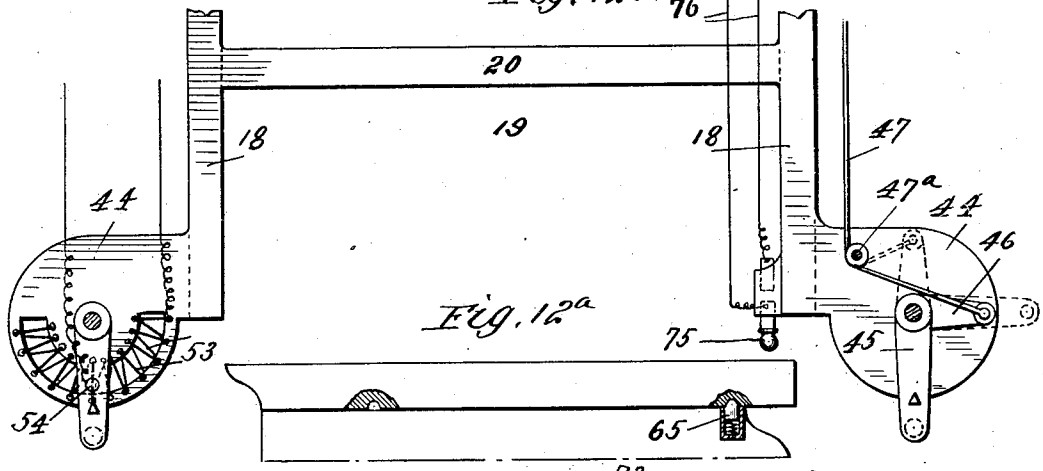

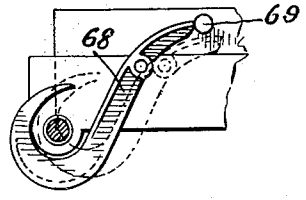

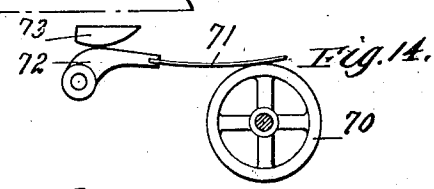

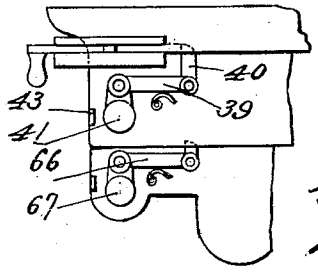

WITNESSES:

Wm. R. Davis

J. A. E. Criswell

INVENTOR

G. Howlett Davis

THE NORRIS PETERS CO., PHOTO-LITHO., WASHINGTON, D. C.

No. 739,396. PATENTED SEPT. 22, 1903.

G. H. DAVIS.

ELECTRIC ATTACHMENT FOR PIANOS.

APPLICATION FILED MAY 9, 1901.

NO MODEL. 5 SHEETS—SHEET 5.

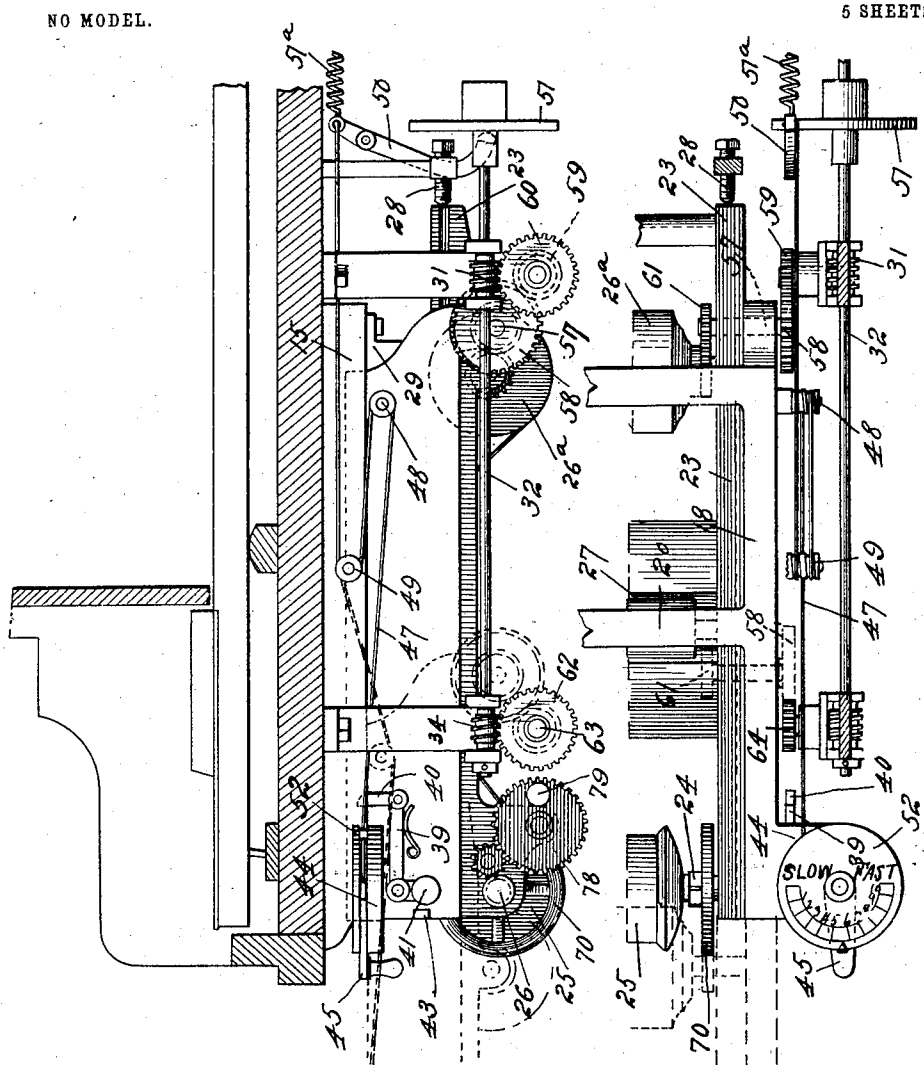

Fig. 16.

Fig. 17.

WITNESSES:

M. R. Davis

J. W. C. Criswell

INVENTOR

G. Howard Davis

THE NORRIS PETERS CO., PHOTO-LITHO., WASHINGTON, D. C.

No. 739,396. Patented September 22, 1903.

UNITED STATES PATENT OFFICE.

GEORGE HOWLETT DAVIS, OF ORANGE, NEW JERSEY.

ELECTRIC ATTACHMENT FOR PIANOS.

SPECIFICATION forming part of Letters Patent No. 739,396, dated September 22, 1903.

Application filed May 9, 1901. Serial No. 59,350. (No model.)

To all whom it may concern:

Be it known that I, GEORGE HOWLETT DAVIS, a citizen of the United States, and a resident of Orange, in the county of Essex and State of New Jersey, have invented certain new and useful Improvements in Electric Attachments for Pianos, of which the following is a specification.

This invention relates to electric attachments for pianos and includes the improvements in key-operating mechanism shown in application Serial No. 39,150, filed December 8, 1900, and improvements on the sliding music-holder shown in Patent No. 606,279, dated June 28, 1898.

The object of the improvements in the key-operating mechanism is to provide for varying the resistance of an ordinary two-helix magnet by means adapted to be operated by the armature thereof to change the direction of flow of current through the magnet to increase the resistance, whereby current will be saved and sparking between the selector-fingers and the contact-bar and the consequent charring of perforated music-sheet will be prevented.

The object of the improvements in the sliding music-sheet holder is to provide means whereby the music-sheet may be wound on the take-up roll and the key-operating mechanism actuated when the holder is shoved in under the keyboard of the piano and also when it is drawn out in front of the keyboard to bring into view the music-sheet, so that the expression-symbols which are marked thereon may be readily followed.

Another object of this part of the invention is to provide the expression and tempo levers each with a suitable scale or dial plate indicating the positions for said levers and to provide the adjacent longitudinal margins of the music-sheet with corresponding scale marks or symbols to indicate the point in the musical composition at which the levers are to be manipulated and to what scale-marks they are to be adjusted.

In the drawings, Figure 1 is a vertical sectional view of a piano-keyboard, showing the improvements in position; Figs. 1ª, 3, 5, and 7, diagrammatical views especially designed to illustrate the four different phases of resistance that the two helices of any ordinary magnet may assume when controlled by the means shown herein. Figs. 2, 4, 6, and 8 are views of the circuit-changing means in the four different positions indicated in Figs. 1ª, 3, 5, and 7; Fig. 9, a front view of the sliding music-holder attached to a keyboard; Fig. 10, a plan view thereof removed from the keyboard; Fig. 11, a plan view of a part of a keyboard, showing the music-holder drawn out; Fig. 12, a plan of the front portion of the selector-finger-carrying frame; Fig. 12ª, a detail showing the latch for securing the selector-finger frame to the stationary frame; Fig. 13, a detail of a pivoted stop carried by the roll-holder; Fig. 14, a detail of the delivery-roll brake; Fig. 15, a detail of the latches for securing the two parts of the music-holder together, and Figs. 16 and 17 a vertical sectional view and partial plan view of a slightly-different form of music-holder.

In operating electrically-actuated musical instruments in which a perforated paper music-sheet is passed between a contact-roller and a series of contact-fingers to make and break the circuits which actuate the key-operating mechanism it is usual to employ a low-voltage current such as that generated by a few cells of storage or primary batteries. This current is not sufficient to cause a spark at the contact-fingers great enough to char the perforated paper music-sheet; but where the full current is permitted to pass freely through the magnets every time the circuits are completed the batteries are soon exhausted. The purpose of this invention when used with such a low-voltage current is to reduce the amount of current passing through the magnets and to thereby prolong the life of the batteries. Where a high-voltage current, such as the ordinary one-hundred-and-ten-volt lighting-circuit, is employed to operate a musical instrument of the class described, it is absolutely necessary that the sparking at the contact-fingers be reduced in order that the paper music-sheet will not be charred and destroyed. In this instance the invention reduces the amount of current passing through the magnets before the circuit is broken, and thereby prevents injurious sparking. Of course in this latter instance current is saved; but when a high-voltage current is employed such saving is not of importance.

Like characters of reference indicate corresponding parts throughout the several views.

Numeral 1 indicates what may be termed "first" contact; 2, the "second" contact, and 3 the "third" contact. Likewise 1′, 2′, and 3′ indicate coöperating collars or projections upon a sleeve 4, secured to a rod 5, which operates a piano-key and is connected to and moves with the rocker-armature 8 of the magnet, which is formed with two helices or windings. One helix-winding (N) of the magnet is indicated by 6 and the other (S) by 7. One terminal of this magnet-circuit is connected to the contact-bar and the other terminal is connected to a key-selecting finger, which is adapted to engage the contact-bar. We will assume that each of the windings 6 and 7 has a resistance of two hundred ohms (R) and that the line has an electromotive force (E) of one hundred volts. Now as the current (C) is equal to the electromotive force divided by the resistance, expressed by $C=\frac{E}{R}$, then when the contact-collars 1′ 2′ 3′ are in their normal positions the current flows in through contacts 1 and 3 in multiple through their respective windings 6 and 7, and the one-half ampere of current thus passing through each winding causes a powerful attraction of the armature, to which the rod 5 is supposed to be connected at the point of its greatest movement, as shown in Fig. 1. Now after the armature and rod 5 have made half their movement, as shown in Figs. 3 and 4, then contact-collar 1′ has opened contact 1, as clearly shown in Fig. 4, and opens the current through magnet 6, thus leaving only one-half ampere to pass to line through winding 7 only. When the rod 5 has advanced, say, one-eighth inch farther, as shown in Figs. 5 and 6, contact-button 2′ closes contact 2 and the current, as more clearly shown in Fig. 5, passes in series through windings 6 and 7, allowing momentarily one-half ampere to pass to the line. A final movement of the rod of one-eighth inch farther and contact-button 3′ opens contact 3, thus throwing the windings into regular and direct series and allowing a passage of only one-fourth ampere to the line, as clearly shown by Figs. 7 and 8. So long as the current remains closed, which is regulated by the length of perforation in the music-sheet, then only one-fourth of the original or initial current can pass, and therefore when an imperforate portion of the thin sheet again intervenes between the selector-fingers and the contact-bar the breakage of the reduced current produces but a slight spark, whereas if the full current or one ampere was flowing at the time the paper if thin would be charred or cut to an extent sufficient to mar the note struck and to run one perforation into another if the two perforations were close together. All of these changes take place during the infinitesimally short period of time that an actively-energized magnet takes to move its armature at its free end the distance of one-half inch. The rocker-armature 8 has a felt facing 9, which works on a bar 9^a, which is flush with the tops of the magnet-poles to avoid all noise of the armature contacting with the poles. When the circuit is completed through the contact-fingers and the contact-bar, a current momentarily passes through both windings 6 and 7, as will be ascertained by carefully tracing up the circuits, and the movement of the armature and rod 5 effects the change in the circuit, as heretofore described. With this improvement it is possible to get a sufficient blow to strike a piano-key properly with helics only one-half inch in diameter.

It is an important point to be noted that in all other known means for reducing sparking far more wire is necessary to effect a given resistance than is required in cases where the present invention is applied, and as this invention is applicable to every possible form of electromagnet having two or more windings or helices the monetary saving which this invention effects is only secondary to the saving of current and sparking.

In order to make clear the economy of construction above claimed, it is only necessary to take the form of magnet shown in Fig. 1 as an example and assume, as before, that each of its helices is wound to a resistance of two hundred ohms and that four hundred ohms is in circuit at time of breaking contact by the imperforate portion of the thin paper music-sheet and that the initial flow of current should be one ampere in order to actuate a piano-key, which assumptions have been found to be true and real in practice. Now under any other method of producing the same initial and final flow of current an extra resistance of at least two hundred ohms is necessary either in the form of an external resistance or as an added resistance to the windings, and in either case the added resistance is dead after the initial movement, whereas with the present invention applied to an ordinary magnet the windings are not dead for any appreciable period of time. In automatically-operated musical instruments of the class described there are generally either fifty-eight or sixty-five magnets employed, and to obviate the employment of two hundred ohms on each magnet is a monetary saving of fully twelve dollars upon each instrument.

The rocker-armature 8 (shown in Fig. 1 of the drawings) is of special importance and advantage when used in the manner described to actuate the keys of a piano, since its action is practically noiseless, there being no hammering of the armature on its cores, as is the case with the ordinary pivoted armature. Furthermore, the peculiar rocking motion imparted to the armature through the energization of the magnets causes the piano-keys to be moved in a manner very closely resembling the action or touch of the human hand.

To the under side of the keyboard of the piano is secured a rectangular open supporting-frame 15, whose parallel sides extend rearward, its front bar being parallel with the front edge of the keyboard and nearly flush therewith. The side bars of this frame are grooved on their inner sides near their lower edges to form the horizontal guideways 16 in which fit the outward-turned ribs or flanges 17, formed on the upper edges of the sides 18 of the sliding selector-finger-supporting frame 19, which forms the upper member of a two-part music-holder. Connecting the sides 18 of this frame about midway their ends is a transverse bar 20, which carries the selector-fingers 21, which are insulated from each other and from the bar. On the inner side near the lower edges of each of the sides 18 of this frame is formed an inward-extending supporting-way 22, which fits in a horizontal groove formed in the outer side of each of the side bars 23 of the roll-holder frame which forms the lower member of the music-holder, said grooves being near the upper edges of said sides. Journaled in each of the sides of the roll-holder frame near the forward end thereof is a short stub-shaft 24, whose inner end is recessed to receive the adjacent end of the shaft of the music-sheet delivery-roll 25. The outer ends of these shafts 24 are formed into handles 26, which are to be grasped when it is desired to slide the roll-holder in and out on the selector-finger frame. Near the rear end of the roll-holder frame is journaled the take-up roll 26^a, and at about the middle of the frame is mounted the contact-roller 27. Adjustable stops 28 are secured to the bottom of the keyboard and limit the inward movement of the roll-holder, and stops 29 are secured to the supporting-frame to limit the inward movement of the selector-finger frame.

A small gear 28^a is secured to the shaft of the take-up roll, and meshing therewith when the roll-holder is in its innermost position is a gear 29^a, which is mounted on a shaft supported by a bracket from the bottom of the keyboard. On the outer end of this shaft is mounted a worm-wheel 30, which is engaged by a worm 31, secured on a horizontal shaft 32, which shaft is parallel with the sides of the music-holder and is rotated by the motor 33. Near its forward end this shaft is provided with a second worm 34, which meshes with a worm-gear 35, secured on the outer end of a short transverse shaft 36. This shaft is suitably supported from the keyboard, and on its inner end is a gear 37, similar in size to the gear 29^a. When the motor is in operation, the take-up roll is rotated in the proper direction to draw the music-sheet 38 or other key-selecting medium between the selector-fingers and the contact-bar. By drawing out the music-holder until the gear 28^a of the take-up roll meshes with the gear 37 the take-up roll will be rotated through the worm 34 and the gears driven thereby.

At the forward end of each of the side bars 18 of the frame 19 is pivoted an angle-lever 39, one arm of which extends rearward and carries an upward-extending latch 40, which when the said frame is in its innermost position engages in a recess in the under side of the side bar of the supporting-frame 15. A handle 41 is secured to the depending arm of the angle-lever and is adapted to be grasped when it is desired to draw out the selector-finger frame. A suitable spring is provided to yieldingly maintain the latch in engagement with the frame 15. It will be noted that when the handles 41 are pulled forward the latches 40 will be released and the frame 19 permitted to slide on the frame 15. A stop 43 is formed on the frame 19 to limit the forward movement of the handle. It will thus be seen that the roll-holder may be quickly moved in or out without disturbing the selector-finger frame, the latches 40 holding this latter frame stationary while the roll-holder is being moved. At their forward ends the side bars 18 of the selector-finger frame are each formed with a lateral horizontal extension 44 substantially circular in plan view. In the center of this extension is pivoted a lever 45, the one on the right-hand side being the tempo-lever and the other the expression-lever. The tempo-lever is formed with a lateral arm 46, to the outer end of which is secured a cord or wire 47, which passes around a small pulley 47^a, secured on the extension 44, and then around a double-grooved pulley 48 on the side bar 18 near the rear end thereof and then around a similar pulley 49 on the stationary frame 15, the distance between the centers of these two pulleys 48 and 49 being equal to one-half the movement of the frame 19 for a purpose hereinafter set forth. From the pulley 49 the cord passes rearward and is connected to the upper end of a pivoted brake-lever 50, whose lower end engages a brake-disk 51, mounted on the motor-shaft 32. A spring 51^a normally holds the brake-lever free of the brake-disk.

On top of the extensions 44 above the tempo-lever is secured a dial-disk 52, which is marked "Slow" at the left-hand side and "Fast" at the right-hand side, the space between these two words being divided into ten divisions, which are numbered from "1" to "10," beginning at the division nearest the word "Slow." The lever is provided with an index-finger which may be brought into register with any of the divisions on the dial. By moving the tempo-lever the speed of the music-sheet may be regulated as desired. The extension 44, on which the expression-lever is pivoted, is formed with a semicircular slot near its forward edge, and laced across this slot is a suitable resistance 53, to which is connected one terminal of the circuit in which are the key-operating magnets. The other terminal of this circuit is connected to a contact device 54, carried by the lever and adapted to engage the resistance 53. It

will be thus seen that by moving the expression-lever in the proper direction the piano-keys will be operated to produce loud or soft notes, as desired. Above the expression-lever is mounted a dial 55, on which are marked the words "Soft" and "Loud." The space between these words is divided into ten parts, which are numbered from "1" to "10," beginning at the division nearest the word "Soft." By moving the lever toward the word "Loud" the resistance is cut out, and in the reverse direction the resistance is cut in to soften the blow of the piano-key.

The music-sheet 38 is provided with marginal numerals or symbols which correspond to the numerals or other symbols on the adjacent dial, said marginal numerals indicating the position in which the lever should be when that part of the music-sheet is passing under the contact-fingers. The marginal symbols on the right-hand margin govern the position of the right-hand or tempo lever, while the symbols on the left-hand margin govern the adjacent expression-lever. Thus when the music-holder is drawn out to the position shown in Fig. 11 and the take-up roller is being rotated through the forward worm and the connected gears the music-sheet may be watched and the levers 45 moved according to the indicating-symbols on the adjacent margins of the music-sheet.

It will be noted that when the music-holder is shoved in under the keyboard, as shown in Fig. 1, the expression-levers may be manipulated and the symbols on the music-sheet may be seen, but not to so great an advantage as when the music-holder is drawn out. It will also be noted that by the arrangement of the cord 47 and the pulleys 48 and 49 a flexible connection is provided between the brake and the tempo-lever which may be readily operated while the music-holder is in either its innermost or its outermost position.

In Figs. 16 and 17 a slightly-different arrangement of the means for driving the take-up roll is shown. In this form the rear end of one of the side bars is formed with a depending lug, in which a short shaft 57 is mounted. On the outer end of this shaft is secured a large gear 58, which meshes with a gear 59 on the inner end of a short shaft which carries a worm-gear 60, this latter gear engaging the rear worm on the shaft 32. The take-up-roll shaft is provided with a gear which is on the forward side of and meshes with a gear 61 on the inner end of the shaft 57. The forward worm on the shaft 32 engages a worm-gear 62 on a short shaft 63. On the inner end of this shaft is a gear 64, similar to gear 59. When the music-holder is moved forward, the gear 58 meshes with the gear 64, as shown in dotted lines in Figs. 16 and 17. When it is desired to further draw out the roll-holder to enable the operator to readily connect a new sheet of music to the take-up roll, it may be readily done, as the gear connecting the take-up roll to the driving-gear is on the forward side of said gear and may be readily drawn away from it, as shown in dotted lines in Figs. 16 and 17.

To yieldingly latch the selector-finger frame in its inner and also in its outer positions, a spring-latch 65 is secured to one of the side bars thereof near its rear end, and recesses are formed in the bottom of the adjacent side bar of the stationary frame, one near the inner end and one near the outer end, as shown in Fig. 12ª. This spring-latch snaps into one of these recesses when the frame 19 is in its corresponding position, and it is so shaped that while it holds the frame against accidental displacement a quick pull will cause it to be released from the recess in which it is engaged.

To latch the roll-holder to the selector-finger frame, a latch-lever 66 is secured to each one of the side bars thereof and engages the adjacent bar of the frame 19. When it is desired to separate the two members of the music-holder, the handles 67, carried by the latch-levers 66, are grasped and pulled forward. In order that the gear on the take-up roll shall not be forced against its driving-gear when the roll-holder is shoved inward, a pivoted stop 68 is mounted on the roll-holder near the forward end thereof and is adapted to engage a stop 69 on the frame 19 just before the gear on the roll-holder shaft engages its driving-gear. The forward end of the latch is then raised to release the rear end thereof from the stop, and the frame may then be forced to position. To hold the delivery-roll from unwinding too freely, a brake is provided. This brake consists of a brake-wheel 70, mounted on the shaft of the delivery-roll, on the periphery of which bears a flat spring 71, whose rear end is secured in a cam-lever 72, whose upper edge engages a cam 73, carried by the selector-finger frame, when the two parts of the music-holder are adjusted to cause the selector-fingers and the contact-bar to register.

The motor for moving the music-sheet is set in motion by the push-button 75, Fig. 12, carried on the front of the selector-finger frame and adapted to make and break the motor-circuit 76. The wires from the selector-fingers are collected in a cable, as shown in Fig. 10, and the cable is given one or two coils to provide sufficient slack to permit the frame to slide back and forth without disturbing the connections between the fingers and their key-actuating magnets. In order that the music-sheet may be quickly rewound on the delivery-roll, one of the stub-shafts 24 is provided with a small gear 77, and connected to this gear is a train of gears 78, the driving-gear of which carries a suitable crank 79 for rotating it.

Having thus described my invention, what I claim as new, and desire to secure by Letters Patent, is—

1. In an electrically-actuated key-operating mechanism for musical instruments, the

combination with the key to be operated, of two contacts, a key-selecting medium, means for moving the key-selecting medium between said contacts, an electromagnet having a plurality of helices in circuit with said contacts, an armature provided with a curved face having a rocking movement over the poles of the magnet to actuate said key during said rocking movement, and means simultaneously operated to change the flow of current through the magnet whereby the resistance of said magnet is varied.

2. In an electrically-actuated key-operating mechanism for pianos, the combination with a piano-key, of two contacts, a key-selecting medium, means for moving said key-selecting medium to cause said contacts to engage each other, an electromagnet having a plurality of helices in circuit with said contacts, a rocker-armature actuated by said magnet and having a connection with the key, and means simultaneously operated to change the flow of current through the magnet whereby the resistance of said magnet is varied.

3. In electrically-actuated key-operating mechanism for pianos or similar musical instruments, the combination of two contacts, means for moving a key-selecting medium between said contacts, an electromagnet having a plurality of helices in circuit with said contacts, a rocker-armature controlled by the magnet, switches operated by the armature and controlling the circuits through the helices to vary the resistance of the magnet, and key-operating means actuated by said armature.

4. In an electrically-actuated key-operating mechanism for pianos, the combination with a key to be operated, of a pair of contacts, means for moving a key-selecting medium to cause said contacts to make and break contact with each other, an electromagnet in circuit with said contacts, a rocker-armature actuated by said electromagnet and constructed to operate the key, a plurality of circuits through the magnet, and means controlled by the magnet for making and breaking said circuit.

5. In an electrically-actuated key-selecting mechanism for pianos, the combination with a key to be operated, of a pair of contacts, means for moving a key-selecting medium to cause said contacts to make and break circuit with each other, an electromagnet having a plurality of helices in circuit with said contacts, a rocker-armature actuated by said electromagnet and having a connection with the key, a plurality of contacts for controlling the circuits through the helices of the magnet, and means controlled by the magnet for making and breaking said circuits, whereby the resistance of the magnet is varied.

6. In an electrically-actuated key-operating mechanism for pianos, the combination with a key to be operated, of a pair of contacts, an electromagnet having a plurality of helices in circuit with said contacts, means for moving a key-selecting medium to cause said contacts to make and break contact with each other, a rocking armature coöperating with the magnet, a key-operating mechanism actuated by the said armature, and means to change the flow of current through the magnet to increase the resistance of the magnet.

7. In an electrically-actuated key-operating mechanism for pianos, the combination with a key to be operated, of a pair of contacts, an electromagnet having a plurality of helices in circuit with said contacts, a key-selecting medium, means for drawing said medium between the contacts, a rocker-armature coöperating with the magnet, a key-operating mechanism actuated by the armature, and means controlled by the magnet-circuit for changing the flow of current through the magnet whereby the resistance of the magnet will be varied.

8. In an electrically-actuated key-operating mechanism for pianos, the combination with a key to be operated, of two contacts, means for drawing a perforated music-sheet between said contacts, an electromagnet having a plurality of helices in circuit with the contacts, a rocker-armature actuated by said magnet and having a connection with the piano-key, and means for changing the flow of current through the magnet-helices from multiple to series to increase the resistance.

9. In an electrically-actuated key-operating mechanism for pianos, the combination with a key to be operated, of two contacts, means for drawing a perforated music-sheet between said contacts, an electromagnet having a plurality of helices in circuit with the contacts, a rocking armature operated by said magnet and arranged to operate the said key, and means also operated by said armature for changing the flow of current through the magnet from multiple to series to increase the resistance.

10. In an electrically-actuated key-operating mechanism for pianos, the combination with the keys to be operated, of a contact-bar, a series of contact-fingers, means for drawing a perforated music-sheet between said bar and fingers, a series of electromagnets each having a plurality of helices each of said magnets being in circuit with a finger and the contact-bar, a rocking armature actuated by each magnet, a connection between each armature and one of the piano-keys, and means operating simultaneously with the key-operating means to change the flow of the circuit through the magnet to increase the resistance in the circuit.

11. In an electrically-actuated key-operating mechanism for pianos, the combination with the piano-keys, of a contact-bar, a series of contact-fingers, means for drawing a perforated music-sheet between said bar and fingers, a series of electromagnets each having a plurality of helices each of said magnets being in circuit with a finger and the con-

tact-bar, rocker-armatures operated by said magnets to operate the piano-keys, and means controlled by the magnet and operating simultaneously with the key-operating means to change the flow of the current through the magnet to increase the resistance of the magnet.

12. In an electrically-actuated key-operating mechanism for pianos, the combination with the piano-keys, of a contact-bar, a series of contact-fingers, a key-selecting medium, means for drawing the said medium between the bar and the fingers, a series of electromagnets each having a plurality of helices each of said magnets being in circuit with a finger and the contact-bar, rocker-armatures operated by said magnets to operate the piano-keys, and means operating simultaneously with the key-operating means to change the flow of the circuit through the magnet to increase the resistance in the circuit.

13. In an electrically-actuated key-operating mechanism for pianos, the combination of a music-holder, means for slidably supporting said music-holder, a delivery-roll and a take-up roll supported on said music-holder, a contact-bar and a series of key-selecting fingers carried by the music-holder, means for rotating the take-up roll when the music-holder is in its innermost position to wind the music-sheet on the take-up roll, and means to engage the take-up roll and rotate it in the same direction when the music-holder is drawn out.

14. In an electrically-actuated key-operating mechanism for pianos, the combination of a music-holder, means for slidably supporting said music-holder, a delivery-roll and a take-up roll supported on said music-holder, a contact-bar and a series of key-selecting fingers carried by the music-holder, means for rotating the take-up roll when the music-holder is in its innermost position to wind the music-sheet on the take-up roll, means to engage the take-up roll and rotate it in the same direction when the music-holder is drawn out, and a series of magnets controlled by the music-sheet to operate piano-keys, and means actuated by the magnet-armatures to change the flow of current through the magnets to vary the resistance of the magnets.

15. In an electrically-actuated key-operating mechanism for pianos, the combination of a music-holder formed of two members slidable upon each other, means for slidably supporting said music-holder, a series of key-selecting fingers carried by one of said members, a delivery-roll and a take-up roll carried by the other member, a contact-bar between these two rolls, and means for rotating the take-up roll.

16. In an electrically-actuated key-operating mechanism for pianos, the combination of a music-holder formed of two members slidable upon each other, means for slidably securing said holder to a piano-keyboard, a series of key-selecting fingers carried by one member, a delivery-roll and a take-up roll carried by the other member, a contact-bar between these two rolls, means for limiting the inward and outward movements of one of said members, means to connect the take-up roll with the driving means, and means for driving the take-up roll.

17. In an electrically-actuated key-operating mechanism for pianos, the combination of a music-holder formed of an upper and a lower member slidable upon each other, means for slidably connecting the upper member to a keyboard, means for limiting the inward and outward movement of the said upper member, a series of selector-fingers carried by one of said members, a delivery-roll and a take-up roll carried by the other member, a contact-bar between the two rolls, driving means for the take-up roll, and means for connecting the take-up roll to the driving means when the upper member is in either of its operative positions.

18. In an electrically-actuated key-operating mechanism for pianos, the combination of a music-holder formed of an upper and a lower member slidable upon each other, means for slidably connecting the upper member to a keyboard, means for locking said upper member to the keyboard in its inner and its outer positions, a series of selector-fingers carried by one member, a delivery-roll and a take-up roll carried by the other member, a contact-bar between the two rolls, driving means for the take-up roll, and means for connecting the driving means to the take-up roll when the upper member is locked in either its inner or its outer position.

19. In an electrically-actuated key-operating mechanism for pianos, the combination of a music-holder formed of an upper and a lower member slidable upon each other, means for slidably connecting the upper member to a keyboard, means for locking the upper member to the keyboard in its inner and its outer positions, a series of selector-fingers carried by one member, a delivery-roll and a take-up roll carried by the other member, a contact-bar between the two rolls, means for locking the two members together to hold the selector-fingers in register with the contact-bar, driving means for the take-up roll, and means for connecting the take-up roll to the driving means when the upper member is locked in either of its positions.

20. In an electrically-actuated key-operating mechanism for pianos, the combination of a music-holder formed of an upper and a lower member slidable upon each other, means for slidably connecting the upper member to the keyboard, means for limiting the inward and outward movement of the upper member, a series of selector-fingers carried by one member, a take-up roll and a delivery-roll carried by the other member, a contact-bar between the two rolls, means for locking the two members together to hold the selector-fingers in register with the contact-bar, driving means

for the take-up roll and means for connecting the take-up roll to the driving means when the upper member is in either its inner or its outer position.

21. In combination, a music-holder composed of two members, means for slidably supporting said members, a delivery-roll and a take-up roll carried by one of the members, a contact-bar and a series of key-selecting fingers carried by the other member, a handle carried by the music-holder and adapted to be grasped when the music-holder is to be drawn out, and a latch device connected to the handle and locking the music-holder to the keyboard, in its inner position and adapted to be released when the handle is drawn forward.

22. In combination, a music-holder formed of two members slidable upon each other, means for slidably supporting the upper member from a keyboard, means for locking said upper member to the keyboard, a series of selector-fingers carried by the upper member, a take-up roll and a delivery-roll carried by the lower member, a contact-bar carried by the lower member, a latch for locking the two members together to hold the selector-fingers in register with the contact-bar, a handle on the lower member to be grasped when it is desired to draw out the lower member, means connecting said handle to the latch whereby said latch will be released when the handle is pulled forward, and means for driving the take-up roll.

23. In combination, a music-holder, means for slidably supporting said music-holder whereby it may be drawn out in front of a piano-keyboard, a delivery-roll and a take-up roll on said music-holder, a contact-bar and a series of selector-fingers between said rolls, a driving means connected to the take-up roll, and means for changing the speed of the driving means when the music-holder is in its drawn-out position.

24. In combination, a music-holder, means for slidably supporting said music-holder whereby it may be drawn out in front of a piano-keyboard, a delivery-roll and a take-up roll supported by said music-holder, a series of key-selecting fingers and a contact-bar between the rolls, a series of magnets in circuit with the fingers and the contact-bar, a resistance carried by the music-holder one terminal of the magnet-circuit being connected thereto, a movable contact device adapted to be moved over the resistance and in contact therewith the other terminal of the magnet-circuit being connected thereto whereby resistance may be cut in or out of the magnet-circuit.

25. In a self-playing piano or like musical instrument, a music-roll holder movably supported beneath the keyboard thereof and arranged to be moved out to bring the music-sheet into view and to be moved back under the keyboard, a delivery and a take-up roll supported by the music-holder, and mechanism for driving the take-up roll when the music-holder is in its outer position.

26. In combination, a music-holder, a delivery-roll mounted in the front thereof, a take-up roll at the rear thereof, a series of key-selecting fingers and a contact-bar between the rolls, means for driving the take-up roll, a series of magnets in circuit with the contact-bar and the selecting-fingers, rocker-armatures coöperating with the magnets, key-operating devices actuated by the armatures, a speed-changing device connected to the driving means, a movable part operating said device, a dial or scale-plate for said movable part having symbols marked thereon to indicate the positions for the movable device operating the speed-changing means, a resistance carried by the music-holder, and having one terminal of the magnet-circuit connected thereto, a movable contact device engaging the resistance and having the other terminal of the magnet-circuit connected thereto, a scale-plate for said movable part having symbols thereon to indicate the positions for the movable contact, and a key-selecting music-sheet having symbols on each margin, those on one margin indicating the positions of the speed-changing device and those on the other indicating the positions of the contact device.

27. In a self-playing musical instrument, a music-holder slidably connected thereto and adapted to be drawn out in view so as to expose the music-sheet, means carried by said music-holder for supporting a music-sheet, means for actuating the sound-producing devices of the musical instrument, means coöperating with the music-sheet for controlling the action of the sound-producing devices, and means for advancing the music-sheet when the music-holder is in its drawn-out or exposed position.

28. In a self-playing piano, a music-roll holder slidably supported beneath the keyboard thereof and adapted to be drawn out to bring the music-sheet in view and to be moved in under the keyboard to conceal the same, a delivery and a take-up roll supported by said music-holder, and means for driving the take-up roller when the music-holder is in its drawn-out or exposed position.

29. In a self-playing piano or similar musical instrument, a music-roll holder movably supported beneath the keyboard thereof and arranged to be moved out to bring the music-sheet in view and to be moved back under the keyboard to conceal the same, a delivery and a take-up roll supported by the music-holder, and mechanism for advancing the music-sheet when the roll-holder is in its inner and its outer positions.

30. In a self-playing musical instrument, a music-holder formed of two members slidable one above the other, a series of key-selecting fingers carried by one of said sliding members, a contact-bar carried by the other sliding member, said contact-bar coöperating with the fingers, and means carried by the

music-holder for delivering and taking up a music-sheet.

31. In a self-playing musical instrument, a music-holder formed of independent slidable members, means for slidably connecting said members to the under side of the keyboard of the musical instrument, and means for locking the members together.

32. In a self-playing musical instrument, a music-holder formed of independently-slidable members, means for slidably connecting said members to the under side of the keyboard of the musical instrument, and means for locking one of said members to the keyboard when it is in its inner and in its outer positions.

33. In a self-playing musical instrument, the combination of a music-holder formed of an upper and a lower member slidable one upon the other, means for slidably connecting the upper member to the keyboard of the musical instrument, a series of selector-fingers and a contact-bar carried respectively by said members, and means for locking the members together to hold the selector-fingers in register with the contact-bar.

34. In an automatically-operated musical instrument, a music-holder comprising a sliding drawer, a delivery and a take-up roller for the music-sheet carried by said drawer, a gear-wheel on the take-up roller, separate gears with which said gear-wheel may be brought into mesh when the sliding drawer is in different positions, and means for driving said gears.

35. In an automatically-operated musical instrument, a music-holder comprising a sliding drawer, a delivery and a take-up roller for the music-sheet carried by said drawer, a gear-wheel on the take-up roller, separate gears with which said gear-wheel may be caused to mesh when the sliding drawer is in different positions, a shaft having a geared connection with both of said separate gears, and means for rotating said shaft.

36. In a music-playing instrument, a music-sheet holder comprising independently-slidable members slidably supported beneath the keyboard of the musical instrument, of a locking-lever pivoted to one of said members and provided at one end with means for engaging the other member and locking said members together when they are caused to register, and a handle on the other end of said lever for drawing out the member carrying said locking-lever, said handle operating to unlock the locking-lever when grasped to draw out the said member, substantially as described.

37. In an automatic music-playing instrument, a music-holder slidably connected thereto, a take-up roll and a delivery-roll for the music-sheet carried by said holder, means for driving the take-up roll to wind the music-sheet thereon, a brake device mounted on a fixed part of the instrument for controlling the action of said driving means, and manually-operable means carried by the sliding music-holder for operating said brake device.

38. In an automatic music-playing attachment for pianos, a music-holder slidably connected to the under side of the piano-keyboard, a delivery and a take-up roll for the music-sheet carried by said holder, means for driving the take-up roll to wind the music-sheet thereon, a brake device mounted on a fixed part of the instrument for controlling the action of said driving means, a hand-lever pivoted to the slidable music-holder, and a connection between said hand-lever and brake device whereby the latter may be operated during the inner and outer positions of the slidable music-holder.

39. In an automatic music-playing attachment for pianos, a music-holder slidable in a frame fixed to the under side of the piano-keyboard, a delivery and a take-up roll carried by the music-holder, a gear for driving said take-up roll, a shaft journaled in said frame and carrying said gear, a disk on said shaft, a brake-lever arranged to bear on the face of said disk to retard the speed of rotation of the shaft, a hand-lever pivoted to the slidable music-holder, and a connection between said hand-lever and brake-lever, whereby the latter may be operated when the music-holder is in its inner and in its outer positions, substantially as described.

40. In an automatic music-playing attachment for pianos, a music-holder composed of two independently-slidable members connected to the under side of the piano-keyboard, a delivery and a take-up roll carried by one of said members, a brake-wheel mounted on the shaft of the delivery-roll, a spring-blade having a bearing on the periphery of said brake-wheel, and a cam carried by one of said frame members and arranged to act on the said spring-blade, as and for the purpose described.

Signed at New York, in the county of New York and State of New York, this 8th day of May, A. D. 1901.

GEORGE HOWLETT DAVIS.

Witnesses:
WM. R. DAVIS,
J. A. E. CRISWELL.