Jan. 27, 1925.

1,524,555

W. H. KEMPTON

GEAR WHEEL

Filed March 24, 1924

Fig. 1.

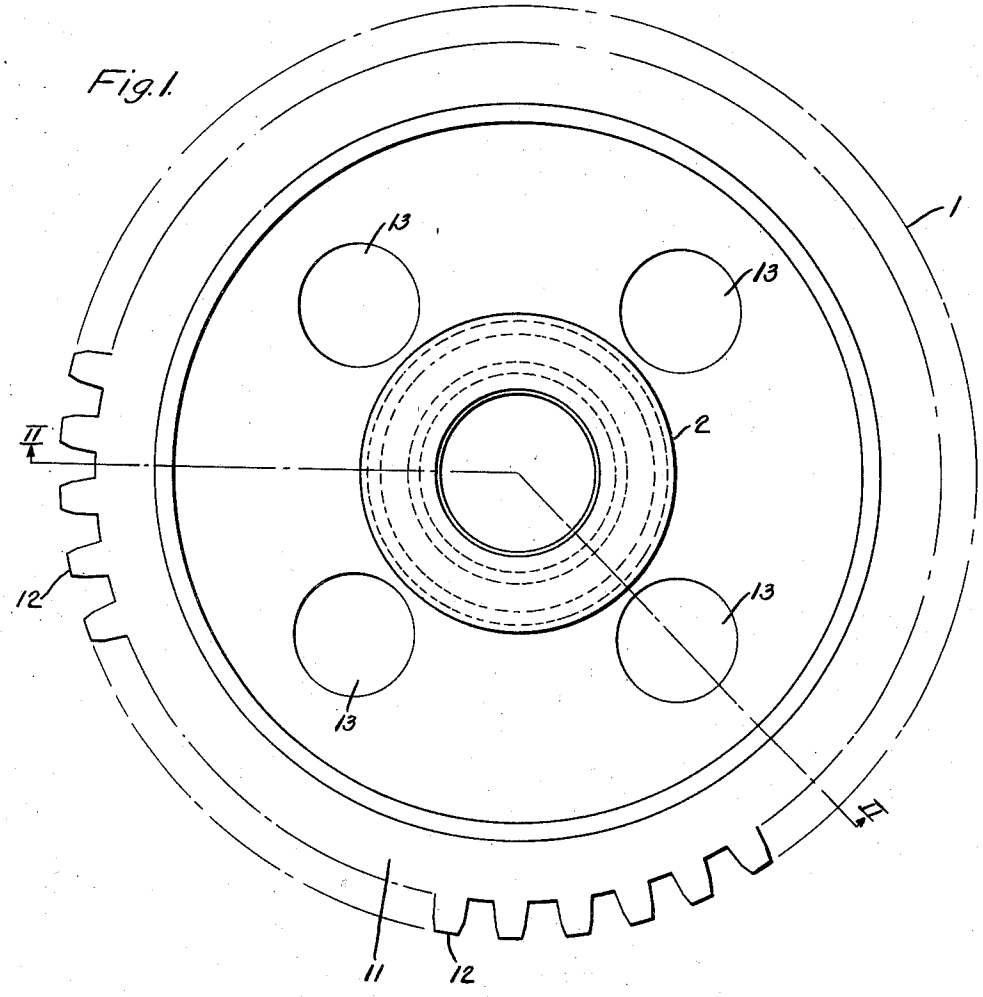

Fig. 2.

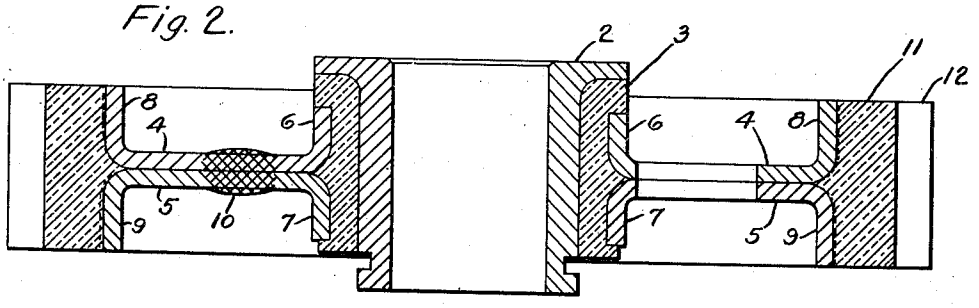

WITNESSES:

S. H. Voelker.

W. C. Wheeler.

INVENTOR

Willard H. Kempton.

BY

Wesley G. Carr

ATTORNEY

Patented Jan. 27, 1925. 1,524,555

UNITED STATES PATENT OFFICE.

WILLARD H. KEMPTON, OF PITTSBURGH, PENNSYLVANIA, ASSIGNOR TO WESTINGHOUSE ELECTRIC & MANUFACTURING COMPANY, A CORPORATION OF PENNSYLVANIA.

GEAR WHEEL.

Application filed March 24, 1924. Serial No. 701,286.

To all whom it may concern:

Be it known that I, WILLARD H. KEMPTON, a citizen of the United States, and a resident of Pittsburgh, in the county of Allegheny and State of Pennsylvania, have invented a new and useful Improvement in Gear Wheels, of which the following is a specification.

My invention refers to gear wheels and particularly to gear wheels having a working face of fibrous impregnated material molded on a metal central section or support.

Metal centers or webs for machine elements are particularly desirable because the metal provides a structure which is not subject to warping. The metal center also provides a support upon which the non-metallic material may be assembled and molded into a working face having uniform structure and wearing qualities. Such uniform distribution of the molded impregnated material also aids in producing a well balanced wheel.

Heretofore the hub, web and flange portions of gear wheels upon which the non-metallic working face was molded were made of cast metal and then machined to the desired dimensions. Such centers provided a good support for the non-metallic material, but for certain classes of work they were unnecessarily heavy. Metal centers of lighter material, such as pressed steel, have been used, but the resonance and resiliency of the metal tended to transmit sound from the parts of the machine which were in contact with it.

My invention is intended to obviate this disadvantage it being among the objects thereof to provide a gear wheel having a light-weight metal center and a working face of molded laminated material.

Another object of my invention is to provide a gear wheel having a metal central portion which is provided with a non-metallic member for eliminating resonance and sound transmission therefrom.

In the drawing constituting a part hereof and in which like numerals designate like parts,

Figure 1 is a plan view of my gear wheel, and

Fig. 2 is a cross sectional view of my gear wheel taken along the line II—II of Fig. 1.

The gear wheel 1 comprises a central metal hub 2 having a non-metallic annular ring portion 3 of fibrous material impregnated with a binder such as a phenolic condensation product and molded thereon with heat and pressure. A web member of punched sheet metal such as sheet steel comprises discs 4 and 5 which are provided with central flanges 6 and 7 and outer flanges 8 and 9 respectively. The metal web members are fastened together by any suitable means such as spot welds 10 or they may be held together merely by molding them in the material 3 of the hub member and the material of the working face 11 when the wheel is assembled in the molding operation. Openings 13 are punched in the metal web members in order to lend resilience to the wheel and to decrease the weight.

The outer surface of the hub member 2, the inner flanges 6 and 7 and the outer flanges 8 and 9 are roughened or knurled in order to provide a gripping surface for the molded material. The annular ring 3 and the working face 11 are composed of fibrous material impregnated with a phenolic condensation product or other suitable binder and are combined with the metal hub 2 and the metal web member in a mold under heat and pressure. The gear teeth 12 are cut in the working face 11 after the gear blank is molded.

In assembling the wheel, the metal hub 2 and the web members 4 and 5 are assembled in the base of a mold which is suitably secured in the matrix and molding material, such as shredded duck or paper, or wood-flour which has been impregnated with a phenolic condensation product, is placed in the space between the flanges 6 and 7 and the metal hub 2. The working face 11 may be formed by superimposing a plurality of layers of similarly impregnated duck on the face of the metal rim which is formed by the flanges 8 and 9. The mold is then closed by the plunger and is subjected to heat and pressure between the heated platens of a hydraulic press in order to cure the binder and to mold the ring 3 and working face 11 to the desired shape.

This structure provides a wheel having a light-weight, strong, metal support and a non-metallic working face. The working face 11 and the annular ring portion 3 between the metal web and the metal hub provide a means for eliminating resonance in

the wheel and for reducing the transmission of sound from other machine elements in contact with the wheel. The web member is so constituted as to provide a strong central portion having such resiliency and lightness as to promote quiet running of the gear wheel.

Although I have described a specific embodiment of my invention I do not wish to be limited thereto as other methods of constructing my gear wheel may be employed without departing from the spirit of my invention. The web member, for example, may be made of various kinds of metal or I may employ a single punched disk or several disks, upon which to form the flanges. When constructed of two disks, they may be united by welding, riveting or by any other suitable means. Other modifications of my invention will suggest themselves to those skilled in the art without departing from the spirit of my invention, the scope of which is defined in the annexed claims.

I claim as my invention:

1. A gear wheel comprising a working face of molded fibrous material, an inner concentrically formed metal portion, and a hub of molded fibrous material and metal.

2. A gear wheel comprising a working face of molded fibrous material, an inner concentrically formed metal portion, and a hub of molded fibrous material and metal, said concentric metal portion comprising a flange for supporting said working face, a web and a flange supported by said hub.

3. A gear wheel comprising a working face of molded fibrous material, an inner concentrically formed metal web portion, and a hub of molded fibrous material and metal, said concentric metal web portion comprising two discs provided with opposing laterally extending flanges molded in said working face and in the fibrous material of said hub.

4. A gear wheel comprising a working face of molded fibrous material, a metallic web member, a hub of molded fibrous material and metal, a flange in said web member for supporting said working face and another flange in said web member for anchoring to the fibrous material of said hub.

5. A gear wheel comprising a central hub of metal having a ring of fibrous material molded thereon, a two part metal web member, a flange formed thereon for anchoring in said ring and another flange thereon, and a non-metallic working face supported by said second flange.

6. A gear wheel comprising a central hub of metal having a ring of fibrous material molded thereon, a two part metal web member of punched discs of metal united together, laterally extending central and outer flanges formed in said discs and a non-metallic working face molded on said outer flange.

7. A gear wheel comprising a metal center, a metal web, molded material therebetween, and a molded working face on said web.

8. A gear wheel comprising a metal center, a metal web concentric therewith, molded material therebetween, and a molded working face on said web.

9. A gear wheel comprising a metal center, a metal web concentric therewith, molded material therebetween, and a molded working face on said web, those parts of the metal members which are in contact with the molded portions being roughened.

In testimony whereof, I have hereunto subscribed my name this 5th day of March, 1924.

WILLARD H. KEMPTON.