W. & T. W. MOLL.

STEAM TRAP.

APPLICATION FILED MAR. 12, 1909.

1,013,507. Patented Jan. 2, 1912.

2 SHEETS—SHEET 1.

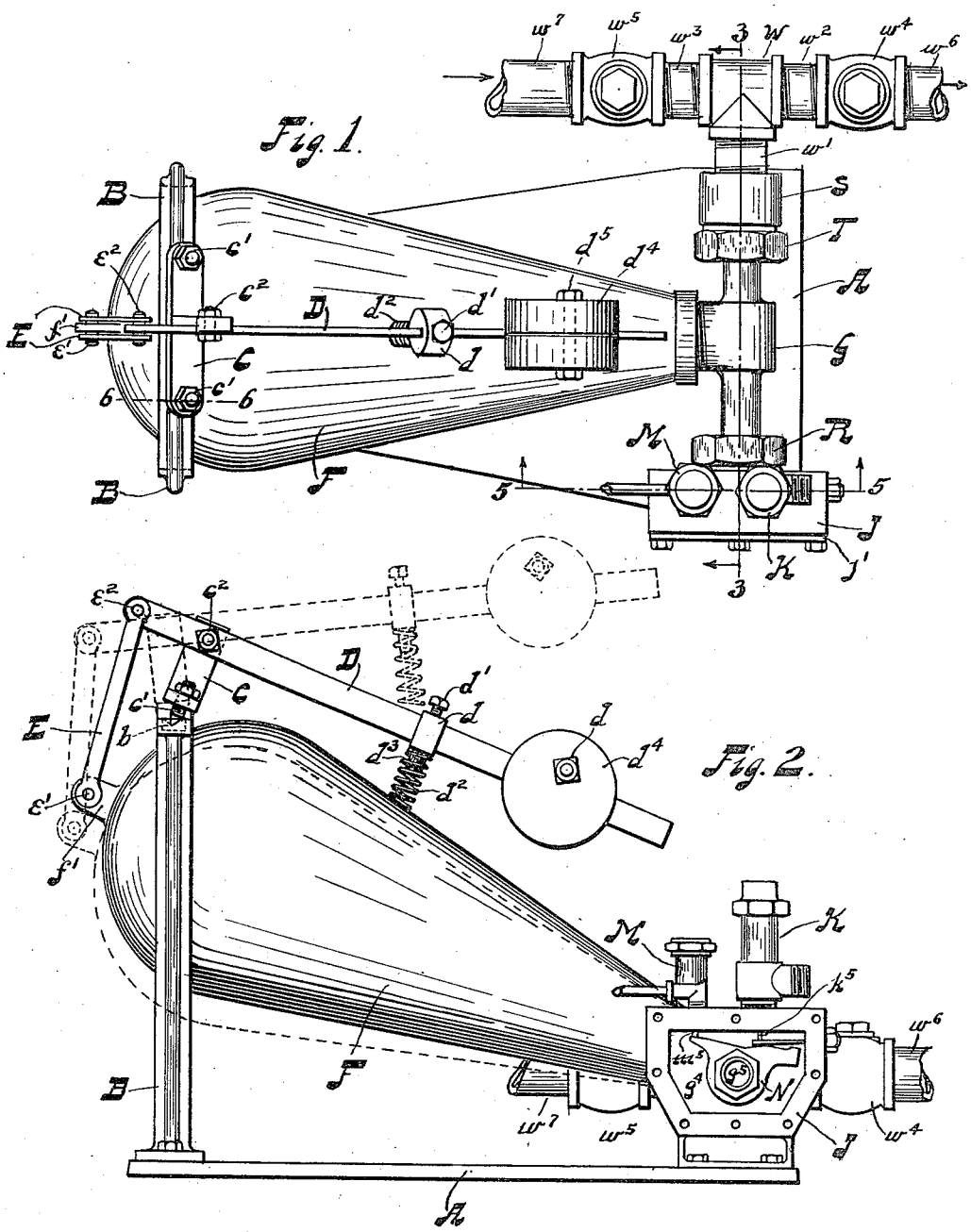

Witnesses:
Edw. Lindemeller
Jacob J Neuert Jr

Inventor
William Moll
Theodore W. Moll.
By Wilson Kent & Ramsey
His Attorney.

COLUMBIA PLANOGRAPH CO., WASHINGTON, D. C.

W. & T. W. MOLL.

STEAM TRAP.

APPLICATION FILED MAR. 12, 1909.

1,013,507.

Patented Jan. 2, 1912.

2 SHEETS—SHEET 2.

Fig. 3.

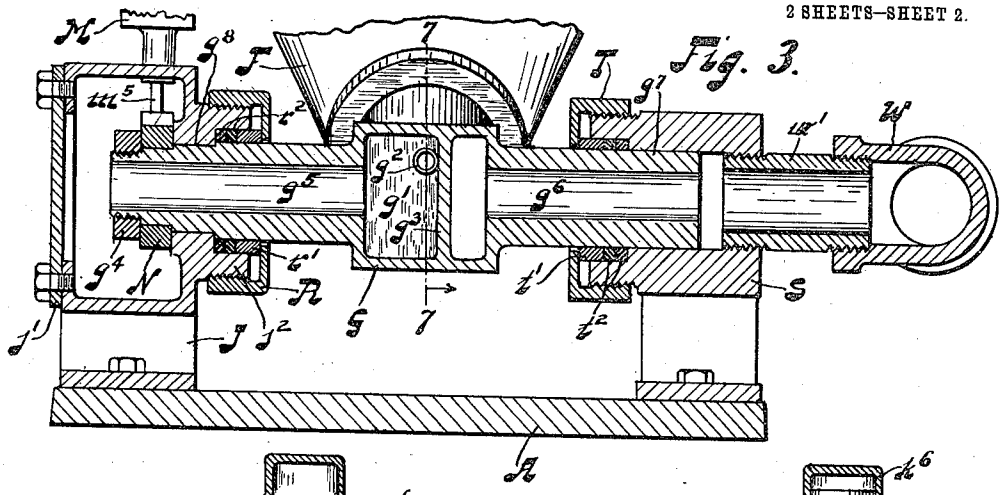

Fig. 5.

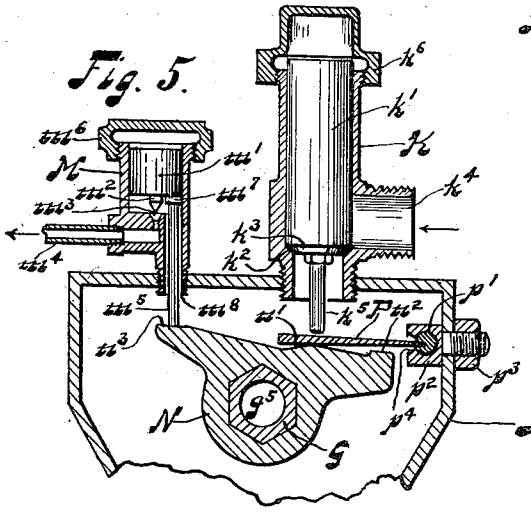

Fig. 4.

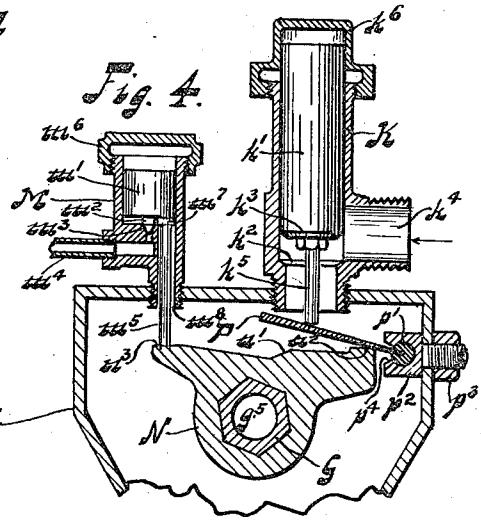

Fig. 7.

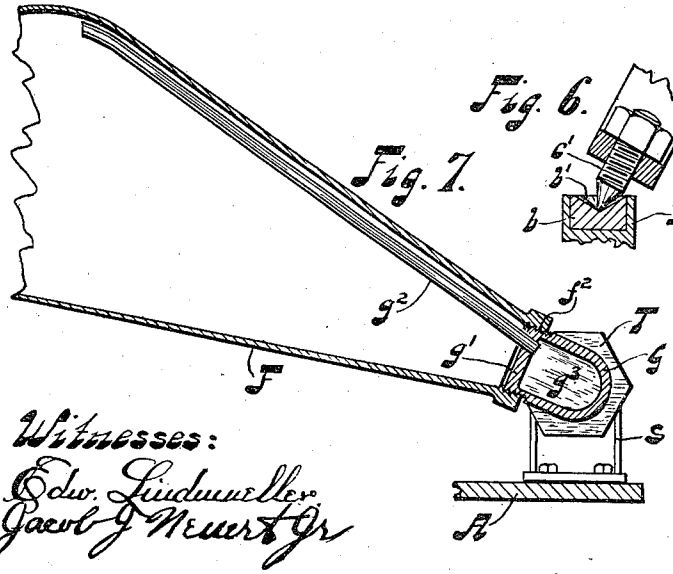

Fig. 6.

Fig. 8.

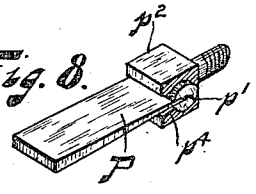

Witnesses:

Edw. Lindemuller.

Jacob J. Neuert Jr.

Inventor:

William Moll

By Theodore W. Moll.

Wilcox Fenton & Ramsey

His Attorney.

COLUMBIA PLANOGRAPH CO., WASHINGTON, D. C.

UNITED STATES PATENT OFFICE.

WILLIAM MOLL AND THEODORE W. MOLL, OF CLEVELAND, OHIO.

STEAM-TRAP.

1,013,507. Specification of Letters Patent. Patented Jan. 2, 1912.

Application filed March 12, 1909. Serial No. 483,031.

To all whom it may concern:

Be it known that we, WILLIAM MOLL and THEODORE W. MOLL, residing at Cleveland, in the county of Cuyahoga and State of Ohio, have invented certain new and useful Improvements in Steam-Traps, of which the following is a specification.

This invention relates to what are known as return steam traps for returning the water of condensation from a heating system, or the like, to a boiler.

The particular type of trap involved is one having an oscillatory receiver which receives the water of condensation when in a raised position, and which, when in its lowered position, is adapted to receive steam to expel the water.

The particular object of the invention is to simplify and improve the construction and operation of such traps, by providing novel operating mechanisms, and particular features of structure and arrangement of parts.

The elements, combinations, and arrangements of parts constituting the present invention will be hereinafter fully set forth, and succinctly defined in the annexed claims.

In the accompanying drawings, which are to be taken as a part of this specification, and in which we have illustrated a merely preferred form of embodiment of the invention: Figure 1 is a top plan view of a device embodying the invention; Fig. 2 is a side elevation thereof, the face-plate of the steam-box being removed to disclose the mechanism for operating the steam inlet valve and the air discharge valve. Fig. 3 is a cross section on the line 3—3 of Fig. 1; Figs. 4 and 5 are sections taken on the line 5—5 of Fig. 1, and illustrating different positions of the valve operating means; Fig. 6 is a detail sectional view of the counterbalancing lever; Fig. 7 is a section on the line 7—7 of Fig. 3, partly broken away; and Fig. 8 is a detail perspective of a part of the steam inlet controlling mechanism.

Referring more particularly to the drawings, wherein like reference characters indicate like parts throughout the several views, A indicates a suitable base, provided at one end with a yoke standard B. Located centrally on the cross arm of the yoke B is a T-shaped support C provided on its arms with pointed set screws c^1 of hardened metal, which engage in V-shaped cups b of hardened metal set in the cross bar of the yoke B, to constitute a fulcrum for the counterbalancing lever D, upon which is adjustably and slidably mounted a counterbalancing weight d^4, secured in adjusted position by a bolt d^5. The said counterbalancing lever D is secured by a bolt c^2 to the upwardly extending stem of the T-shaped rocker support C; and at one end the lever D is pivotally connected to a link E, as at e^2, the said link being pivoted as at e^1 to a lug f^1 extending from a receiver F.

d indicates a collar or like member slidable upon the lever D, and adapted to be secured in desired position thereon by means of set screw d^1. On its under side the said member d is provided with a stem d^3, which is surrounded by and affords more or less of a guide for a coil spring d^2, which is adapted to bear on receiver F. (See Figs. 1 and 2.)

The receiver F before mentioned is preferably egg shaped and at its smaller end is screw-connected to a hollow rocker-shaft G, the said shaft having bearings as at g^7 and g^8 in brackets S and J, respectively, secured to the base A.

g^3 indicates a partition wall which divides the hollow shaft transversely, and g^1 indicates a separating wall extending longitudinally of the shaft, and from which opens a tube g^2 into the interior of the receiver F, said tube extending preferably along the upper and inner wall of the receiver, and well toward the rear or closed end thereof. The section g^6 of the hollow shaft upon one side of the partition wall g^3 communicates with a T-branch W coupled to the bracket S, and which is provided with an inlet pipe w^7 from the heating system, controlled by a check valve w^5; and with an outlet or discharge pipe w^6, leading preferably to the boiler and controlled by a check valve w^4. The section g^5 of shaft G on the other side of partition wall g^3 is in communication with a steam chest J^1, which is really a development of bracket J, the said steam chest being more fully described hereinafter.

R indicates a packing nut, screwed to an annular extension j^2 of one wall of the steam chest J^1, the said packing nut surrounding shaft G and bearing against a ring r^1 and packing rings r^2 interposed between the hollow shaft G and the shouldered inner periphery of extension j^2, to prevent the leakage of steam from the steam-chest. A similarly arranged packing nut

T, screwed to an annular extension of bracket S, surrounds the other end of shaft G, and bears against the ring t^1 and packing rings t^2 interposed between the hollow shaft and the shouldered inner periphery of said extension, to prevent passage of the steam from the section g^6 of the hollow shaft except through the appointed channels.

Screwed to the steam-chest J^1 is a steam inlet coupling k^4, controlled by a valve K, and there is also provided an air valve M. The valve K comprises a casing, a gravity seating piston or valve member proper k^1, a cap screwed on the top of the casing and affording a guide for the piston, and a projecting stem k^5, which extends down into the steam-chest and beyond the valve seat k^2. The valve M comprises a casing, a cap m^6, a plunger or guide member m^1 serving also by its weight to cause gravity seating of a valve member proper m^2, and a valve seat m^3 with which said member m^2 is adapted to coöperate. There is also provided a stem m^5 operating loosely through a passage m^8 in the casing, and adapted by means of a contact end m^7 to contact with the under surface of the plunger m^1, so that the valve will be moved off the seat m^3 to open communication between the interior of the valve casing and an air outlet pipe m^4. The stems m^5 and k^5 of the air and steam valves respectively, are operated by a single means, which is controlled by the movement of the hollow shaft G, said means comprising in the present instance a cam N, which is rigidly secured to the hollow shaft G within the steam-chest, as by means of a lock-nut g^4. The said cam N is provided with a finger n^3 adapted to engage the stem m^5 of the air valve, and with a finger n^2 extending in an opposite direction from the finger n^3. The cam N is provided also with a bulge located between finger n^2 and the axial center of the cam. Mounted at the side of the steam-chest J^1 nearest the finger n^2 is a block p^2, which is provided with a screw threaded extension passing through the wall of the steam-chest, and secured by means of a nut p^3. The said block p^2 carries a rotatable split pin p^1, to which is secured a flat pressure member P. The face of said block is cut away as indicated at p^4 to permit of some slight rotation of the pin p^6 within the block, and consequent movement of the end of the member P. The said member P extends over the finger n^2 and the bulge n^1 of the cam N, and so that its free end will be below the stem k^5 of the valve K.

The operation of the device is as follows: When the receiver F becomes sufficiently filled with water entering it through pipe w^7 and passage g^6 from a radiator or other heating system, the effect of the weight d^4 will be overcome and the receiver will drop to its lower position, shown in the dotted lines of Fig. 2. This movement of the receiver causes a partial rotation of the hollow shaft G in its bearings, whereby the cam N is rotated to actuate the stem k^5 of the steam valve K. The bulge of the cam is so located (or equavilent relativities are so devised) that the bulge will contact with the member P before contact with the latter of the finger n^2. The bulge being located nearer the axis of the cam than is the finger n^2, it follows that the cam will act on member P through said bulge at the beginning of the rotative movement of the cam, utilizing the most effective leverage. A powerful, and yet slow opening movement of the valve thus takes place at first, through stem k^5, which is followed by a gradually faster movement as the finger n^2 contacts with the member P. (See Figs. 4 and 5.) The opening of the valve thus accomplished permits the entrance of steam from the boiler through the port k^4. The steam passes into the chest J, into the passage g^5 of the hollow shaft, through tube g^2, and thence to the interior of the receiver F, at the upper rear end thereof, forcing the water therefrom. The expelled water flows through the passage g^6 of the hollow shaft G, and the steam pressure being now equalized because the pressure upon the surface of the water in the receiver is the same as that from the generator in pipe w^6, forcibly opens the check valve w^4 and passes to the boiler. As soon as the water of condensation in the receiver is discharged, the latter resumes its normal position under the influence of the weight d^4. This return movement of the receiver, by reason of the consequent rotation of hollow shaft G, moves the cam N so that the valve k^1 may descend by gravity to shut off the supply of steam to the steam-chest. While the same movement of the cam, through finger n^3 actuates the stem m^5 to raise valve m^3 from its seat, thus permitting escape of the air from the heating system entrapped in the receiver, through tube g^2, passage g^5, around stem m^5 into casing M, and through pipe m^4.

The general structure and operation of the device are more or less familiar in the art, but certain features of the present device, as described, merit especial consideration. One of these features is the form of adjustable fulcrum, which admits of delicate adjustment of the apparatus so that it may be caused to discharge when full of water to greater or less amount, and which by reason of the hardened point bearings provides a particularly sensitive and responsive action of the parts. Another and related improvement is the bearing spring d^2, which, because of its adjustability along

the lever D, and the gradually enlarging contour of the receiver F, may be made to exert more or less pressure on the receiver, and thus assist more or less in the movements of the same, besides acting as a cushion. Attention is also directed to the valve operating mechanism, whereby the desired slow and easy, though powerful, preliminary opening movement of the steam valve is effected, to be followed by a more rapid movement, the entire opening operation being accomplished without shock or jar. While at the same time the opening mechanism controls the air escape from the receiver. The use of gravity seating valves is also believed to constitute an improvement, for obvious reasons, and the provision of the guide-cap for valve K is important, because, the guide being above the valve-seat, there is no obstruction to the passage of steam through the valve. Furthermore, there are in this device no exposed parts, and the whole device is unitary and self-contained.

As many changes could be made in the above construction and many apparently widely different embodiments of this invention could be made without departing from the scope thereof, it is intended that all matter contained in the above description or shown in the accompanying drawings shall be taken as illustrative, and not in a limiting sense. It is also to be understood that materials, sizes, and relativities of parts, are unimportant, except as they are called for in the following claims, which define the scope of invention contemplated.

Having described our invention, what we claim as new and desire to secure by Letters Patent is:

1. In a device of the kind described, a steam inlet valve, a cam for controlling the same and having a finger, a bulge on said cam between the finger and the axis of the cam, and a pressure member extending between said cam and the valve adapted to be moved first by contact with said bulge and then by contact with said finger.

2. In a device of the kind described, a valve having a stem, a cam having a finger and a bulge intermediate the finger and the axis of the cam, a member extending between the cam and the stem, said member being pivotally mounted, and adapted to be moved by contact with the bulge and then by contact with the finger of the cam.

3. In a device of the kind described, a base, an oscillatory receiver, a yoke standard, a lever, a link connecting said lever with said receiver, and an adjustable fulcrum for said lever upon said standard.

4. In a device of the kind described, a base, an oscillatory receiver, a yoke standard, a lever connected with said receiver, an adjustable weight upon said lever, and a coil spring interposed between said lever and said receiver, said spring being adjustable longitudinally of said lever.

In testimony whereof we affix our signatures in the presence of two witnesses.

WILLIAM MOLL.
THEODORE W. MOLL.

Witnesses:
JACOB J. NEUERT,
LOUISE W. ROSS.

Copies of this patent may be obtained for five cents each, by addressing the "Commissioner of Patents, Washington, D. C."