United States Patent [19]

Parke et al.

[11] **3,900,165**

[45] **Aug. 19, 1975**

[54] **HAND CARRIED SPRAYING APPARATUS**

[75] Inventors: **James G. Parke; C. Richard Gerlach,** both of San Antonio, Tex.

[73] Assignee: **Micro-Gen Equipment Corporation**

[22] Filed: **Apr. 15, 1974**

[21] Appl. No.: **460,725**

[52] **U.S. Cl.** **239/375**

[51] **Int. Cl.** **A01g 25/14**

[58] **Field of Search** 239/351, 135, 355, 138, 239/375; 43/129

[56] **References Cited**

UNITED STATES PATENTS

1,899,749	2/1933	Deutsch	239/375
2,795,461	6/1957	Durkin	239/375 X
2,815,984	12/1957	Llopis	239/375
3,633,825	1/1972	Waldron	239/135
3,802,511	4/1974	Good, Jr.	239/375

Primary Examiner—Lloyd L. King

Attorney, Agent, or Firm—Cox, Smith, Smith, Hale & Guenther Incorporated

[57] **ABSTRACT**

This invention relates to a chemical spraying apparatus that may be hand carried while spraying. The spraying apparatus is powered by a small gasoline engine that drives a low volume compressor. The compressor pressurizes the atmosphere to a given pressure as determined by the speed of the gasoline engine. A chemical insecticide is mixed in the spraying nozzle with pressurized air being supplied by the compressor with the mixing being at some point remote to the compressor. A metering valve controls the flow of the insecticide into the mixing chamber of the nozzle while spraying. Design of the nozzle insures that droplets of the insecticide are broken down to the proper size range to insure maximum effectiveness per unit volume of the active ingredient.

10 Claims, 8 Drawing Figures

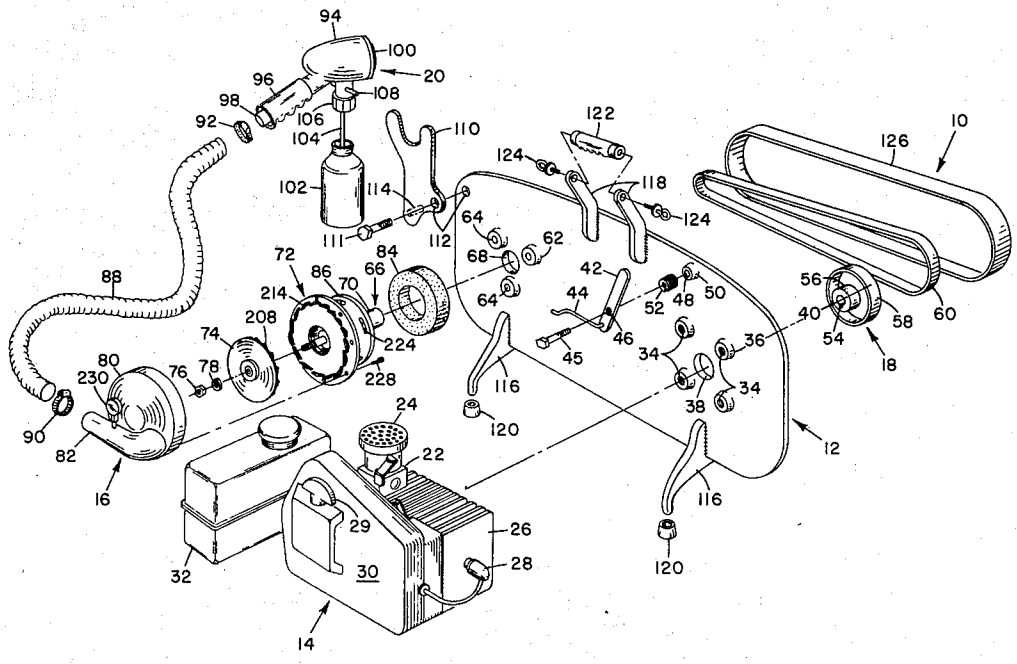

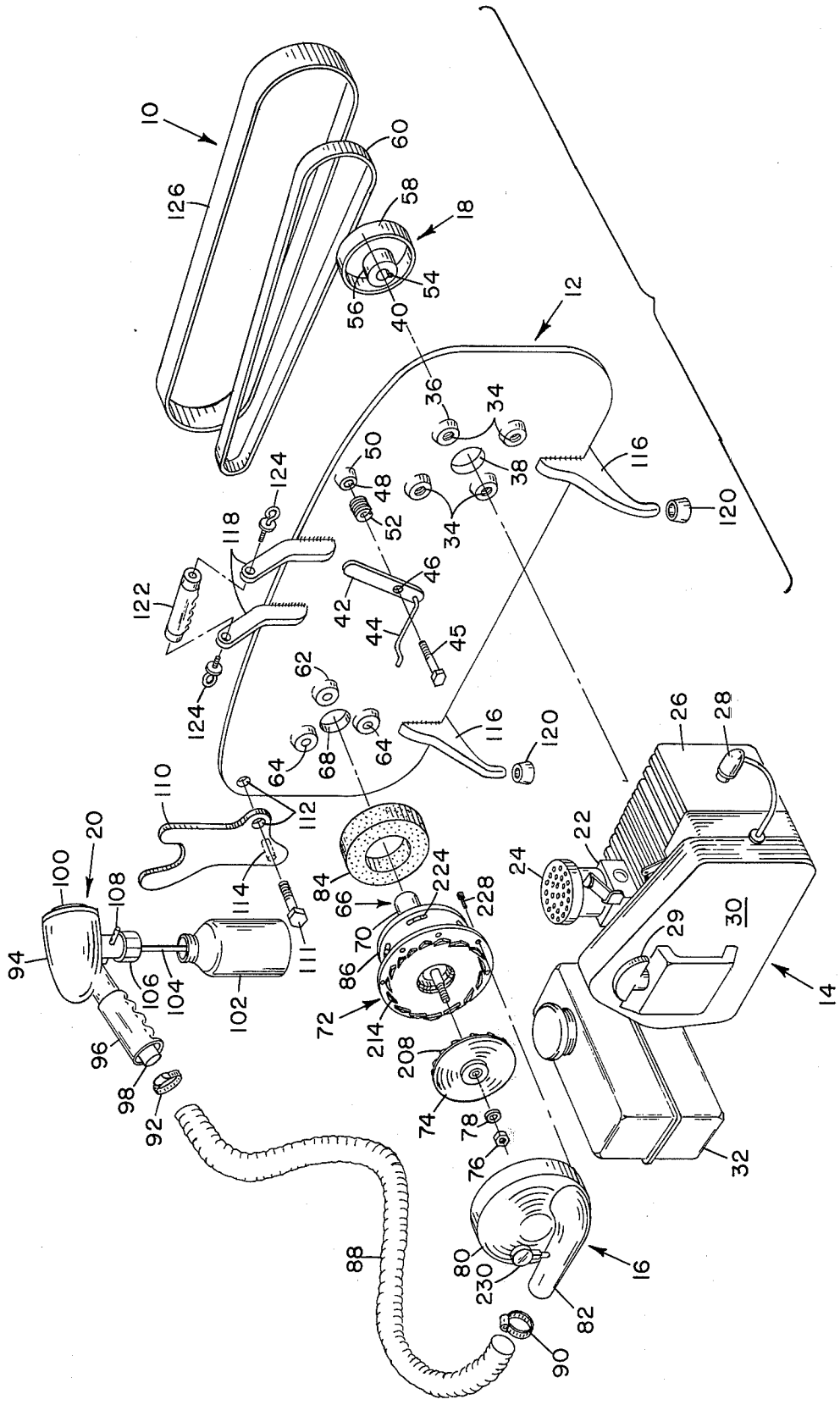
10
126
60
58
18
54
56
40
12
36
34
50
48
52
38
116
120
124
118
122
46
42
44
45
62
64
68
110
112
114
111
20
100
108
94
106
104
102
96
98
92
84
66
70
86
72
224
228
214
208
74
78
76
88
80
230
82
90
16
26
28
22
24
29
30
14
32

FIG. 1

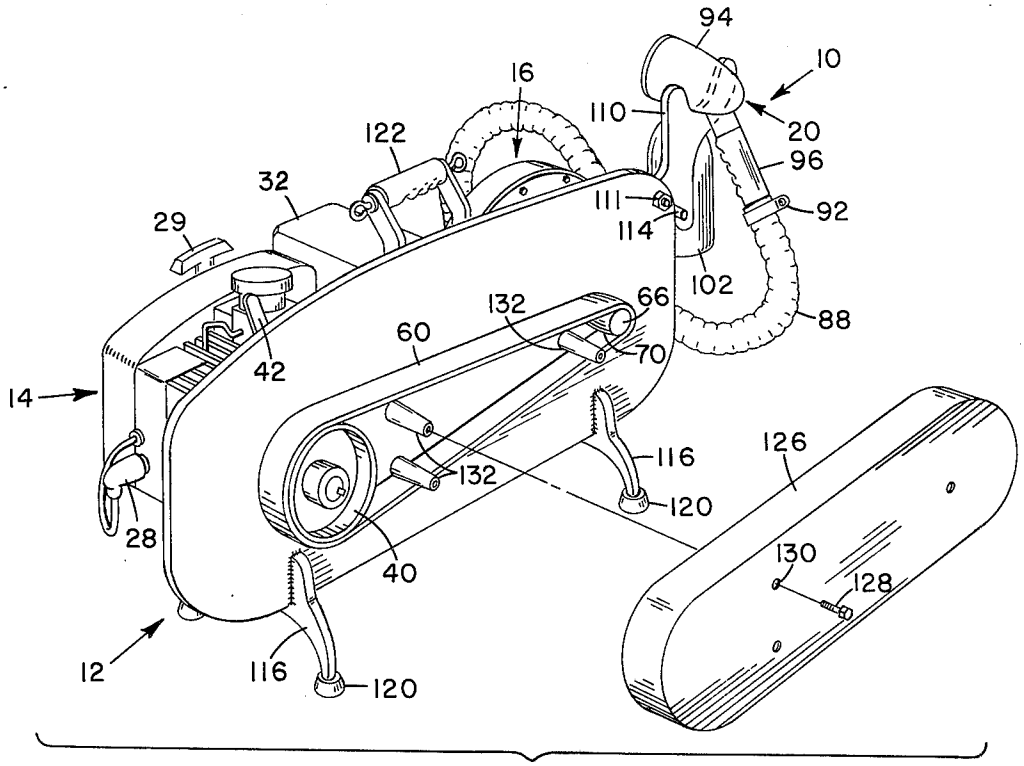
94
10
16
110
20
122
96
32
111
92
29
114
102
66
132
88
60
70
42
14
116
126
132
120
130
28
128
40
12
116
120

FIG. 2

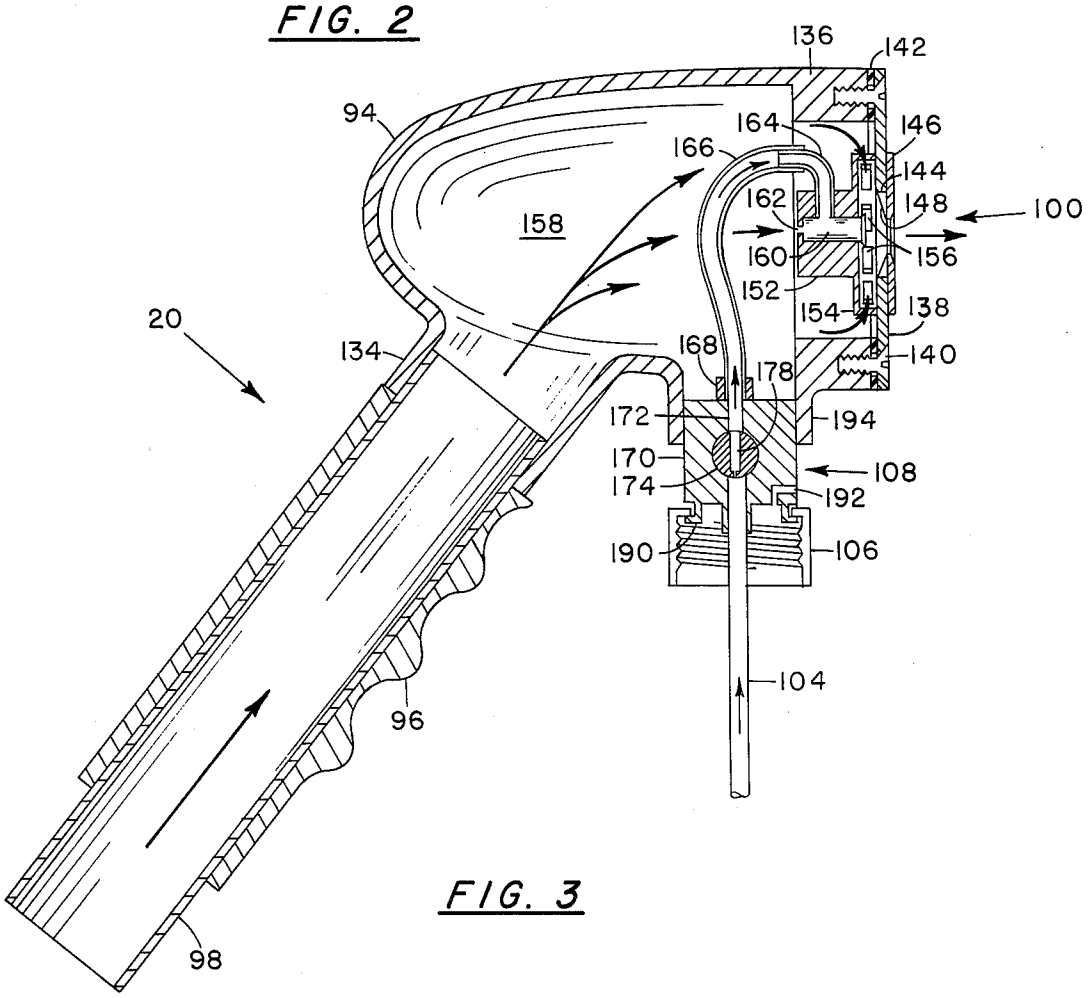
136
142
94
164
146
166
144
162
148
100
158
160
156
152
154
138
20
134
168
178
140
172
194
170
108
174
192
190
106
104
96
98

FIG. 3

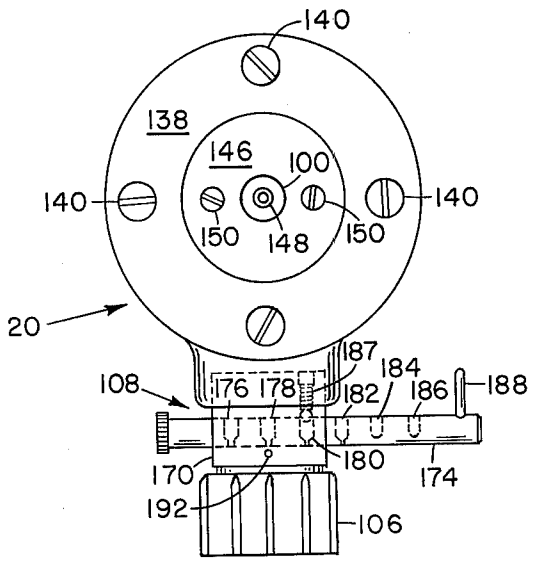
140
138
146
100
140
140
150
148
150
20
187
184
108
176
178
182
186
188
180
170
174
192
106

FIG. 4

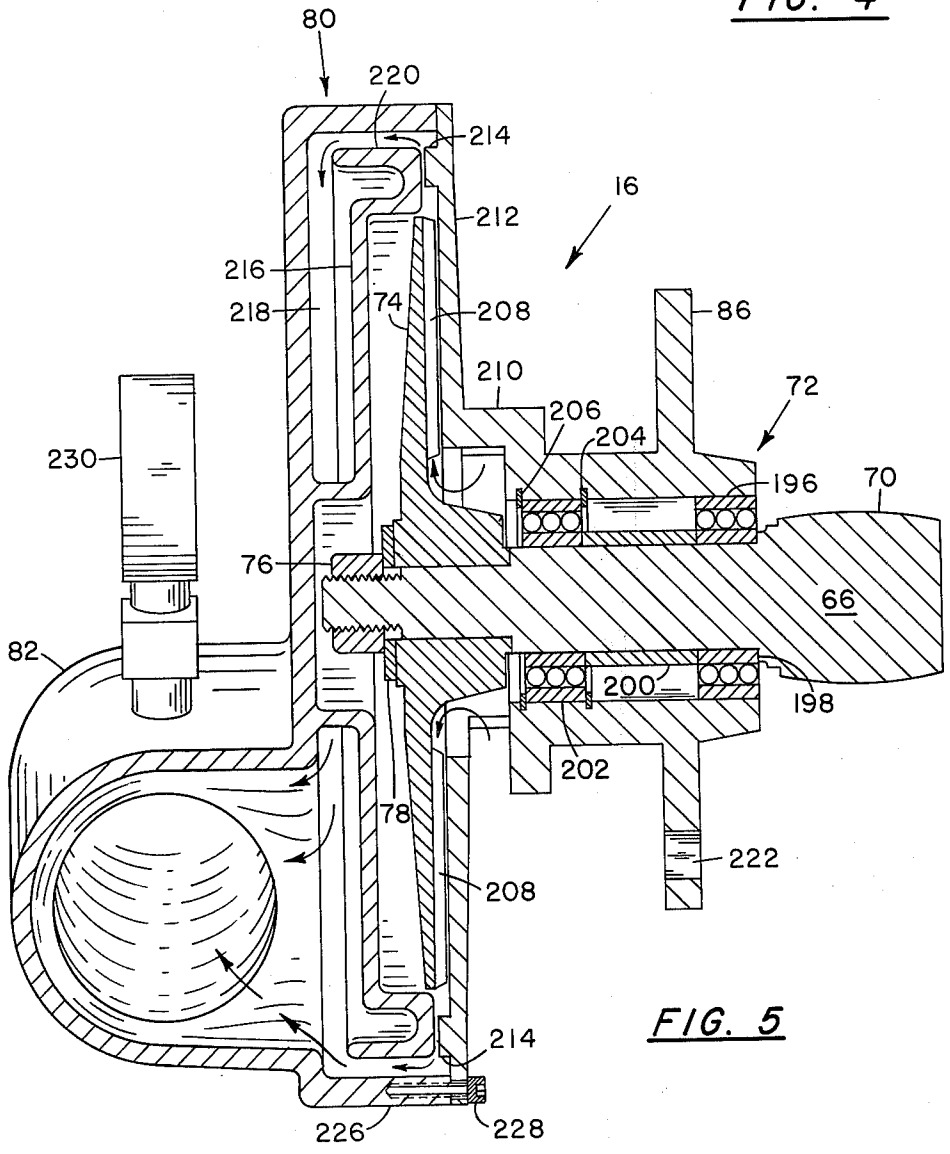
80
220
214
16
212
216
218
74
208
86
210
72
206
204
230
196
70
76
66
82
200
198
202
78
222
208
214
226
228

FIG. 5

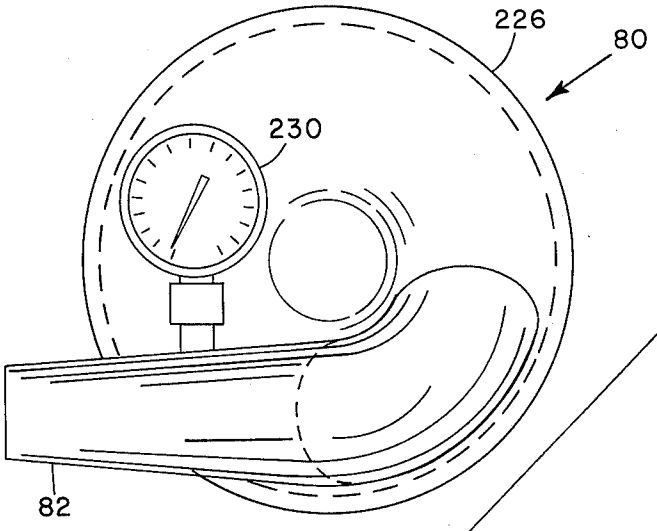
226
80
230
82

FIG. 6

FIG. 7

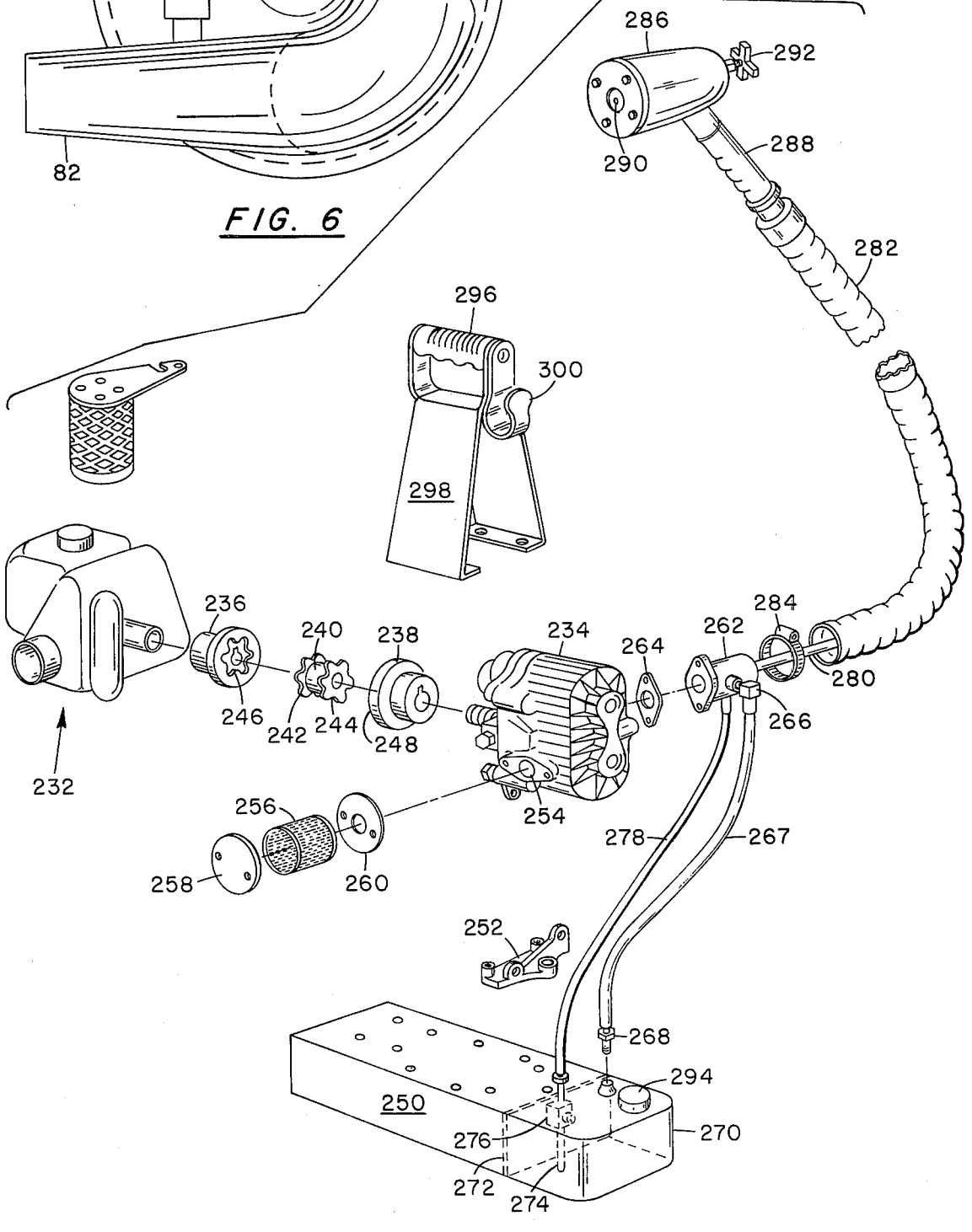
286
292
290
288
282
296
300
298
236
240
238
234
264
262
284
280
246
242
244
248
266
232
256
254
278
267
258
260
252
268
294
250
270
276
272
274

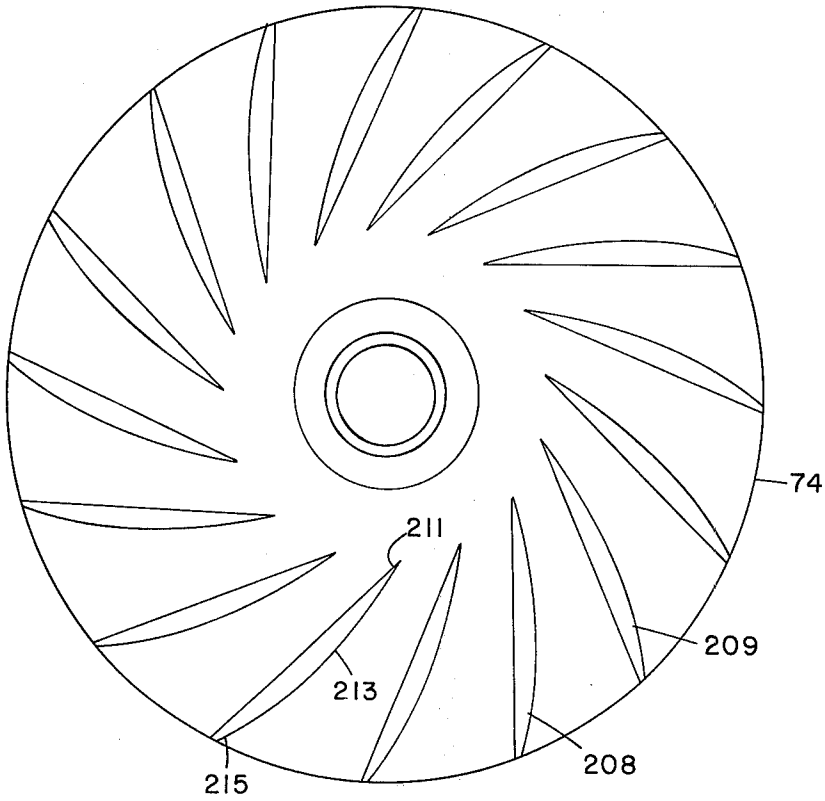

FIG. 8

HAND CARRIED SPRAYING APPARATUS

BACKGROUND OF THE INVENTION

This invention relates to liquid chemical sprayers, and more particularly to a hand carried liquid chemical sprayer using constant pressure and ultra low volume of chemical to insure maximum effectiveness of the chemical insecticide. The present invention was developed in conjunction with efforts to produce a more efficient, economic and reliable insecticide spraying device.

BRIEF DESCRIPTION OF THE PRIOR ART

Prior to the present invention insecticides, pesticides, fungicides and other chemicals have been spread over large areas by being disbursed in a liquid carrier such as water or a suitable petroleum product. To aid in the breaking up of droplets into small particles whereby a fog containing the insecticide may be created, the insecticide and carrier was preheated before being dispersed through a nozzle. The preheating aided in breaking down the surface tension of the various droplets and, consequently, aided in reducing the size of the various droplets by turbulent conditions created within the nozzle immediately prior to discharge.

Many of the prior art insecticide sprayers worked on a burner and a fan principle. The burner would preheat the air into which the insecticide was introduced immediately prior to discharge. A large volume of heated air moves through the nozzle in order to create a strong turbulence therein and blow the insecticide some distance upon being ejected through the nozzle. One of the problems with the forced air (fan) type of sprayer was that a sufficient percentage of the insecticide would not be within the droplet size range for the maximum kill ratio per unit volume of insecticide used. Even the preheating of the insecticide and carrier would not adequately insure that the desired particle size range would be reached.

Recently a suitable device was developed wherein preheating was no longer necessary in order to break the droplets down to the desired particle size range. As reflected in U.S. Pat. No. 3,648,401 to George S. Stains and U.S. Pat. No. 3,793,762 issued Feb. 26, 1974 to George S. Stains, there is shown an apparatus for using low pressure and a particularly designed nozzle device. The nozzle device and the low pressure would insure a sufficient percentage of the insecticide would be within the desired particle size range upon using the apparatus and method described in the patent and patent application. Another patent showing a similar type of device is U.S. Pat. No. 3,633,825, with the nozzle shown therein creating increased turbulence before discharge of the insecticide into the atmosphere.

Of all the previously mentioned commercial type of insecticide sprayers, none of them had the ease and the portability of the present design. All of the prior insecticide sprayers were quite bulky and either had to be rolled around on a cart, operated on the back of a motor vehicle, such as a pickup truck, or moved by some other means that would only allow a limited access to all of the desired areas. Of the few insecticide sprayers that would possibly break a sufficient percentage of the insecticide by volume down to the desired particle range, none of these insecticide sprayers have the portability of the present design, and certainly none could be carried by hand. Also, of these prior insecticide sprayers that could meet the parameters set forth in this application for droplet size for the maximum kill ratio, none of these prior sprayers allow for the mixing of the pressurized air and insecticide at some point remote to the rest of the spraying apparatus. By using the remote mixing not only is the spraying apparatus portable, but the nozzle which contains the remote mixing is independently movable with respect to the main body of the spraying apparatus.

One of the reasons why the prior devices that could reach the desired percentage of particles within the proper size range did not have the portability as the present invention was due to the compressor and motor required to drive the compressor. The present invention helps to overcome the problem of bulkiness and weight by having a uniquely designed compressor that may be driven by an extremely light weight engine. As reference to a somewhat similar type of compressor, attention is directed to Ser. No. 377,567 filed July 9, 1973 by C. Richard Gerlach and having the same assignee as the present invention.

SUMMARY OF THE INVENTION

Therefore, it is an object of the present invention to have a hand carried insecticide spraying apparatus.

It is another object of the present invention to provide a liquid chemical spraying apparatus with the mixing of the insecticide and air at some point remote from, and independently movable with respect to, the spraying apparatus.

It is even another object of the present invention to provide an ultra low volume chemical spraying apparatus having an internal power unit which may be carried during the spraying operation.

It is yet another object of the present invention to provide a spraying apparatus with a uniquely designed ultra low volume air compressor for providing a constant pressure output.

It is still another object of the present invention to provide a hand carried chemical spraying apparatus wherein the discharge nozzle is independently movable with respect to the main body of the apparatus with the chemical insecticide being mixed in the discharge nozzle.

It is still a further object of the present invention to provide a chemical spraying apparatus wherein a metering stem that controls the flow of the insecticide is contained within the nozzle housing and is movable therewith.

It is another object of the present invention to combine a nozzle capable of producing ninety-five percent of the mixture of insecticide and carrier liquid in droplets between the range of five microns to fifteen microns in diameter with a hand carried liquid chemical spraying apparatus.

BRIEF DESCRIPTION OF THE DRAWINGS

FIG. 1 is a perspective exploded drawing of the hand carried spraying apparatus.

FIG. 2 is a perspective drawing of the apparatus shown in FIG. 1 taken from the opposite side with the belt cover plate removed.

FIG. 3 is a cross sectional view of the discharge nozzle, nozzle housing and metering stem assembly shown in FIG. 1 and 2.

FIG. 4 is a front view of the discharge nozzle and metering stem assembly shown in FIG. 3.

FIG. 5 is a cross sectional view of the compressor shown in FIGS. 1 and 2.

FIG. 6 is an elevated view of the left side of the compressor shown in FIG. 5.

FIG. 7 is a perspective exploded view of an alternative embodiment for the hand carried liquid chemical spraying apparatus.

FIG. 8 is an elevated view of the rotating component in the compressor showing the design of the rotating vanes.

DESCRIPTION OF THE PREFERRED EMBODIMENT

Referring to FIG. 1 of the drawings, there is shown a perspective exploded view of the hand carried liquid chemical spraying apparatus designated generally by the reference numeral **10.** Generally, the spraying apparatus **10** consists of the carrying plate **12** to which are attached the major components including a gasoline engine **14,** a centrifugal compressor **16,** drive linkage **18** and spraying head **20.**

The power source which consists of the gasoline engine **14** is a conventional one cylinder engine that should be very light weight in design. The carburetor **22** is located on the top of the gasoline engine **14** with an air filter **24** being attached thereto. The spark for the gasoline in cylinder block **26** is provided by spark plug wire **28** upon pulling hand crank **29.** Cover plate **30** covers the outside portion of the gasoline engine. The gasoline tank **32** is secured to the nearest adjacent side of the gasoline engine **14** by appropriate mounting means such as screws, clamps or any other suitable means. A gasoline engine similar to the one just described is manufactured by O and R Engines, Inc. and has a manufacturing number designation of Series **20-A.** However, it should be realized that any other type of engine with suitable characteristics that is very light weight and having approximately the same horse power output rating would be very suitable for use with the present invention, with minor alterations being made for mounting.

The gasoline engine **14** is attached to carrying plate **12** by means of screws (not shown) that fit through holes **34.** The holes **34** are raised from the carrying plate **12** by means of bosses **36.** Within the center of the holes **34** is located a hole **38** through which the drive pulley **40** will connect to the drive shaft (not shown) of the gasoline engine **14.** Throttle lever **42** is connected to the carburetor **22** to control the speed of the gasoline engine **14** by means of linkage **44.** The throttle lever is attached to the carrying plate **12** by means of a screw **45** through hole **46** and into threaded hole **48** and boss **50** of the carrying plate **12.** A spring **52** holds tension on the throttle lever **42** to maintain the engine at a given speed.

The drive pulley **40** is connected to the drive shaft (not shown) of engine **14** through hole **38** and is keyed by slot **54** to prevent slippage with respect thereto. The hole **38** should be large enough so that the center hub **56** of pulley **40** does not rub against the carrying plate **12.** The outer surface **58** of the pulley **40** is crowned in the center so that a flat belt pulley **60** will automatically center itself on outer surface **58.**

A centrifugal compressor **16** which also is shown in a perspective assembly view in FIG. **1** is attached to the carrying plate **12** by means of bolts in threaded holes **64** on raised bosses **62.** A centrifugal compressor **16** is driven by a shaft **66** extending through hole **68** in carrying plate **12.** Cylindrical surface **70** of shaft **66** has a crowned center portion so that as flat belt **60** turns shaft **66,** it will continually center itself on cylindrical surface **70.** The shaft **66,** which extends through the stationary main housing **72,** is attached to the rotating impeller **74** by means of nut **76** and washer **78.** The compressor cover **80** fits over the rotating impeller **74** and bolts to the stationary main housing **72** by bolts **228.** Air drawn in by the centrifugal compressor **16** and pressurized by the rotating impeller **74** (as will be explained in more detail subsequently) is discharged through a semi-spiral duct **82.** A stretchable foam rubber filter **84** that will stretch over mounting flange **86** insures that dust and dirt particles will not be received in the compressor **16** by air that is being compressed.

The air being discharged by duct **82** is transmitted through a flexible hose **88** to the spraying head **20.** The hose **88** is attached to the end of duct **82** by means of a clamp **90** and to a spraying component **20** by means of a clamp **92.**

The spraying head **20** consists of a nozzle housing **94** that receives the compressed air from flexible hose **88** through the handle **96** having a conduit **98** running therethrough. In the front portion of the nozzle housing **94** is contained a discharge nozzle **100** for discharging insecticide contained within bottle **102** into the atmosphere. The insecticide contained within bottle **102** is drawn to nozzle **100** by means of a vacuum, as will be explained in more detail subsequently, through flexible tubing **104.** Cap **106** secures the bottle **102** to nozzle housing **94** via a metering stem assembly **108.** Inside the discharge nozzle **100** a vacuum is created by a venturi to draw the insecticide from bottle **102** through flexible tubing **104** and metering stem assembly **108** to be discharged into the atmosphere.

A hook **110** is bolted to carrying plate **12** through holes **112.** While using the spraying apparatus **10,** hook **110** is flipped back out of the way by pivoting on bolt **111** that fits through holes **112.** When the spraying head **10** is not in use, the hook **110** will pivot forward and rest against stop **114** to support the spraying head **20.** Stop **114** will butt against the end of carrying plate **12.**

Since the most practical way of manufacturing the carrying plate is by casting. Legs **116** and handles **118** are cast as an integral part of the carrying plate. Only two of four legs are shown in FIG. **1.** The legs **116** have rubber grommets **120** to prevent the scarring of any surface on which the spraying apparatus **10** may be set. The handles **118** have a hand grip **122** extending therebetween and being retained in place by eye bolts **124** that may be used to attach a carrying strap (not shown) to aid in the carrying of the spraying apparatus **10** while using for a continuous period of time.

Referring now to FIG. **2,** there is shown an assembly drawing of the hand carried liquid chemical spraying apparatus **10** as shown in FIG. **1** with the belt cover plate **126** removed. A portion of the many components described and numbered in FIG. **1** will be likewise numbered in FIG. **2** without further description or comment thereon. The belt cover plate **126** is attached to the carrying plate **12** by means of bolts **128** extending through holes **130** into threaded spacers **132** that are formed as an integral part of the casting for carrying plate **12.** The threaded spacers **132** should be long

enough to hold the belt cover plate **126** off of flat belt **60**, pulley **40** and shaft **66**.

Referring now to FIGS. 3 and 4 in combination, there are shown more detailed drawings of the spraying head **20**. Like numerals as were used in FIG. 1 will also be used in FIGS. 3 and 4. The nozzle housing **94** is connected to conduit **98** by means of a press fit inside of cylindrical flange **134**. The front portion of nozzle housing **94** has a cylindrical mounting flange **136** to which a face plate **138** is attached by means of countersunk screws **140**. A sealing gasket **142** is contained between face plate **138** and cylindrical mounting flange **136**. The face plate **138** which is circular has a hole **144** in the center thereof.

Around the hole **144** of face plate **138** is an annular center plate **146** having an inward flange **148**. The inward flange **148** abutts the edges of hole **144** to hold the center plate **146** into position. Countersunk bolts **150** extend through the center plate **146** and the face plate **138** and screw into nozzle body **152**.

The nozzle body **152**, which has holes to receive countersunk screws **150**, has an outer flange **154** that butts against the inside of face plate **138**. Within the outer flange **154** are a series of converging spiral passages **156** that receive pressurized air from chamber **158** of nozzle housing **94** and transfers the pressurized air to the center of the nozzle body **152**. The flow of pressurized air through the converging spiral passages create an air vortex at the discharge end of mixing chamber **160**. The mixing chamber **160** is in direct communication with pressurized chamber **158** through orifice **162**. Nozzle body **152** also has a hole that receives metallic conduit **164** in an airtight relationship to prevent air leakage from pressure chamber **158**. Because of pressurized air flowing from pressure chamber **158** through orifice **162** a vacuum is created within metallic conduit **164**. This vacuum in metallic conduit **164** will draw insecticide therethrough into the mixing chamber **160**. While in mixing chamber **160**, the turbulence created by orifice **162** will mix the insecticide with the pressurized air flowing from pressure chamber **158**. However, before the pressurized air and insecticide can leave mixing chamber **160** by the discharge end, it must pass through the air vortex created by converging spiral passages **156**. While passing through the air vortex immediately prior to discharge through the opening surrounded by inward flange **148** of center plate **146**, the air vortex created by the converging spiral passages **156** overcomes the surface tension of the insecticide and the carrier fluid, both at ambient temperature, to break the liquid particles into droplets having a diameter of between five microns and fifteen microns. Tests on this type of discharge nozzle **100** have shown that ninety-five percent of the liquid drawn through metallic conduit **164** and discharged out the nozzle **100** will be between five microns and fifteen microns in diameter.

The size range of between five and fifteen microns in diameter is extremely important because droplets that exceed fifteen microns in diameter will very quickly sink to the ground after being dispensed out nozzle **100**. Droplets below the size of five microns would flow with the air current around an insect, such as a mosquito, and never come into contact with the insect. By using the size range of between five and fifteen microns in diameter the insecticide carrying particles tend to float in the atmosphere until such time as they come into contact with an insect without rapidly sinking to the earth.

Going back to FIGS. 3 and 4 in combination, the metallic conduit **164** is connected to a flexible hose **166** that extends down into cylindrical flange **168** which is a part of metering housing **170** of metering stem assembly **108**. Control block **170** has a passage **172** extending therethrough with a positionable metering stem **174** being contained therein. Within the positionable metering stem **174** there is contained a series of orifices **176, 178, 180, 182**, with each successive orifice being smaller than the previous orifice. By pushing the positionable metering stem **174** to the position where the desired orifice **176, 178, 180, 182** is in position with passage **172**, the amount of insecticide flowing through metallic conduit **164** into mixing chamber **160** can be controlled without varying the pressure of air in the pressure chamber **158**. The metering stem **174** is held in the desired position relative to each orifice **176, 178,** 180, 182 by a spring loaded ball detent **187**. Notches **184** and **186** are not cut through metering stem **174**. Therefore, when notch **186** is located under spring loaded ball detent **187**, flow of insecticide is stopped because notch **184** is now in line with flexible tubing **104** and flexible hose **164**. Also, by simply rotating the positionable metering stem **170** by means of lever **188** the flow of the insecticide can be stopped. Lever **188** can be turned by the index finger of the hand without ever setting down the spraying head **20**. Flexible tubing **104** that extends down into bottle **102** is in airtight communication with the lower portion of passage **172**. It should be understood that flexible tubing **104** extends to the bottom of bottle **102** so that the entire contents thereof may be used up. Cap **106** is retained to metering housing **170** by means of flange **190**. To prevent a vacuum from building up inside bottle **102** due to the removal of insecticide through tubing **104**, an air passage **192** has been provided in metering housing **170**. The cap **106** is of the normal screw type commonly used. The metering housing **170** has an airtight fit inside of cylindrical flange **194** of nozzle housing **94** and is stationary with respect thereto.

Referring now to FIG. **5**, there is shown a cross sectional view of the centrifugal compressor **16**. As previously mentioned, the shaft **66** has a substantially cylindrical surface **70** with a crowned center portion to insure that the flat belt **60** stays centered thereon. The shaft **66** extends through the stationary main housing **72** of the centrifugal compressor **16**. Outer bearing **196** is held against shoulder **198** of shaft **66** by bearing spacer **200**. At the opposite end of bearing spacer **200** is the inner bearing **202** that is retained into position by retaining rings **204** and **206**. On the end of shaft **66** is the rotating impeller **74** which is attached thereto by means of nut **76** and washer **78**. The rotating impeller **74** has vanes **208** that rotate therewith. The vanes **208** can have many different types of design; however, the vanes in U.S. Pat. application Ser. No. 377,567 filed July 9, 1973 are related to the vanes in the present compressor and is hereby incorporated by reference. For the purposes of illustration, FIG. **8** shows one possible design of the vanes **208** with the direction of rotation being in the counterclockwise direction. Notice the vanes **208**, which have a flat upper surface **209**, tend to spiral inward in the counterclockwise direction. The vanes **208** have a small inner cross section **211** that tends to expand outward at the midpoint **213** of the

vane and narrows back to a small tip **215** along the outer circumference of the rotating impeller **74.**

As the air is drawn in around posts **210,** which are cast as an integral part of the stationary main housing **72,** it flows between vanes **208** and through stationary diffuser vanes **214** which can be seen more clearly in FIG. **1.** While flowing through stationary diffuser vanes **214** and around inner plate **216** of compressor cover **80** into annular space **218** the air is pressurized. The inner plate **216** has an annular channel **220** with very little space between its inner surface and stationary diffuser vanes **214** to prevent air loss and to direct the pressurized air. The air contained within annular space **218** is at a pressure of approximately four pounds per square inch and is accurately controlled by the rotational velocity of the rotating impeller **74.** From the annular space **218** the pressurized air flows out the semi-spiral duct **82** that is in fluid communication therewith.

It should be noted that the bearings **196** and **202** are self sealing to prevent dust or dirt from reaching the bearing surfaces of the shaft **66** or the inner portion of the stationary main housing **72.** Also, the mounting flange **86** of stationary main housing **72** has a lower hole **222** located therein with slotted holes **224** located in the upper portion thereof. The slotted holes as can be seen in FIG. **1** allow a person to adjust the centrifugal compressor **16** for ease in tightening or loosening the flat belt **60.** The slotted holes could have been just as easily provided in carrying plate **12** with the threaded holes being in mounting flange **86.** The stretchable filter **84** will stretch over flange **86** and fill the space between flange **86** and annular flange **212.** The stretchable filter **84** is the normal porous type to allow the flow of air therthrough and at the same time remove the particles contained therein.

Referring to FIG. **6,** the construction of the compressor cover **80** can be more easily shown. The semi-spiral duct **82** extends a part of the way around the compressor cover **80** for better communication with annular space **218.** The outer wall **226** of the compressor cover **80** is secured to annular flange **212** by means of bolts **228.** As many bolts as are necessary for a good connection therebetween will be used.

METHOD OF OPERATION

For the proper operation of the device shown in FIG. **1** the bottle **102** is filled with a suitable insecticide and the gasoline tank **32** of the engine **14** is filled. Engine **14** is then cranked and throttle lever **42** adjusted until the pressure indicated by the pressure meter **230** is approximately four psi. Normal operation of the engine **14** and subsequent driving of the centrifugal compressor **16** by means of flat belt **60** will cause a pressure in the semi-spiral duct **82** of approximately four psi. Adjustment of the throttle lever **42** will give the fine tuning desired for either a slight increase or slight decrease in pressure. Anywhere from three to five psi may be used with five psi insuring that more droplets will be toward the five micron range and the three psi insuring that more droplets will be toward the fifteen micron range. The desired amount of insecticide flow is controlled by adjusting the positionable metering stem **174** of the metering stem assembly **108.** The smaller the orifice used in the metering stem **174,** the less the amount of insecticide that will flow. If for some reason while the engine **14** is running no insecticide flow is desired, by simply flipping the lever **188** to the horizontal position the flow of insecticide will be stopped. Because of the flexible nature of the flexible hose **88** and the lightness of the overall design, an operator of the spraying apparatus may simply pick up the unit with one hand and control the spraying operation with the other hand by gripping handle **96** therein. The index finger can control the operation of the lever **188.** The mixing of the insecticide with the pressurized air to break down the particles to the desired range is movable with respect to the main body of the spraying apparatus attached to carrying plate **12.** Previously this was impossible in commercial insecticide sprayers.

Because of the specially designed spraying head **20** and centrifugal compressor **80,** both the body of the spraying apparatus and the power source may be hand carried in one hand with the spraying operation taking place in the other hand. Previous commercial units were so bulky and heavy that the main unit of the spraying apparatus could not be carried, and the spraying head **20** was not movable with respect thereto with the insecticide being broken down to the desired particle range immediately prior to discharge.

Referring now to FIG. **7,** there is shown an alternative embodiment of the hand carried liquid chemical spraying apparatus as shown in FIG. **1.** The engine **232** has a direct drive coupling with lobe compressor **234.** Between coupling elements **236** and **238** of engine **232** and lobe compressor **234,** respectively, is located a rubber spider that has notched outer flanges **242** and **244.** Notched outer flange **242** fits in a mating notched flange **246** of coupling element **236.** Correspondingly, notched outer flange **244** mates with notched flange **248** of coupling element **238.** It should be understood that the rubber spider **240** allows for a direct drive means between the engine **232** and the lobe compressor **234** without the vibrations being transmitted therebetween. The engine **232** is attached to structure box **250** by means of screws or any other suitable attachment. Likewise lobe compressor **234** has a structure mount **252** for attachment with structure box **250.**

Air for the lobe compressor **234** is drawn in through opening **254** by means of filter **256** contained between mounting plate **258** and washer **260.** The compressed air from the lobe compressor **234** is discharged through flange cylinder **262.** A washer **264** is located between flange cylinder **262** and lobe compressor **234.** From one side of flange cylinder **262** the pressurized air flowing therethrough is connected by means of coupling **266,** rubber hose **267** and screw conduit **268** into insecticide tank **270.** The insecticide tank **270** is formed from the structure box **250** by having a sealing plate **272** blocking off an end portion. The connection between coupling **266,** rubber hose **267,** screw conduit **268** and insecticide tank **270** must be airtight, with the pressurized air being discharged immediately inside the insecticide tank **270.**

Also inside the insecticide tank **270** is located a conduit **274** that extends to the bottom thereof. Coupling **276** connects the conduit **274** to a rubber hose **278** and, subsequently, to flange cylinder **262.** Inside of flange cylinder **262** there is a flexible conduit **280** that is in fluid communication with conduit **274** for receiving insecticide from insecticide tank **270.**

On the end of flange cylinder **262** is attached a flexible hose **282** by means of a clamp **284.** The air pressurized by the lobe compressor **234** flows through flange cylinder **262** and flexible hose **282** plus creating pres-

sure in insecticide tank 270 through coupling 266, rubber hose 267 and screw conduit 268.

The flexible hose 282 is connected to nozzle housing 286 via handle 288 in a manner similar to the previous description with respect to FIGS. 3 and 4. It should be realized that the flexible conduit 280 is contained within flexible hose 282 and handle 288, and continues into nozzle housing 286. After flexible conduit 280 reaches the inside of nozzle housing 286, flow therethrough is controlled by a knob 292 of an internal metering valve. Afterwards, it is connected to the nozzle 290 in a manner similar to the connection of flexible hose 166 as described in conjunction with FIGS. 3 and 4. Only because the vacuum pressure created within the nozzle may not be sufficient to draw the insecticide through flexible conduit 280 all the way to the nozzle 290 was the pressure connected to the insecticide tank made via coupling 266.

The metering that was controlled by metering valve 108 in FIG. 3 is now controlled by a knob 292 contained on the rear of nozzle housing 286. Knob 292 controls a valve that interrupts flexible conduit 280 immediately prior to connection to the nozzle 290 with the difference between the control of knob 292 and metering valve 108 being that knob 292 controls a screw type adjustable valve.

Again the pressure generated by the lobe compressor 234 is determined by the speed of the engine 232. By increasing the engine speed, the pressure output of the lobe compressor 234 will be increased and the size of the particles discharged out nozzle 290 will be reduced. By slowing down the engine 232, the pressure of the air from lobe compressor 234 will be reduced, and the size of the insecticide particles dispersed out nozzle 290 will be increased. Again, the optimum pressure for operating this type of device is approximately four pounds per square inch. Since the insecticide tank 270 is under pressure, the cap 294 should be airtight to prevent escape of the pressure. The pressure meter 230 shown in FIG. 5 may be mounted on either the flange cylinder 262 the insecticide tank 270 or the nozzle housing 286 according to the preference of the individual. All that is necessary is that a pressure reading be available so that the engine speed can be adjusted accordingly.

Handle 296 is attached to a V type of structure 298 by means of handle bracket 300. The V type structure 298 is bolted to structure box 250 for ease of carrying the spraying apparatus.

What is claimed is:

1. A portable insecticide aerosol generator comprising:
   a. a source of air;
   b. a source of insecticide;
   c. means for pressurizing said source of air to a substantially constant pressure;
   e. chamber means remote from said pressurizing means for receiving said substantially constant pressure air, said chamber means being independently movable with respect to said pressurizing means;
   f. nozzle means forming a portion of said remote chamber means and in communication therewith; and
   g. conduit means connecting said insecticide source to said nozzle means for communication therewith;
   h. said insecticide being drawn into said nozzle means via said conduit means by vacuum force, mixed in said nozzle means remote from said pressurizing means, and dispersed from said nozzle means in a mist created by a turbulence therein to break the insecticide into small particles.

2. The portable insecticide aerosol generator as recited in claim 1 wherein said aerosol generator is hand carriable including a source of power for driving said pressurizing means.

3. The portable insecticide aerosol generator as recited in claim 2 wherein said nozzle means includes an orifice in communication with said chamber means for creating said vacuum force and starting said turbulence, and air vanes in communication with said chamber means oriented around said nozzle to create an air vortex in said nozzle means thereby increasing said turbulence immediately prior to dispersing of said insecticide from said nozzle means.

4. The portable insecticide aerosol generator as recited in claim 3 wherein said pressurizing means includes a low volume compressor having a housing enclosing an impeller, an air inlet for said source of air being between bearing means and air foil vanes for said impeller, said air foil vanes having a flat outer surface.

5. The portable insecticide aerosol generator as recited in claim 4 wherein said power source is a petroleum operated engine with a belt drive for turning said impeller, said belt being of the flat type that self centers on a crowned center portion of pulley means for said engine and compressor.

6. The portable insecticide aerosol generator as recited in claim 5 includes a carrying plate to which said engine and compressor are attached.

7. The portable insecticide aerosol generator as recited in claim 3 wherein said substantially constant pressure air is controlled by varying said source of power that drives said pressurizing means.

8. The portable insecticide aerosol generator as recited in claim 7 wherein said source of insecticide is attached to said chamber means and is movable therewith.

9. The portable insecticide aerosol generator as recited in claim 7 wherein said source of insecticide is attached to support structure for holding said pressurizing means and said source of power, said conduit means being contained within said substantially constant pressure air.

10. The portable insecticide aerosol generator as recited in claim 8 wherein the quantity of insecticide flowing from said source out said nozzle means is controlled by a positionable metering valve located in said conduit means.

* * * * *