Office de la Propriété Intellectuelle du Canada
Un organisme d'Industrie Canada

Canadian Intellectual Property Office
An agency of Industry Canada

CA 2224010 C 2007/05/15

(11)(21) 2 224 010

(12) BREVET CANADIEN
CANADIAN PATENT

(13) C

(86) Date de dépôt PCT/PCT Filing Date: 1996/06/06
(87) Date publication PCT/PCT Publication Date: 1996/12/27
(45) Date de délivrance/Issue Date: 2007/05/15
(85) Entrée phase nationale/National Entry: 1997/12/08
(86) N° demande PCT/PCT Application No.: DE 1996/001043
(87) N° publication PCT/PCT Publication No.: 1996/041980
(30) Priorité/Priority: 1995/06/09 (DE195 21 916.3)

(51) Cl.Int./Int.Cl. *F16J 15/08* (2006.01), *F16K 1/226* (2006.01)

(72) Inventeur/Inventor:
STARKE, WILFRIED, DE

(73) Propriétaire/Owner:
MANNESMANN AKTIENGESELLSCHAFT, DE

(74) Agent: FETHERSTONHAUGH & CO.

(54) Titre : DISPOSITIF ASSURANT L'ETANCHEITE ENTRE DES PARTIES MOBILES EN CONTACT MUTUEL
(54) Title: SEALING DEVICE BETWEEN MOVABLE PARTS IN MUTUAL CONTACT

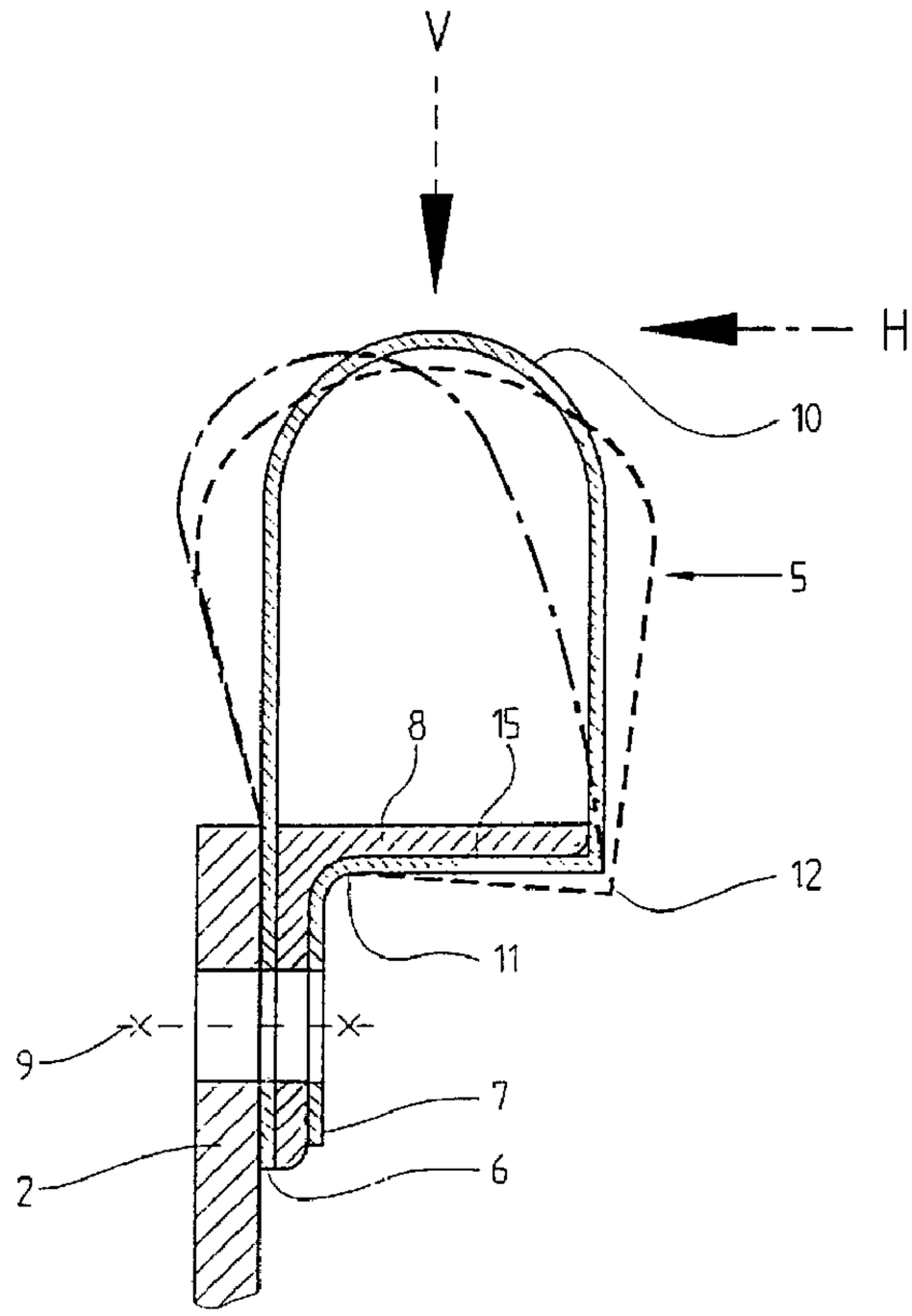

(57) Abrégé/Abstract:
Device for sealing between two assembly parts (1, 2) movable relative to one another, especially between two damper blades or a damper blade and a stop of a flue gas armature, containing an elastic sealing element formed by a spring-steel strip (5), which

(57) Abrégé(suite)/Abstract(continued):
contains two flat clamping edges (6, 7) arranged next to one another in a parallel fashion and pointing to the same side and securable by means of a clamping device (9) on one side to one of the assembly parts (1 or 2), as well as sealing zone (10) curved in an arc-shaped manner, whereby the sealing element (5) rests, with a resting surface located outside of the clamping edges (6, 7), flatly on the flat supporting surface (15) of a supporting element (8), and the supporting element (8) is also securable by means of the clamping device (9) to one of the assembly parts (1 or 2), and whereby the other assembly part (2 or 1) comes into contact with the sealing element (5) in the top area of the sealing zone (10) curved in an arc-shaped manner and the relative movement between the two assembly parts (1, 2) occurs roughly tangentially relative to this top area. According to the invention, the supporting element (8) is located inside of the space enclosed by the curved sealing element (5).

70 520

Abstract

Device for sealing between two assembly parts (1, 2) movable relative to one another, especially between two damper blades or a damper blade and a stop of a flue gas armature, containing an elastic sealing element formed by a spring-steel strip (5), which contains two flat clamping edges (6, 7) arranged next to one another in a parallel fashion and pointing to the same side and securable by means of a clamping device (9) on one side to one of the assembly parts (1 or 2), as well as sealing zone (10) curved in an arc-shaped manner, whereby the sealing element (5) rests, with a resting surface located outside of the clamping edges (6, 7), flatly on the flat supporting surface (15) of a supporting element (8), and the supporting element (8) is also securable by means of the clamping device (9) to one of the assembly parts (1 or 2), and whereby the other assembly part (2 or 1) comes into contact with the sealing element (5) in the top area of the sealing zone (10) curved in an arc-shaped manner and the relative movement between the two assembly parts (1, 2) occurs roughly tangentially relative to this top area. According to the invention, the supporting element (8) is located inside of the space enclosed by the curved sealing element (5).

Figure 1

29882-7

Sealing Device Between Movable Parts in Mutual Contact

Description

The invention relates to a device for sealing between two assembly parts that are movable relative to one another.

From DE 38 15 402 A1, a device for sealing the contact zone between a movable shut-off element of a pipeline and a stationary seat is known, which uses an elastic seal in the form of an elongated spring-steel strip in the sealing area. Outside of the arched sealing zone, in the longitudinal direction of the sealing element, the spring-steel strip has two bends. The two longitudinal edge areas of the spring-steel strip point to the same side and are placed one atop the other, as clamping edges, and can be attached on one side to the movable shut-off element or to the stationary seal seat by means of a clamping device (e.g., a screw connection). This seal has proved to be very effective, particularly when the relative movement which occurs between the spring-steel strip and the matching seal seat during the closing process is roughly vertical relative to the arched sealing zone. In cases when the relative movement during closing is more tangential relative to the arched sealing zone, situations of extreme stress for the spring-steel seal sometimes develop, which can result in the spring-steel strip being lifted up from the supporting surface and, in consequence, in breakage of the spring-steel strip.

In order to avoid negative consequences of this type, it is known from WO 95/02136 to provide a supporting profile in the interior of the sealing element. This supporting profile,

which serves as a hold-down device, rests on the supporting surface of the spring-steel strip near the bend farthest from the clamping point and prevents the strip from lifting up. The hold-down device can be designed, for example, as a roughly V-shaped profile, and it is secured between the clamping edges of the spring-steel strip by means of the clamping device. Because extraordinarily corrosive conditions frequently occur in flue gas fittings, the hold-down device, like the spring-steel strip, must be made of high-alloy material, making it quite expensive. It is also disadvantageous that when a large-area flue gas damper equipped with one of the known sealing elements is opened, the break-away torque resulting from the hold-down device can be undesirably high.

The object of the invention is to further develop a generic device in such a way that it is possible, upon reaching the closed position, to reliably avoid the impermissible lifting and deformation of the spring-steel strip by tangential side-forces, at the lowest possible material and assembly expense, without impermissibly detracting from the required elastic deformability of the sealing element; rather, the seal is to be more flexible, i.e., softer, in nature, in order to achieve a reduction in the break-away torque.

In accordance with the present invention, there is provided a device for providing a seal between two plant components movable relative to one another, in particular between two valve leaves or a valve leaf and a limit stop for a flue gas fitting, comprising a resilient sealing element which is formed of a spring steel strip and comprises, together with an arcuately curved sealing zone, two flat anchoring edges arranged in parallel next to each other, directed towards the same side and attachable on one

side of the one plant component by means of a clamping device, the sealing element resting flat on the flat bearing surface of a supporting member via a supporting face located externally of the anchoring edges and formed of at least one bend between at least one of the anchoring edges and the sealing zone and the supporting member likewise being attachable to the one plant component by means of the clamping device and the other plant component coming into contact with the sealing element in the apex area of the arcuately curved sealing zone and the relative movement between the two plant components occurring approximately tangentially to this apex area, wherein the supporting member is arranged inside the space enclosed by the curved sealing element.

The invention is explained in greater detail in reference to the drawings. The drawings show:

Fig. 1 A cross-section through a sealing device according to the invention with an L-profile as a supporting element and indicated deformation lines;

Fig. 2 A cross-section through a sealing device as in Fig. 1 with an additional washer element;

Fig. 3 A cross-section through a device according to the invention with a holding strip as a supporting element;

Fig. 4 A known sealing arrangement.

A sealing arrangement according to the prior art as in WO 95/02136 is shown in Fig. 4. The two assembly parts that move relative to one another and must be sealed off from one another are identified by reference numbers 1 and 2. These assembly parts may be, for example, a shut-off damper 1, which is swung into its sealing position in a fashion roughly tangential relative to the stationary assembly part 2 with the spring-steel strip 5, which is indicated by the solid upper curved arrow. Of course, the spring-steel strip 5 could also be attached to the moved assembly part in an alternate manner. This is indicated by the lower curved arrow in dashed lines. Naturally, it is also possible to equip both of the movable assembly parts with suitable spring-steel strips 5. Furthermore, it is often the case, as with multileaf dampers, that two immediately adjacent damper blades are brought into the closed position, i.e., that both assembly parts 1, 2 are moved at the same time. In such a case, in addition to the normal forces (sealing force), significant tangential side-forces also occur.

The spring-steel strip 5 has a sealing zone 10 curved in an arc-shaped fashion. The two longitudinal edges of this spring-steel strip 5 point to the same side and lie atop one another in parallel fashion as the clamping edges 6, 7. Between the clamping edge 7 and the sealing zone 10, two bends 11, 12 of 90° each are formed in the spring-steel strip 5, parallel to its longitudinal edges. As a result, a supporting surface is formed on the spring-steel strip 5; this supporting surface rests flatly on a corresponding supporting surface 15 of a supporting element 8, which has an L-profile in cross-section, and supports the spring-steel strip 5 in the closed position against the sealing force. The vertical leg of this L-profile presses the two clamping edges 6, 7 against the assembly part 2 by means of a clamping device 9 (e.g., a screw connection) and thus fixes the spring-steel strip 5 in place on one side on the assembly part 2. In order to prevent the spring-steel strip 5 from lifting up from the supporting surface 15 in the area of the bend 12 when the assembly part 1 swings into the closed position, a V-shaped profile 4 is provided as a hold-down device, [which] presses on the supporting surface in the interior of the arched spring-steel strip 5 in the area of the bend 12. The V-profile 4 is fixed in place between the clamping edges 6, 7 by means of the clamping connection 9. Figure 8 shows the spring-steel strip 5 in the non-deformed state.

In contrast to the generic prior art, in which the supporting element 8, seen in the direction of the sealing force, is located underneath the sealing element 5, i.e., outside of the constructive area enclosed by the sealing element 5, in the embodiment according to the invention this supporting element 8 is arranged inside the constructive area enclosed by the sealing element 5. This is illustrated in Figures 1 to 3, which will be described in greater detail below. The same reference numbers as those used in Fig. 4 will be used for parts with the same functions.

The sealing device shown in cross-section in Fig. 1, which is clamped by means of a screw connection 9 onto the moving or non-moving assembly part 2 on one side, has an L-profile as the supporting element 8. The vertical leg of the L-profile is securely connected to the assembly part 2 by the screw connection 9. The sealing element formed by the spring-steel strip 5 lies with its arched sealing area 10 over the other (horizontal) leg of the supporting element 8. While the spring-steel strip 5 is executed in a completely smooth manner between the sealing zone 10 and the left clamping edge 6, it has two bends 11, 12, preferably of 90° each, in its right-hand portion between the sealing zone 10 and the clamping edge 7. The distance between these two bends 11, 12 corresponds to the width of the supporting surface 15 on the lower side of the horizontal leg of the supporting element 8. In the non-stressed state, therefore, this portion (resting surface) of the spring-steel strip 5 located outside of the clamping edges 6, 7 rests completely flatly on the supporting surface 15. Figure 1 also shows, qualitatively, how the spring-steel strip 5 is deformed by a force component V (dashed line) acting vertically on the sealing zone 10 or by a force component H (dot-dashed line) oriented tangentially to the sealing zone 10. These two force components act when the sealing device is brought into its closed position. It can be seen that the spring-steel strip 5 cannot be lifted up by tangential side-forces H upon closing. If the tangential side-force H acts in the opposite direction, as happens when a shut-off damper is opened, the spring-steel strip 5 yields to the right, so that the required break-away torque is significantly reduced. After the shut-off damper has been moved out of the sealing seat, the spring-steel strip 5 springs back into its initial position and rests on the

supporting surface 15. Furthermore, the sealing device according to the invention possesses sufficient elasticity to absorb the vertically-acting sealing forces V. In order to increase rigidity against these sealing forces in special cases, it may be advantageous to securely hold the spring-steel strip 5 with its lower side on the supporting surface 15, over a partial area of the supporting surface 15, by means of a suitably shaped washer element 14 that can also be secured by the screw connection 9. These washer elements 14 may be arranged continuously or separated from one another and can be designed, for example, as suitably curved washer discs.

Figure 3 shows, in cross-section, a sealing device according to the invention that functions in principle in the same manner as that in Figure 2. The only difference is that instead of an L-profile, a simple flat (planar) holding strip is used as the supporting element 8. Mentally, Figure 3 is obtained from Figure 2 by swinging the vertically-drawn profil leg of the supporting element 8 by 90° clockwise into the plane of the other leg. In this way, bend 11 is eliminated, and a bend 13 is created between the clamping edge 6 and the sealing zone 10. In terms of deformation, this embodiment behaves exactly like that in Figure 2 or, when the washer element 14 is omitted, like that in Figure 1.

In cases when the areas to be sealed off have a very large longitudinal extension, it is advisable for the sealing device according to the invention to be composed of partial pieces of a standard length (e.g., 1 m). The individual partial pieces are placed so as to abut one another at their end faces. In order to ensure that in each case both of the two abutting ends behave in the same manner, it is advisable to provide one end of a partial length, on its inner side or outer side, with a narrow affixed spring-steel strip, so that the corresponding end of the next partial piece can be slipped in or on in an exactly aligned manner, in the sense of a sleeve connection. It is advantageous to limit the length of this additional spring-steel strip in such a manner that it runs outside of the clamping points and bends, i.e., essentially only in the area of the sealing zone 10 and the two attached side areas. Alternatively, an additional

spring-steel strip of this type could also be placed externally over the abutment area and secured accordingly.

29882-7

CLAIMS:

1. A device for providing a seal between two plant components movable relative to one another, in particular between two valve leaves or a valve leaf and a limit stop for a flue gas fitting, comprising a resilient sealing element which is formed of a spring steel strip and comprises, together with an arcuately curved sealing zone, two flat anchoring edges arranged in parallel next to each other, directed towards the same side and attachable on one side of the one plant component by means of a clamping device, the sealing element resting flat on the flat bearing surface of a supporting member via a supporting face located externally of the anchoring edges and formed of at least one bend between at least one of the anchoring edges and the sealing zone and the supporting member likewise being attachable to the one plant component by means of the clamping device and the other plant component coming into contact with the sealing element in the apex area of the arcuately curved sealing zone and the relative movement between the two plant components occurring approximately tangentially to this apex area, wherein the supporting member is arranged inside the space enclosed by the curved sealing element.

2. A device according to claim 1, wherein two bends are provided externally of the sealing zone in the longitudinal direction of the sealing element and the inside of the sealing element rests flat on the underside of the supporting member in the area between the one bend and the associated anchoring edge.

3. A device according to claim 2, wherein the two bends are arranged on the same side of the sealing element between the sealing zone and the corresponding anchoring

edge at a distance corresponding to the width of the bearing surface of the supporting element.

4. A device according to claim 3, wherein the supporting element takes the form of an L-shaped profile, the inside of the first leg of the L-shaped profile forming the bearing surface and the second leg of the L-shaped profile anchoring the two anchoring edges to the plant component by means of the clamping device.

5. A device according to claim 2, wherein the supporting element takes the form of a flat retaining strip, in that the two bends are arranged on opposing sides of the sealing element relative to the sealing zone, and in that the retaining strip anchors the two anchoring edges to the plant component by means of the clamping device, the supporting element extending as far as one bend.

6. A device according to any one of claims 1 to 5, wherein the sealing element is secured to the rear of the bearing surface of the supporting element over part of the width of the bearing surface of the supporting member by means of a backing member.

7. A device according to any one of claims 1 to 6, wherein the sealing element is composed of mutually abutting sections and each abutment joint area is overlapped by a plug-in sleeve consisting of a spring steel strip.

FETHERSTONHAUGH & CO.
OTTAWA, CANADA

PATENT AGENTS

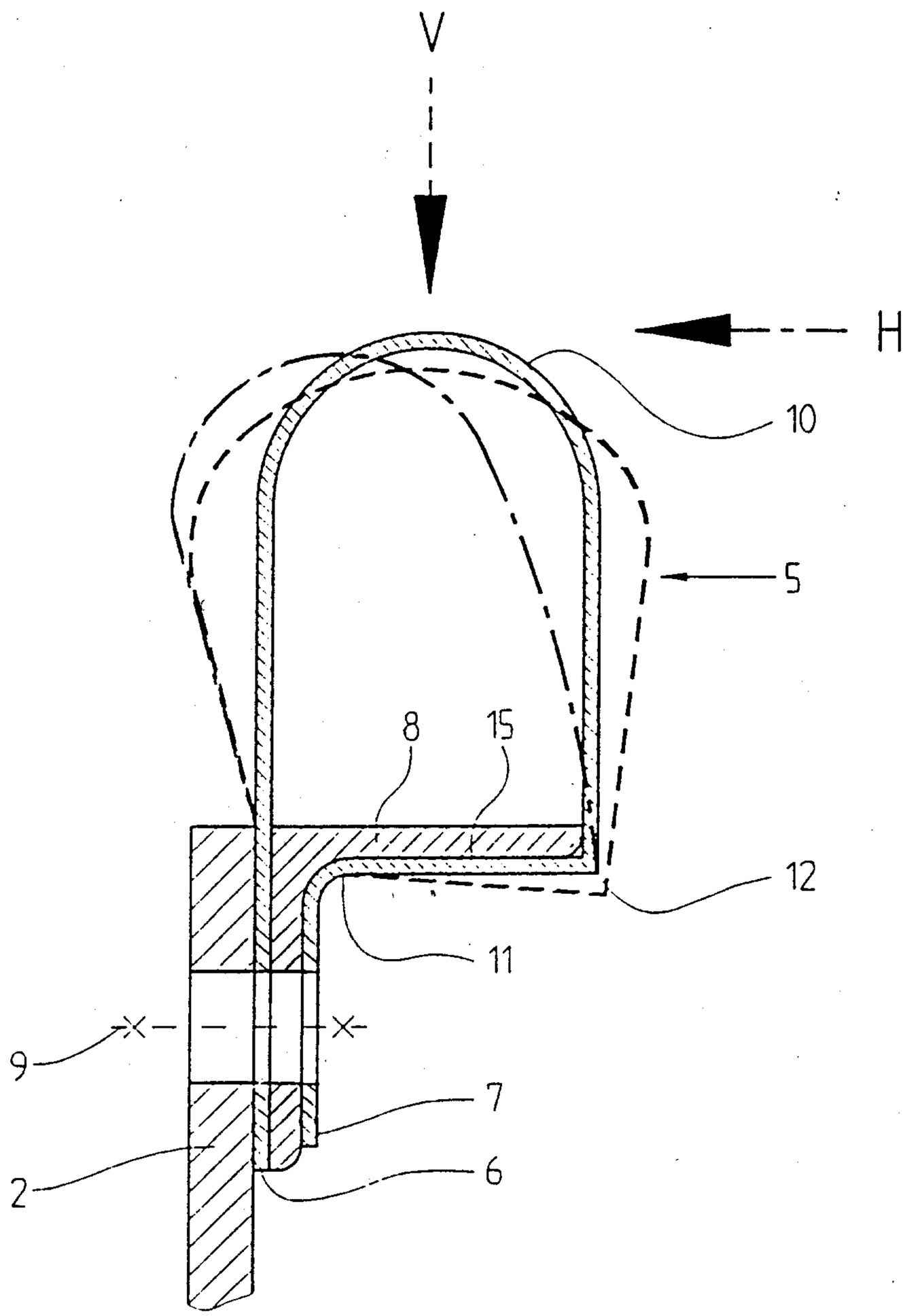

Fig. 1

Patent Agents
Fetherstonhaugh & Co.

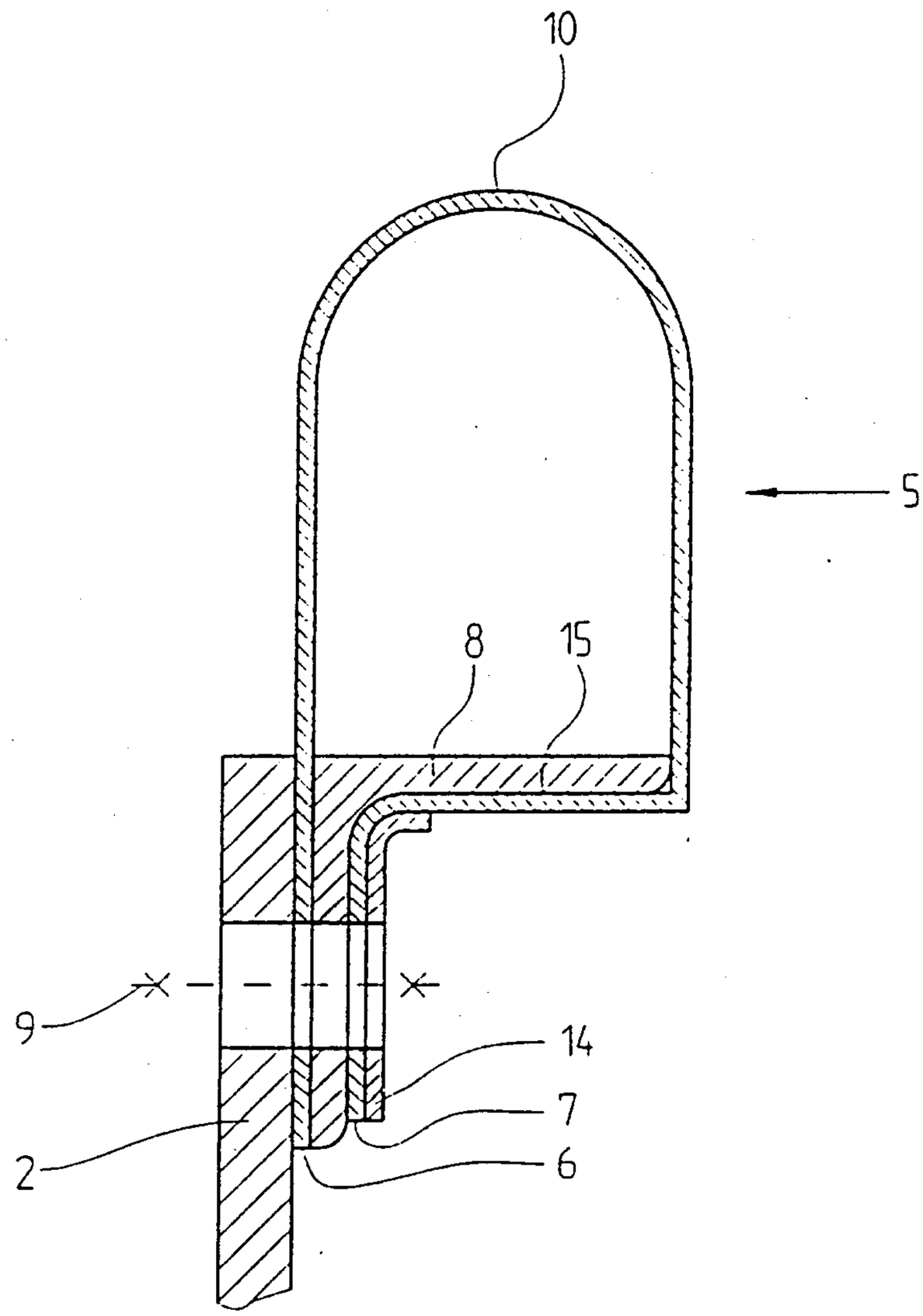

Fig. 2

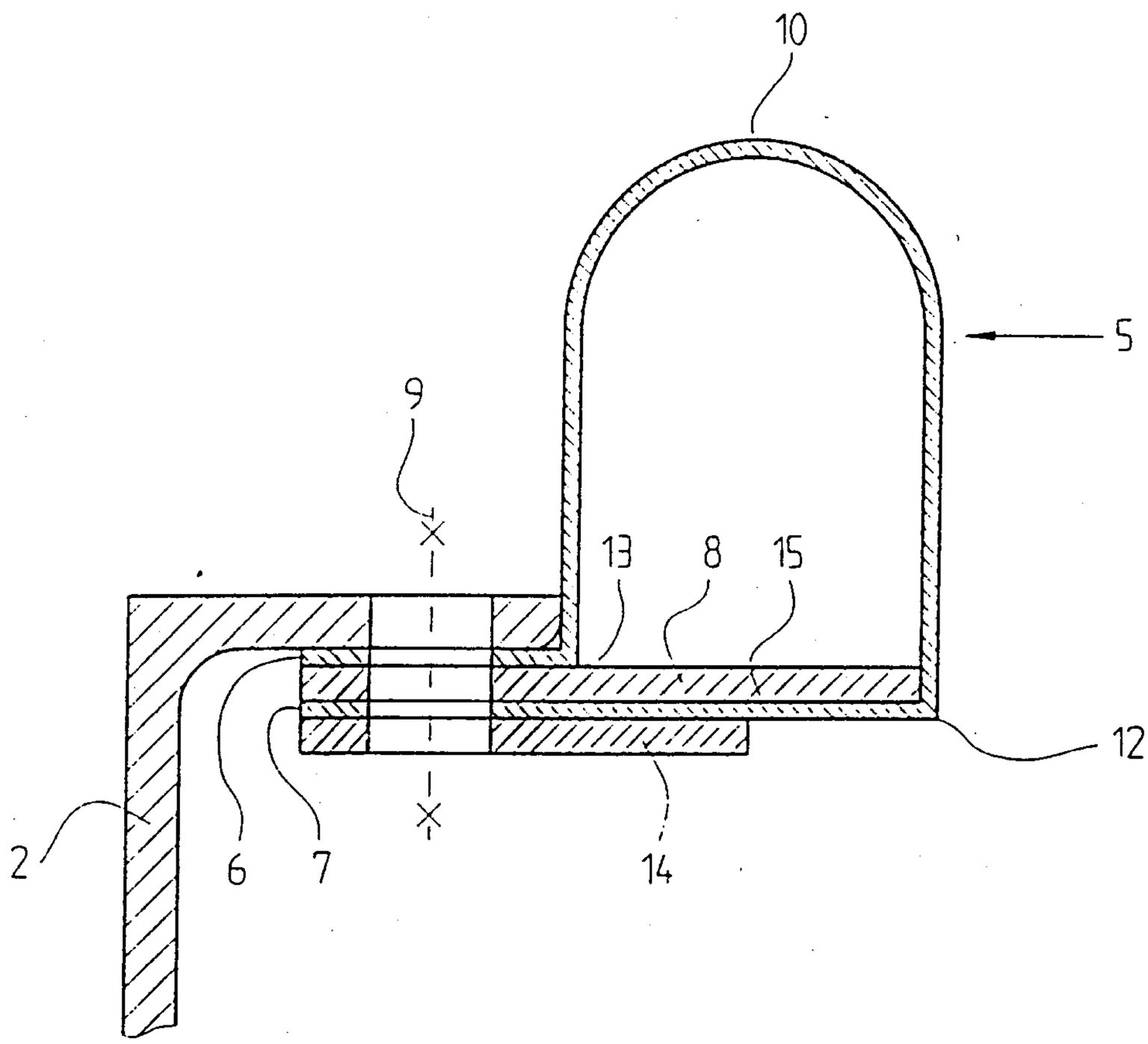

Fig. 3

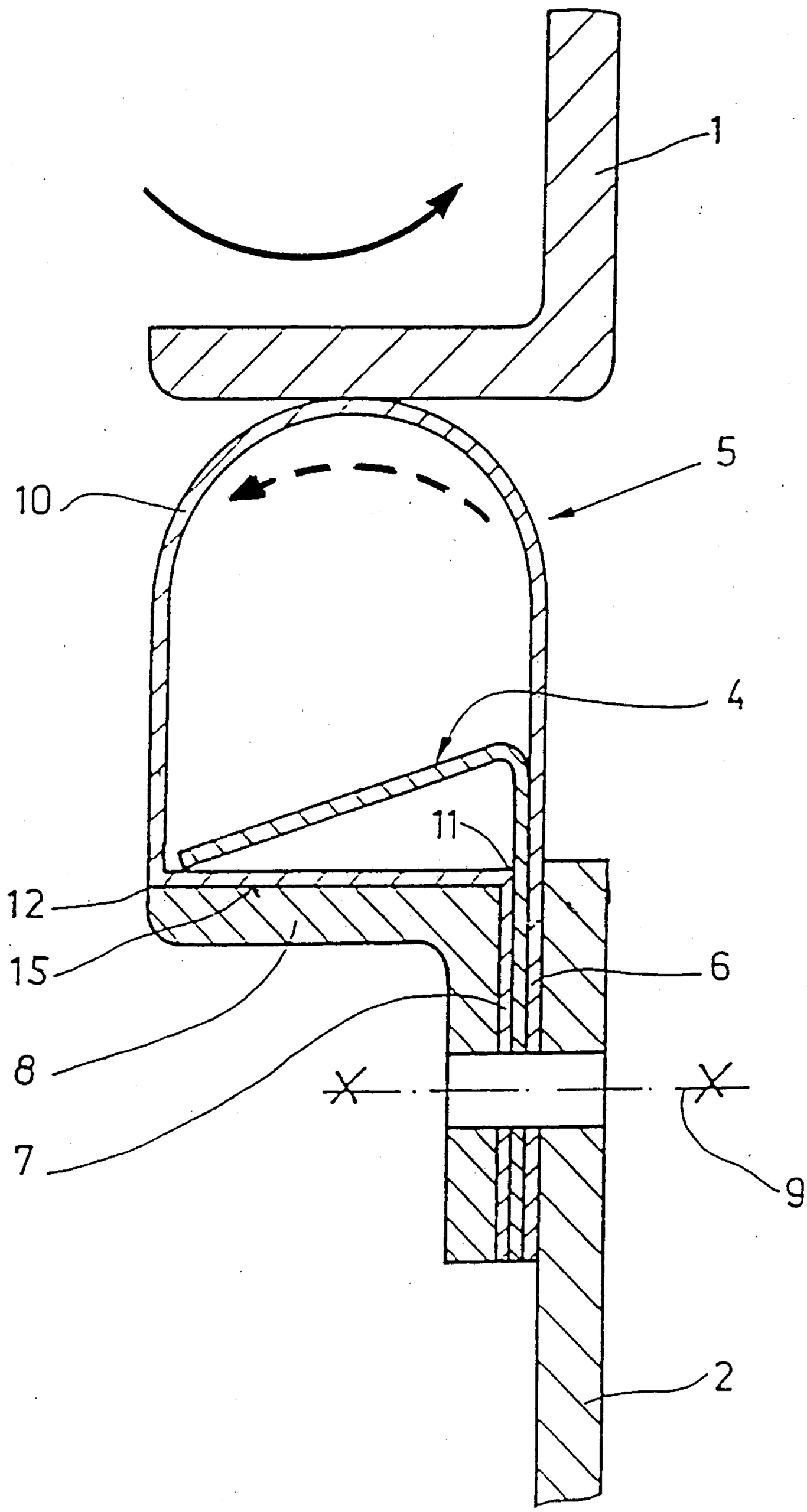

Fig. 4

Patent Agents
Fetherstonhaugh & Co.

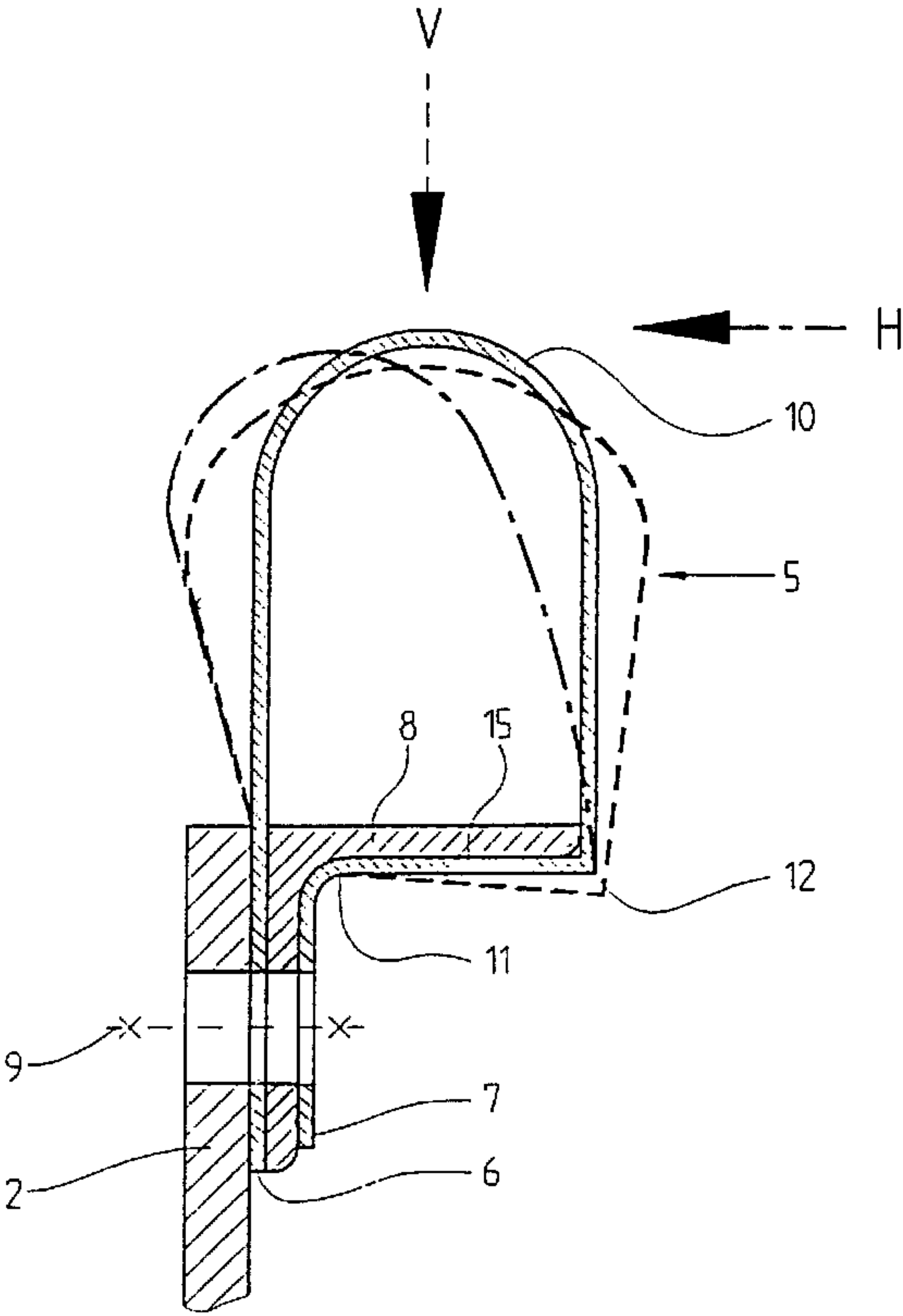
V
H
10
5
8
15
12
11
9
7
2
6