Nov. 12, 1957 M. D. SKINNER 2,812,521

SINK CONSTRUCTION

Filed Feb. 7, 1955 2 Sheets-Sheet 1

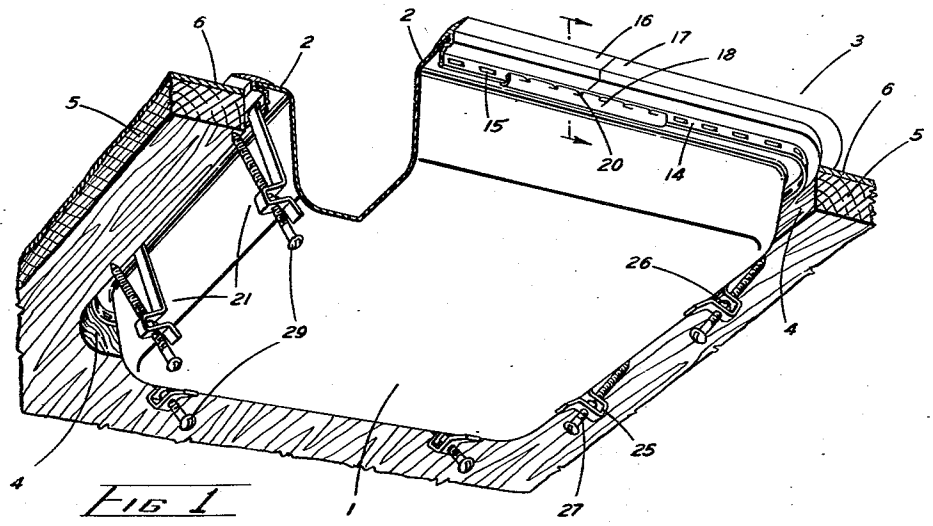

FIG 1

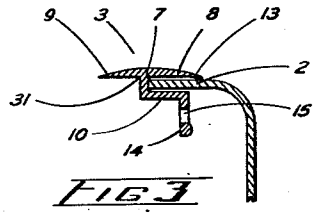

FIG 3

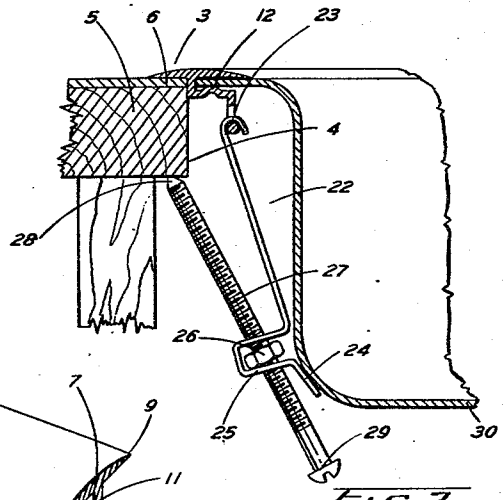

FIG 2

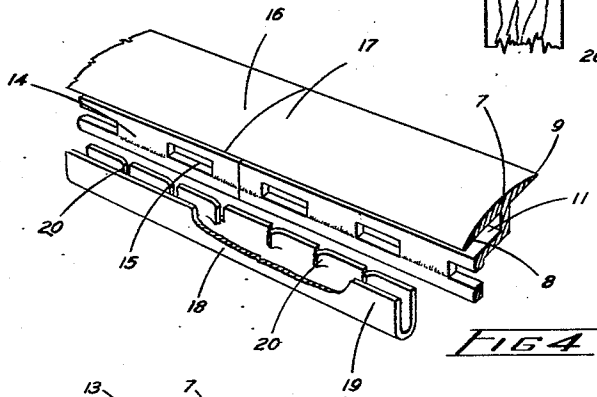

FIG 4

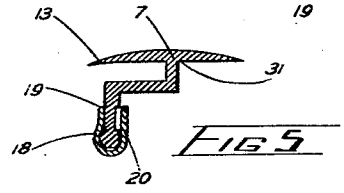

FIG 5

INVENTOR
MILTON D. SKINNER
BY Douglas S. Johnson
ATTY.

Nov. 12, 1957 M. D. SKINNER 2,812,521

SINK CONSTRUCTION

Filed Feb. 7, 1955 2 Sheets-Sheet 2

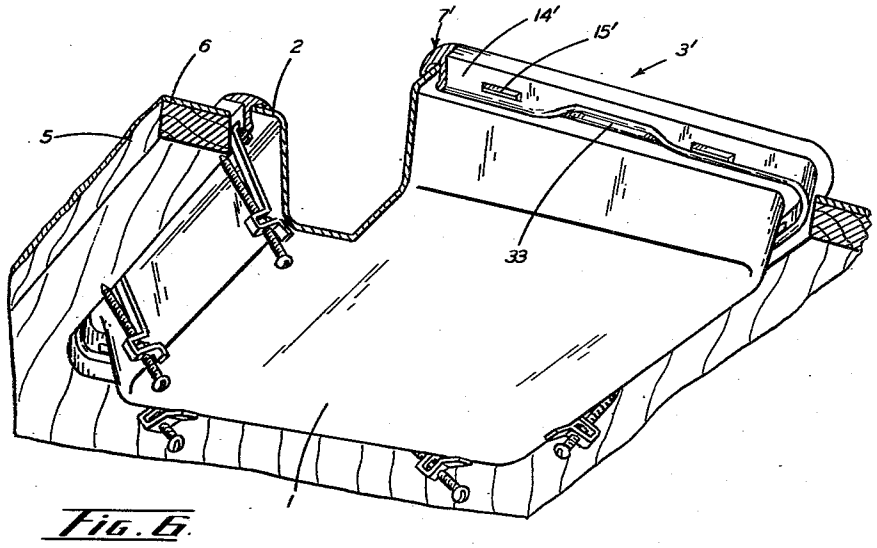

Fig. 6.

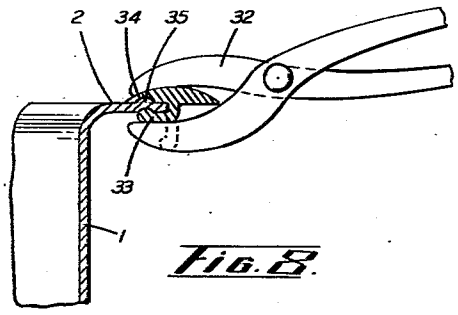

Fig. 8.

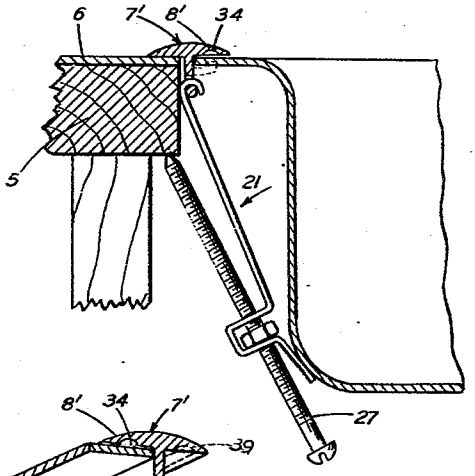

Fig. 7.

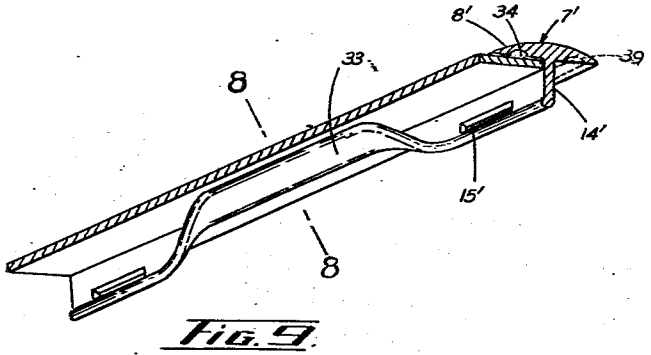

Fig. 9.

INVENTOR

MILTON D. SKINNER

By Douglas S. Johnson

ATTY.

United States Patent Office

2,812,521

Patented Nov. 12, 1957

2,812,521

SINK CONSTRUCTION

Milton D. Skinner, Port Credit, Ontario, Canada

Application February 7, 1955, Serial No. 486,549

11 Claims. (Cl. 4—187)

The invention relates to the construction and installation of sinks, basins and similar fixtures in which the sink is set in an opening in a drainboard and is provided with a flange by means of which it is supported from the drainboard.

In the installation of sinks and basins as aforesaid it is important that the sink flange or rim be drawn tightly down against the drainboard or overlay material covering the drainboard not only to securely hold the sink in position but to provide a water-tight joint around the sink. While it is known to be desirable to provide a clamping arrangement in an effort to secure a water-tight joint usually the space beneath the sink is extremely cramped and the clamping devices employed are often inaccessible and effective clamping cannot be achieved.

It is therefore one of the important objects of the present invention to provide a clamping arrangement requiring a minimum of space and wherein the clamp operators will be conveniently disposed at the underside of the sink for ready access, enabling the tightening down of the sink rim to be easily and conveniently effected thus both ensuring a water-tight joint around the sink and greatly decreasing the time and effort required for installation.

Another important object is to provide a sink construction and clamping arrangement which will not require any welding or other operation which would mar or damage the sink finish and appearance.

As particularly described in my copending United States application Serial Number 319,579, filed Nov. 8, 1952, now abandoned, it is highly desirable to apply a trim strip to overlie and conceal the raw edge of the sink flange, and it is a further object of the invention to provide a simplified and improved trim strip arrangement and method of trim strip application to facilitate both the assembly of the sink and strip into an integral unit and to facilitate the sink unit installation.

In accordance with the present invention the sink basin or the like has rolled on or secured to the flange thereof, prior to its installation, a trim strip formed to present groove-like formations to receive the sink flange and with depending leg portions, and a series of clamping devices are, preferably, floatingly suspended from the leg portion and carry adjustable clamping members to cooperate with the underside of the drainboard counter top or the like to draw the sink rim down against the upper side thereof.

More particularly it is an important feature to form the depending trim strip leg with a series of slots and to form the clamping devices as elongated hangers hooked in the slots and depending to adjacent the bottom of the sink, the hangers carrying elongated clamping screws readily accessible from beneath the sink to engage the underside of the drainboard.

In one manner of employing the invention the trim strip is secured on the sink flange by first rolling the strip with the flange received in the strip groove formations around the flange until the strip ends abut, then the strip

is secured in position on the flange by a novel self locking channel member bridging the joint and engaging the strip leg. More specifically the channel member is formed with a series of spring projections or tangs on one wall thereof which resiliently bite into the strip leg to prevent separation of the abutting strip ends as well as to hold the strip ends in alignment.

Again it is a feature to provide a second rolling operation following application of the trim strip in order to compress the strip groove and anchor the sink flange in the groove.

In another manner of employing the invention where it is advantageous to await the arrival of the sink at the site of the installation before applying the trim strip, the strip is supplied as a preformed closed ring or frame of T cross-section to be dropped over the sink flange with the inner section of the head of the T overlying the flange and the leg of the T projecting below the flange, the leg being subsequently deformed so that the flange is gripped between the overlying head section and the deformed leg at intervals around the sink.

These and other objects and features will become apparent from the following description taken in conjunction with the accompanying drawings, in which:

Figure 1 is an underside perspective view partly broken away of a sink installation embodying the present invention.

Figure 2 is an enlarged fragmentary vertical sectional view through the sink and trim strip and illustrating the operation of the clamping device.

Figure 3 is a fragmentary vertical sectional view showing the first step in assembling the trim strip on the sink flange.

Figure 4 is a perspective sectional view showing the opposite ends of the trim strip brought into abutment and showing the locking channel member partly broken away ready for application.

Figure 5 is a vertical sectional detail showing the locking channel in position locking the strip ends in abutment.

Figure 6 is an underside perspective view partly broken away similar to Figure 1 but showing a modified strip arrangement where the strip has been secured to the sink flange at the site of installation.

Figure 7 is an enlarged fragmentary vertical sectional view through the sink and trim strip of Figure 6.

Figure 8 is a fragmentary vertical sectional view taken on the line 8—8 of Figure 9, showing the manner of assembling the trim strip of Figure 6 on the sink flange.

Figure 9 is a perspective sectional view illustrating the interlock between the sink flange and trim strip after the deforming operation of Figure 8.

With reference first to Figures 1 and 2, the sink 1 is shown with a flat flange 2 extending around its upper edge. Secured to the flange 2 is a trim strip generally designated at 3, which supports the sink in an aperture 4 formed in a drainboard 5 normally covered with an overlay material 6. The trim strip 3 is formed with a T-shaped head 7, the inward portion 8 of which overlies the sink flange 2 and the outward portion 9 of the T head overlies the drainboard 5.

Extending laterally from the lower end of the T 7 is a body portion 10 underlying the head portion 8 and forming therewith a grooved or U formation 11, into which the sink flange 2 is received. Preferably the body portion 10 is deformed at 12 to securely pinch the sink flange 2 within the U formation 11. Additionally, the inner edge 13 of the inwardly extending head portion 8 is turned down slightly and feathered to a fine edge so that on pinching of the flange 2 between the body portion 10 and head portion 8 this fine edge 13 will deform suffi-

ciently against the upper surface of the sink flange to effect a continuous joint around the sink.

The body portion 10 of the strip terminates in a downwardly turned leg portion 14 formed with a series of slots 15 therein which extend around the perimeter of the sink. The strip 3 is formed around the sink until the opposing ends 16 and 17 are brought substantially into abutment as illustrated in Figure 4 with the leg portions 14 of the strip ends in alignment.

To secure the strip in the closed loop formation formed by bringing the ends 16 and 17 into abutment, a channel shaped locking device 18 is employed. This device 18 is formed with the upper edge 19 of one wall thereof turned outwardly to increase the strength and rigidity of the channel which is preferably formed of a resilient metal while the opposite wall is slotted and formed to present inturned rigid tangs or barbs 20 with the barbs at one end of the channel being disposed oppositely to the other. When the channel 18 is forced on the aligned leg portions 14 of the strip ends 16 and 17, the tangs 20 bite into the metal of the leg portions 14 as shown in Figure 5 to securely hold the channel on the legs and thus maintain the strip ends 16 and 17 in alignment and additionally in biting into the legs they prevent separation of the strip ends 16 and hence prevent opening out of the closed loop formed by the trim strip 3.

At spaced intervals around the sink are provided clamping devices generally designated at 21 each of which comprises an elongated hanger or anchor bracket 22 comprising an elongated strip having its upper end formed into a hook 23 and being formed adjacent its lower end 24 into a U 25 within which is received a nut 26. An elongated clamping screw 27 is threaded through the nut 26 and through suitable registering apertures in the U 25 and has an upper end 28, preferably pointed, engaging the underside of the drainboard 5. The lower end 29 which is slotted to receive a screwdriver or like tool, is disposed adjacent to, and preferably below, the sink bottom 30.

With the hooked upper end 23 engaged selectively in one of the slots 15 in the leg portion 14 of the trim strip, the hanger or anchor bracket 22 is swingably or "floatingly" supported from the trim strip and can be swung to the position of Figure 2 to allow the clamping screw 27 to engage the underside of the drainboard 5 immediately adjacent the drainboard aperture or opening 4. In this position, as illustrated in Figure 2, the lower end 24 of the anchor bracket 22 forms a broad convenient bearing surface to engage the sink 1 adjacent to the bottom 30. With such an arrangement, as illustrated in Figure 2 particularly, the installing fixtures comprising the trim strip 3 and clamping devices 21 will enable the sink to be secured in position even though the space beneath the sink and beneath the drainboard is very cramped or highly inaccessible.

Because the clamping devices 21 can be selectively engaged in any one of the slots 15 in the leg portion of the trim strip 3, these clamping devices can be advantageously employed to apply pressure downwardly on the sink flange and trim strip at the requisite points to ensure a proper joint around the sink flange.

It is also important to note that the trim strip 3 is secured on the sink flange 2 by its application around the sink flange and its mechanical interlock therewith, requiring no welding or other operation. Similarly, it is important to note that when applied this trim strip 3 forms the sole means of support for the sink from the drainboard 5 and it further forms the means of supporting the clamping devices 21 which are not attached by welding or in any other manner to the sink, eliminating the cost of such an operation and the almost invariable marring or marking of the sink, for instance, where the sink is enamelled.

By the provision of the trim strip 3 an accurate shoulder 31 formed between the underside of the outward head portion 9 and the depending leg portion of the T-shaped head 7 provides a means of precisely determining the size of aperture or opening 4 in the drainboard. Further, since the trim strip 3 can be accurately extruded and the feathered edge 13 of the inwardly extending head portion 8 will conform to variations in the sink flange, an accurate seal, both between the trim strip 3 and the drainboard 5 or its overlay 6, and between the trim strip 3 and the sink flange 2 can be effected.

In assembling the trim strip 3 on the sink flange 2 according to the embodiment of the invention illustrated in Figures 1 to 5, the strip is preferably rolled around the flange 2 with the flange being received in the U formation 11 until the strip ends 16 and 17 are at least substantially in abutment and in alignment. The channel locking member 18 is then applied and subsequently the body portion 10 of the trim strip is deformed by means of suitable pressure rolls applied around the sink to provide the pinching effect above described and to deform the inner head edge 13 against the sink flange.

The sink with trim strip thus an integral part thereof, is ready for assembly, and upon attaching the clamping devices at the required points, can be dropped through the drainboard aperture 4 and tightened down by operating the clamping screws 27.

If it is desired it will be understood that a suitable cement or plastic, or a rubber tape can be located under the portion 8 of the trim strip head to increase the bond and seal between the trim strip and sink flange.

Where it may not be desirable to attach the trim strip to the sink flange at the place of manufacture, for instance where the sinks or basins are heavy and the trim strips may become damaged in shipping, the trim strip may be provided as a separate preformed ring as illustrated in Figures 6 to 9 and attached to the sink flange at the site of installation.

Under these circumstances the trim strip 3' is supplied as a preformed ring of generally T-shaped cross-section having a head 7' and a leg portion 14' provided with slots 15'. The trim ring 3' is preferably maintained in its closed form by a channel locking member corresponding to the channel member 18 although other suitable means may be employed if desired.

To employ the trim ring 3' it may first be used to inscribe the size of the aperture in the drainboard 5 and overlay 6 and it is then dropped over the flange 2 of the sink 1 with the head portion 8' overlying the sink flange. Then as illustrated in Figure 8 the leg portion 14' is deformed at suitable intervals around the perimeter of the sink by means of a pair of pliers 32 or other suitable tool so that these deformed leg portions 33 underlie the head portion 8' and are closed on this head portion to grip the sink flange 2.

In this embodiment of the invention the underside of the head portion 8' may be formed with a groove 34 and the sink flange may be formed with ridge means as at 35, Figure 8, to increase the interlock between the flange and strip. Further, the head portion 9' of the strip may have grooves or pockets formed in the underside thereof as indicated in dotted lines at 36, Figure 9, to receive and store cement, glue or the like to increase the bond with the overlay.

On deforming of the leg portions 14' the strip 3' is made integral with the sink flange 2 and the strip 3' is employed as is the strip 3, as the sole supporting means for the sink. The clamping devices 21 are again employed, hooking into the slots 15', as the means of drawing the sink flange, that is the integrally secured trim strip 3', down against the overlay material 6.

To facilitate the deformation of the leg portions 33, it may be desirable to cut or suitably weaken the leg portion 14' of the strip at the desired intervals.

It will also be understood that while I have shown the preferred embodiments of my invention, various modifi-

cations in detail and structural variations may be made without departing from the scope of the appended claims.

What I claim as my invention is:

1. In a sink and drainboard assembly wherein a flat flange type sink is mounted in an aperture in a drainboard, a trim strip formed with a U-shaped section snugly receiving the sink flange, and forming the means of supporting said sink from said drainboard, said strip having a depending leg portion floatably supporting a plurality of depending anchor brackets, and each of said anchor brackets carrying an elongated screw member having an upper end adapted to engage the underside of the drainboard and a lower end disposed adjacent the bottom of said sink.

2. In an installation as claimed in claim 1 in which said depending trim strip leg is formed with a plurality of slots therein, and each of said anchor brackets is formed with a hooked upper end selectively hooked in one of said slots.

3. In a sink and drainboard assembly as claimed in claim 2, in which each of said anchor brackets comprises an elongated strip having a hooked upper end adapted to be selectively hooked into one of said slots, and being bent intermediately of its length into a laterally offset U formation, the spaced side of the U having registering apertures therethrough, a nut member retained within said U and having its aperture registering with the aforesaid apertures, and its clamping screw comprises an elongated screw threaded through said nut and extending through the apertures in said spaced U sides.

4. In a sink and drainboard assembly as claimed in claim 1 in which said hanger comprises an elongated depending strip loosely secured at its upper end to said trim strip leg portion and having a bearing portion at its lower end to engage said sink adjacent the bottom thereof.

5. In a sink and drainboard assembly as claimed in claim 4 in which said depending hanger strip is bent intermediate its ends into a laterally offset U formation, the spaced sides of the U having registering apertures therein through which said screw operator extends and a nut member threadably received on said screw operator retained within said U.

6. The combination with a sink having an outwardly turned flange at the upper edge thereof of a trim strip applied around said sink flange and formed with a U formation to snugly receive said sink flange therewithin, and having a depending leg formation and a plurality of clamping devices each comprising an elongated anchor bracket, said strip leg and bracket being formed to interengage to swingably suspend said bracket from said strip leg, and an elongated clamping screw carried by said bracket.

7. A ring-like trim strip for application around the flange of a sink having an outwardly turned flange, comprising a T-shaped head portion having at one side of a central depending leg portion an inwardly disposed head portion adapted to overlie the sink flange, and at the other side of said leg portion an outwardly disposed head portion adapted to overlie the drainboard, said ring-like trim strip having its ends disposed substantially in butt jointed relation, and a channel locking device engaging said depending leg formation and bridging the joint between said strip ends to lock said strip in closed loop position.

8. A device as claimed in claim 7 in which said channel locking member is formed with a plurality of tangs projecting within the channel and adapted to bite into the leg portions of said strip ends on opposite sides of said joint to lock said strip ends against separation.

9. A device as claimed in claim 8 in which said tangs on opposite sides of said joint are oppositely disposed to resist movement of said strip ends in opposite directions.

10. A trim strip for application around the flange of a sink having an outwardly turned flange comprising a T-shaped head portion having at one side of a central depending leg portion an inwardly disposed head portion adapted to overlie the sink flange and at the other side of said leg portion an outwardly disposed head portion adapted to overlie a drainboard, said leg portion having an inwardly off-set body portion underlying said inwardly disposed head portion and forming therewith a groove adapted to extend around and receive the sink flange, said body portion being deformable towards said inwardly disposed head portion to grip a flange of a sink introduced into said groove, and said inwardly off-set body portion having depending from its inner edge a leg portion provided with a plurality of slots therein forming the means for interlocking with a clamping device.

11. In a sink and drainboard assembly wherein a flat flange type sink is mounted in an aperture in a drainboard, a trim strip formed with a plurality of spaced U-shaped sections for snugly receiving a sink flange and forming the means of supporting said sink from the drainboard, said strip having depending leg portions between said U-shaped sections floatably supporting a plurality of depending anchor brackets and each of said anchor brackets carrying an elongated screw member having an upper end adapted to engage the underside of the drainboard and the lower end disposed adjacent the bottom of a sink.

References Cited in the file of this patent

UNITED STATES PATENTS

2,502,553	Ball	Apr. 4, 1950
2,503,910	Kerby	Apr. 11, 1950
2,549,370	Bonnell	Apr. 17, 1951
2,704,370	Drain	Mar. 22, 1955
2,717,397	Ross	Sept. 13, 1955