July 8, 1924. 1,500,687

H. B. TAYLOR

POWER TRANSMITTING MECHANISM

Filed Dec. 29, 1921

Fig. 1.

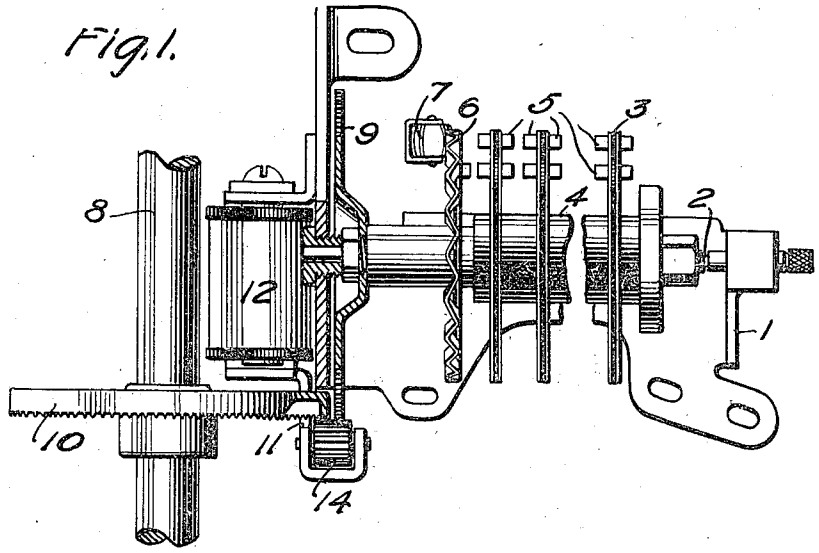

Fig. 2.

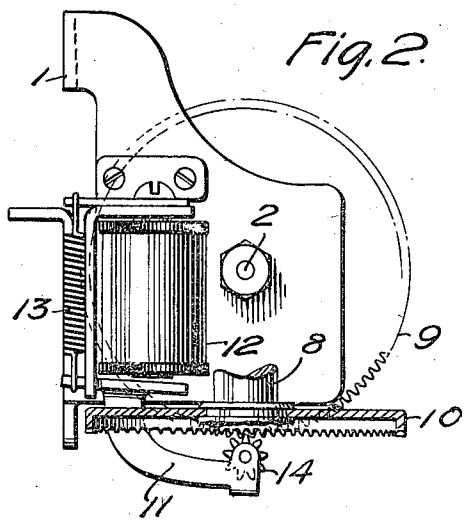

Inventor:
Herbert B. Taylor;
by W. E. Beatty, Atty

Patented July 8, 1924. 1,500,687

UNITED STATES PATENT OFFICE.

HERBERT B. TAYLOR, OF WESTFIELD, NEW JERSEY, ASSIGNOR TO WESTERN ELECTRIC COMPANY, INCORPORATED, OF NEW YORK, N. Y., A CORPORATION OF NEW YORK.

POWER-TRANSMITTING MECHANISM.

Application filed December 29, 1921. Serial No. 525,588.

To all whom it may concern:

Be it known that I, HERBERT B. TAYLOR, a citizen of the United States, residing at Westfield, in the county of Union, State of New Jersey, have invented certain new and useful Improvements in Power-Transmitting Mechanisms, of which the following is a full, clear, concise, and exact description.

This invention relates to power transmitting mechanisms and is directed particularly to a gear drive, adapted for use in connection with sequence switches in automatic telephone systems.

The object of the invention is the provision of an intermittent angular drive which is positive in operation, simple in construction and economical to manufacture.

Heretofore, sequence switches of the above character have been provided with friction drives, which although operating satisfactorily on moderate loads, have been found not entirely satisfactory for use on extraordinarily large switches on account of excessive slippage.

The feature of the invention consists in the combination in an intermittent drive of a driving gear, a driven gear and an idler pinion which may be intermittently brought into joint engagement with the aforementioned gears. The idler pinion is preferably mounted on the armature of an electromagnet and is normally engaged with only one of the aforementioned gears though it may, if desired, be normally disengaged from both of said gears. When the electromagnet associated with the aforementioned armature is energized and the armature thereby attracted, the idler pinion is drawn into engagement with the teeth of both gears jointly, and the driven gear is accordingly rotated through the medium of the idler pinion.

In the accompanying drawing, Fig. 1 is a side elevation showing a portion of a sequence switch provided with a positive drive in accordance with this invention; and Fig. 2 is an end elevation thereof.

The sequence switch is similar to that shown in U. S. Patent No. 1,127,808, issued to J. N. Reynolds and C. F. Baldwin, February 9, 1915, and comprises a frame 1 in which is journaled a shaft 2 which carries any desired number of cams 3 and insulating separators 4, whereby the cams are held in spaced relation. The cams 3, as described in detail in the above mentioned Patent 1,127,808, each comprise a pair of skeletonized metal discs and a separating disc of insulating material. Two pairs of brushes 5 are provided for each cam, and these are insulated and mounted on the frame 1. The corrugated centering cam 6 is also secured to the shaft 2 and is engaged by a spring pressed roller 7 whereby the sequence switch is stopped in any one of several definite angular positions.

The sequence switch is mounted on a suitable rack (not shown) and a continuously rotating vertical shaft 8 is also journaled in suitable bearings which are mounted on the rack. A spur gear 9 is rigidly secured to the shaft 2 for driving the sequence switch, and is referred to as the driven gear. A driving gear, preferably in the form of a crown gear 10, is rigidly secured to the driving shaft 8 and continuously rotates therewith. It will be noted from Fig. 1 that gears 9 and 10 are in close juxtaposition, but they do not engage one with the other.

An electromagnet 12 is mounted upon the frame 1, the armature of which is provided with a lever arm 11, preferably integral therewith. The armature is held in its normal position by the tension spring 13. An idler pinion 14 is journaled at the end portion of lever arm 11.

With electromagnet 12 deenergized, pinion 14 is disengaged from one or both of the gears 9 and 10, as may be desired, but it is found preferable to have the pinion 14 normally in partial engagement with one or the other of these gears so that the possibility of noisy and grinding engagement upon the operation of pinion 14 is reduced to a minimum.

Upon each energization of electromagnet 12, its armature is attracted and the pinion 14 is drawn into joint engagement with gears 9 and 10, and the shaft 2, together with the cams 3 and 6 are rotated until the circuit of magnet 12 is opened, whereupon the idler pinion is restored to its normal position wherein it is disengaged from at least one of the gears. The sequence switch is thereupon brought to rest immediately by the spring pressed roller 7 engaging one of the recesses in the corrugated cam 6.

While the driving shaft 8 has been herein disclosed as disposed at right angles to the driven shaft 2, it will be obvious that by changing the crown of gear 10 or by replacing it with a spur gear the shafts may be disposed at any desired angle with relation to each other or disposed in alignment.

What is claimed is:

1. In combination, a pair of rotatable shafts having their axes angularly disposed, a crown gear carried by one of said shafts and rotatable therewith, a spur gear carried by the other of said shafts and rotatable therewith, a pinion jointly engageable with said crown gear and said spur gear, said pinion being normally engaged with but one of said gear members, and an electromagnet for moving said pinion into engagement with the other of said gear members.

2. In combination, a pair of angularly disposed shafts, a gear arranged on each of said shafts, each having its engageable toothed portion in juxtaposition with reference to the other, another gear having its axis of rotation movable in a plane common to the axes of the first mentioned gears and normally engaged with but one of them, a magnet armature for the journal of the last mentioned gear, and a magnet associated with said armature which when energized is effective to move said armature to bring said gears into mesh.

3. In combination, a driving shaft, a train of gears intermittently actuated thereby, said train including angularly disposed gears, each of said gears having its toothed portion in line parallel and lying in juxtaposition to each other, a supporting plate; an electromagnet secured thereto and an armature responsive to the energization of said magnet for moving one of said gears in engagement with another of said gears for starting said gear train in motion, and a retracting spring for disengaging said gears when said electromagnet deenergizes.

In witness whereof, I hereunto subscribe my name this 27th day of December, A. D. 1921.

HERBERT B. TAYLOR.