Office de la Propriété Intellectuelle du Canada
Un organisme d'Industrie Canada

Canadian Intellectual Property Office
An agency of Industry Canada

CA 2085219 C 2004/10/19

(11)(21) 2 085 219

(12) BREVET CANADIEN
CANADIAN PATENT

(13) C

(86) Date de dépôt PCT/PCT Filing Date: 1991/06/18
(87) Date publication PCT/PCT Publication Date: 1992/01/09
(45) Date de délivrance/Issue Date: 2004/10/19
(85) Entrée phase nationale/National Entry: 1992/12/11
(86) N° demande PCT/PCT Application No.: US 1991/004139
(87) N° publication PCT/PCT Publication No.: 1992/000251
(30) Priorité/Priority: 1990/06/25 (543,262) US

(51) Cl.Int.^{5}/Int.Cl.^{5} C04B 18/06, C04B 7/02

(72) Inventeur/Inventor:
MEHTA, POVINDAR K., US

(73) Propriétaire/Owner:
THE REGENTS OF THE UNIVERSITY OF CALIFORNIA, US

(74) Agent: OYEN WIGGS GREEN & MUTALA

(54) Titre : PRODUITS DE CIMENT HAUTEMENT DURABLES ET CONTENANT DES CENDRES SILICIEUSES
(54) Title: HIGHLY DURABLE CEMENT PRODUCTS CONTAINING SILICEOUS ASHES

(57) Abrégé/Abstract:
Cement blends incorporating at least 5 and up to 40% siliceous crop residue ash and cement compositions and products containing said blends are provided. At least about 50% of the ash particles are in the 10-75 micrometer size distribution range and the mean diameter is greater than 6 micrometer. Methods for decreasing the permeability of hardened cement products and a method for accelerating the early strength of a concrete mixture containing fly ash are also provided.

2085219

PCT

WORLD INTELLECTUAL PROPERTY ORGANIZATION
International Bureau

INTERNATIONAL APPLICATION PUBLISHED UNDER THE PATENT COOPERATION TREATY (PCT)

(51) International Patent Classification 5 : C04B 07/02

A1

(11) International Publication Number: WO 92/00251

(43) International Publication Date: 9 January 1992 (09.01.92)

(21) International Application Number: PCT/US91/04139

(22) International Filing Date: 18 June 1991 (18.06.91)

(30) Priority data:
543,262 25 June 1990 (25.06.90) US

(71) Applicant: THE REGENTS OF THE UNIVERSITY OF CALIFORNIA [US/US]; 300 Lakeside Drive, Oakland, CA 94612 (US).

(72) Inventor: MEHTA, Provindar, K.; 7419 Park Vista, El Cerrito, CA 94530 (US).

(74) Agents: SMITH, Karen, S. et al.; Flehr, Hohbach, Test, Albritton & Herbert, Four Embarcadero Center, Suite 3400, San Francisco, CA 94111-4187 (US).

(81) Designated States: AT (European patent), AU, BB, BE (European patent), BF (OAPI patent), BG, BJ (OAPI patent), BR, CA, CF (OAPI patent), CG (OAPI patent), CH (European patent), CI (OAPI patent), CM (OAPI patent), DE (European patent), DK (European patent), ES (European patent), FI, FR (European patent), GA (OAPI patent), GB (European patent), GN (OAPI patent), GR (European patent), HU, IT (European patent), JP, KP, KR, LK, LU (European patent), MC, MG, ML (OAPI patent), MR (OAPI patent), MW, NL (European patent), NO, RO, SD, SE (European patent), SN (OAPI patent), SU, TD (OAPI patent), TG (OAPI patent).

Published
With international search report.

(54) Title: HIGHLY DURABLE CEMENT PRODUCTS CONTAINING SILICEOUS ASHES

(57) Abstract

Cement blends incorporating at least 5 and up to 40 % siliceous crop residue ash and cement compositions and products containing said blends are provided. At least about 50 % of the ash particles are in the 10-75 micrometer size distribution range and the mean diameter is greater than 6 micrometers. Methods for decreasing the permeability of hardened cement products and a method for accelerating the early strength of a concrete mixture containing fly ash are also provided.

HIGHLY DURABLE CEMENT PRODUCTS CONTAINING SILICEOUS ASHES

BACKGROUND OF THE INVENTION

The present invention relates to a novel anhydrous blend of portland cement and siliceous ash, to novel cement compositions, to a method for reducing the permeability of hardened cement products and to a method for accelerating the early strength of concrete mixtures. A certain type of ash can be made from the controlled incineration of certain siliceous crop residues, such as rice hull and rice straw. This ash consists of cellular particles with silica held essentially in the non-crystalline (amorphous) state and is known to be used as a pozzolanic material in the preparation of blended hydraulic cements (See, U.S. Patent 4,105,459, August 8, 1978, to Povindar K. Mehta. An hydraulic cement is a dry powder which, upon mixing with water, sets and becomes a hardened solid mass forming a water resistant product.

Since the crystalline forms of silica, such as cristobalite, tridymite, and quartz, are known to cause lung cancer and other serious respiratory diseases, the federal and state agencies for environmental protection are quite concerned that the disposal of rice hull and rice straw by burning should not result in ash which

contains a significant amount of crystalline silica. Consequently, industrial furnaces of various designs are being used in cogeneration plants, which not only produce rice hull ash (RHA) by burning rice hulls efficiently (that is the unburnt carbon in the ash is usually held to less than 10% by weight) but also produce a material containing essentially amorphous or noncrystalline silica. Hydraulic cements blended with siliceous RHA containing 20 to 30% by weight of portland cement and 70-80% by weight of the ash are disclosed in U.S. Patent 4,105,459. The majority of ash particles in these blends are probably larger than 75 micrometers(μm).

Concrete and mortar compositions made from ultra-fine (i.e. particles with a median diameter of 1 to 3 micrometers) RHA slurries of approximately 7.5% to 15% RHA by weight of the combined weight of the ash and portland cement have been disclosed. (See, U.S. Patent No. 4,829,107 to L.J. Kindt). These compositions were found to have a marked decrease in chloride permeability upon hardening. However, the Kindt patent also disclosed that compositions containing RHA having a particle median diameter of greater than 4 micrometers did not exhibit low permeability and had a chloride permeability equivalent to mortars and concretes that contained no RHA. Even though only admixtures (i.e. slurries) are discussed and claimed in the Kindt patent, the Kindt patent states that RHA having a median particle diameter of 4 micrometers or less can be used in dry powder form. However, due to the high surface charges developed by ultra-fine grinding, the powder of the Kindt patent tends to flocculate and attempts to add such RHA in dry form to a concrete mixture using the standard mixing procedure (ASTM C 192) gave a non-uniform dispersion.

BRIEF SUMMARY

One aspect of this invention is to provide a novel blend of crop residue siliceous ash and cement. Another aspect of this invention is to provide a novel blend of crop residue siliceous ash, fly ash and cement.

A further aspect of this invention is to provide novel hydraulic cement compositions.

Another aspect of this invention is to provide hydraulic cement compositions prepared from crop residue siliceous ash whereby the cement composition has high strength and low permeability or very low permeability to water and chloride ions.

Still a further aspect of this invention is to provide a method for decreasing the water and chloride ion permeability of cement products.

Yet another aspect of this invention is to provide a method for accelerating the early strength of concrete mixtures containing fly ash.

BRIEF DESCRIPTION OF THE DRAWINGS

Figure 1 illustrates data in table and graphical form obtained from the particle size distribution analysis of a sample of ground RHA.

Figure 2 shows data in table and graphical form obtained from the particle size distribution analysis of a sample of ultra-finely ground RHA.

Figure 3 is a schematic diagram illustrating the standard apparatus used in the chloride permeability test.

Figure 4 shows data in graphical form obtained from the particle size distribution analysis of ordinary portland cement (ASTM C 150, Type I Portland Cement).

DETAILED DESCRIPTION OF THE INVENTION

This invention describes the use of a siliceous ash, obtained from the burning of crop residues such as rice hull (also called rice husk), which is used as a mineral addition for making cement products.

According to RILEM Committee 73-SBC Report (Jour. of Structures and Materials, January 1988, p.89), the term "mineral addition" is used for inorganic materials, both natural materials and industrial byproducts, that are used in quantities of 5% or more by mass of the cement. Mineral additions may be blended or interground with portland cement, or added directly to concrete before or during mixing.

The upper limit of the mineral addition in cement compositions of this invention is defined by the ASTM Standard Specification C 595 for Type I(PM) and Type IP blended hydraulic cements. Type I(PM) is a pozzolan-modified portland cement produced either by intergrinding portland cement clinker and pozzolan, or by blending portland cement and finely divided pozzolan, in which the pozzolan content is less than 15% by weight of the pozzolan-modified portland cement. A pozzolan is an inorganic material which consists principally of chemically reactive siliceous or siliceous and aluminous compounds and which, in the presence of moisture, is capable of reacting with lime (calcium hydroxide, $Ca(OH)_2$), to form a hardened mass of calcium silicate hydrates and calcium aluminate hydrates. Type IP is a portland-pozzolan cement produced either by intergrinding portland cement clinker and pozzolan or by blending portland cement and finely divided pozzolan,

in which the pozzolan constituent is between 15 and 40 weight % of the portland-pozzolan cement.

CONCRETE PERMEABILITY REDUCTION

The siliceous rice hull ashes used herein are generally of the "highly pozzolanic type", as described in the RILEM 73-SBC Report. According to this report, the controlled incineration of rice hulls produces a cellular product of high surface area and silica mostly in the amorphous state, two factors which are responsible for the high pozzolanicity. However, a rice hull ash which is relatively less amorphous, such as RHA No. 3 (See, Table 1), may also be used in this invention.

Random samples of RHA were obtained from rice-hull-burning furnaces of different designs, which are located in three different States of the U.S. (See, Table 1). Two of the ashes, namely RHA No. 1 and RHA No. 2, contained 4.9 and 5.5% carbon respectively. RHA No. 3 was found to contain 35% carbon. By X-ray diffraction analysis it was determined that RHA No. 1 and RHA No. 2 contained 100% and 99% silica in the amorphous state, respectively. By quantitative X-ray diffraction analysis, it was estimated that 90% of the silica present in RHA No. 3 is in the amorphous state, the remaining being in the form of cristobalite.

Table 1. Characteristics of Rice Hull Ash from Three Different Sources

	RHA No. 1 (Louisiana)	RHA No. 2 (Texas)	RHA No. 3 (Arkansas)
Chemical Composition			
SiO_2, %	91.3	93.0	62.5
Al_2O_3	< 0.1	< 0.1	< 0.1
Fe_2O_3	< 0.1	< 0.1	< 0.1
CaO	0.5	0.3	0.2
K_2O	2.1	0.5	1.0
Na_2O	0.5	0.4	0.3
Carbon (by ignition loss)	4.9	5.5	35.0
Mineralogical Composition of Silica			
cristobalite, %	U*	U*	10
tridymite, %	U*	U*	U*
quartz, %	U*	U*	U*
amorphous silica (by difference), %	100	99	90
Particle Size Analysis			
Particles > 75μm^+, %	75	67	90
Surface area by nitrogen adsorption, m^2/g	24.3	53.0	99.2

U* means undetectable by X-ray diffraction analysis.
+ this is the % residue on No. 200 mesh standard sieve for the particles prior to light grinding.

Table 1 also shows the particle size (i.e. effective diameter) analysis of the three ashes. It should be noted that, although the bulk of particles in each ash are larger than 75μm (67 to 90% particles are retained on No. 200 mesh standard sieve), the cellular character of the particles (as illustrated by a typical scanning electron micrograph shown in the U.S. Patent 4,105,459) is evident from the very high B.E.T. surface area values (24.3 to 99.2), as determined by the nitrogen adsorption technique (Monosorb Apparatus, Quantachrome Corp.).

All three ashes shown in Table 1 conformed to the silica described in U.S. Patent 4,105,459, which covers ashes (originating from agricultural matter) containing 49 to 98% silica in highly amorphous form (the balance being mainly residual carbon) and having 10 to 100m^2/g B.E.T. surface area by nitrogen adsorption. Blended portland cements were prepared by mixing 20 to 30% by weight of a Type I portland cement (meeting ASTM C 150 standard specification) and 70 to 80% of any one of the three ashes shown in Table 1, after the ashes had been lightly ground for 15 minutes in a laboratory ball mill. These preparations produced hydraulic cements of satisfactory setting and hardening (strength) properties confirming the disclosures of U.S. Patent 4,105,459..

Blended cements are produced either by intergrinding a suitable additive with portland cement clinker or by mixing portland cement with a finely ground additive. Although fine grinding of the ash prior to making a blended cement is not necessary for the purpose of increasing the surface area and reactivity, a light grinding treatment to pulverize the very large particles (i.e. particles having a median diameter of >75μm) is thought to be helpful in producing a more homogeneous ash-portland cement blend. This, is not necessary for blended cements produced by intergrinding. Unless otherwise indicated, the ashes used in this invention and described below were lightly ground such that there was approximately a 10% residue when tested by wet screening on a No. 200 mesh sieve (i.e., after light grinding about 10% of the particles are still larger than 75μm but 90% are now smaller than 75μm). Typical particle size analysis of the lightly ground sample of RHA No. 1 (also identified as Sample G) is shown in Figure 1. The data in Figure 1 show that 89.3% of the particles are less than 77μm size and only 9.7% of the particles are below 10μm size. This means that 80% of

the particles are in the 10-77μm size range. The particle size analysis shown in Figures 1, 2 and 4 were carried out by the Horiba Apparatus (Model LA-500), using laser-light scattering of a dispersed sample.

The chemical and physical characteristics of a normal portland cement meeting the ASTM C 150 requirements for Type I portland cement, which was used in the experiments described in this invention, are shown in Table 2. A crushed limestone aggregate from the San Francisco bay area (1/2 inch maximum size) was used as the coarse aggregate, and a quartzitic sand with 3.0 fineness modulus was used as the fine aggregate for making the concrete mixtures of this invention. The term hydraulic cement composition as used herein refers to any composition that contains cement, water and a fine or coarse aggregate and will set and become a hardened solid mass. The term cement product refers to any hardened product, other than cement paste, resulting from the hydration of a hydraulic cement and includes hardened concretes and mortars. As used herein, a mortar product is any cement product that is obtained by mixing a cement, a fine aggregate and water, a concrete product is any cement product that is obtained by mixing a cement, a fine aggregate and a coarse aggregate and water.

Table 2. Portland Cement, Chemical and Physical Properties

Chemical Analysis, %		Physical Properties	
SiO_2	22.03	Surface air by Blaine air-permeability method:	3350cm^2/g
Fe_2O_3	3.67	Specific Gravity	3.15
Al_2O_3	4.03	Initial setting time	2h: 19 min
CaO	65.19	Final setting time	4h: 16 min
MgO	0.88	Compressive strength ASTM C109 mortar	
SO_3	2.86	3 days	2623 psi
Ignition Loss	0.98	7 days	3711 psi
Insoluble Residue	0.16	28 days	5936 psi
Na_2O	0.12		
K_2O	0.2		
Total Alkali, as Na_2O	0.25		

Compound Composition	Percentage
C_3S	57.5
C_2S	19.8
C_3A	4.5
C_4AF	11.2

For durability to severe environmental exposure, the American Concrete Institute (ACI Committee 201 on durability) recommends the use of concrete with less than a 0.4 water/cement ratio. Since modern construction practice, such as placement of concrete by pumping and the use of highly reinforced structures, requires high consistency of fresh concrete, a combination of low water/cement ratio and high

consistency (about a 6-10 inch slump) is usually achieved by incorporating a superplasticizing admixture (i.e. a Class F High-range water reducer meeting the ASTM C 494 Standard Specification). A commercially available naphthalene-sulfonate type superplasticizer was used in all concretes described here. The superplasticizer was used in the form of a solution in water, containing 40% solids by weight.

Mix proportions for high-strength superplasticized concrete mixtures were obtained for 8-10 inches slump and 9000-11,000 psi strength range (28-d compressive strength). Laboratory tests showed that a maximum water/cement ratio of 0.34, and a minimum cement content of 630 lb/yd^3 were needed to achieve approximately 9000 psi compressive strength at 28-d (28-days). Similarly, a water/cement ratio of 0.28 and a cement content of 780 lb/yd^3 were needed to achieve approximately 11,000 psi compressive strength at 28-d. Three intermediate mixtures were designed to contain 660, 690, and 720 lb/yd^3 cement content, and 0.327, 0.31, and 0.30 water/cement ratio, respectively. The properties of these five portland cement concrete mixtures were compared with corresponding concrete mixtures made with blended portland cements containing 5%, 10% 15%, 20% and 30% RHA respectively. The same quantity of the superplasticizer (7 1/2 liters per cu. yd concrete) was used in every case, therefore the slump varied from 7 to 10 inches. The mix proportions for each of the five reference concrete mixtures, as well as corresponding mixtures containing blended RHA cements containing 5 to 30% RHA No. 1 (i.e. Tests A-E), are shown in Table 3.

Table 3

Mix Proportions of Concrete

Mix No.	Portland Cement lb/yd^3	RHA lb/yd^3	Coarse Aggregate lb/yd^3	Fine Aggregate lb/yd^3	Super-plasticizer liters/yd^3	Water* lb/yd^3	Water/ Cement Ratio
Test A Reference Concrete	630	0	1820	1325	7.5	215	0.34
5% RHA**	600	30	1820	1325	7.5	215	0.34
Test B Reference Concrete	600	0	1790	1325	7.5	215	0.327
10% RHA**	600	60	1790	1325	7.5	215	0.327
Test C Reference Concrete	690	0	1760	1325	7.5	215	0.31
15% RHA**	600	90	1760	1325	7.5	215	0.31
Test D Reference Concrete	720	0	1730	1325	7.5	215	0.30
20% RHA**	600	120	1730	1325	7.5	215	0.30
Test E Reference Concrete	780	0	1670	1325	7.5	215	0.28
30% RHA**	600	180	1670	1325	7.5	215	0.28

** Concrete with blended cement containing RHA in the amount shown.
* This is mixing water plus the water present in the superplasticizer.

2085219
PCT/US91/04139

ASTM Standard test procedures, such as given by ASTM C 192 and C 39 were used for mixing (except for the concrete mixture with RHA-U as described below in Example 7), casting, curing, and testing the properties of concrete mixtures. Cylindrical, 4 by 8 inches, triplicate specimens were used for determination of compressive strength at 3, 7, and 28 days. The 28-day standard-cured, 4 by 8-inch concrete specimens were also used for testing permeability to chloride ions by the AASHTO T-277 method which, as discussed below, is now a commonly used test for evaluating the general durability of concrete.

It is universally accepted that permeability of concrete to water is the most important property which determines the durability to most of the processes of concrete deterioration, such as cracking due to freezing and thawing cycles, sulfate attack, alkali-aggregate attack, and corrosion of reinforcing steel. The tests for water permeability are very cumbersome and time consuming but a chloride permeability test, in accordance with the AASHTO T-277 methods, is fairly simple and rapid. There is a high correlation between the results obtained in the chloride permeability test and the results obtained in tests for water permeability (i.e. if a product has decreased permeability to chloride it will also have decreased permeability to water). The AASHTO T-277 test, based on the work of D. Whiting of Portland Cement Association (FHWA Report No. RD-81/119, August 1981), involves monitoring of the amount of electrical current passed through a 4-inch diameter x 2-inch thick concrete disk. One end of the test specimen is immersed in a 3% NaCl solution (See, Figure 3) and the other in a 0.3N NaOH solution. It is possible to accelerate the migration of chloride ions across the specimen by application of 60 volts d.c. potential. The total charge that is measured over a 6 hour (6-h) period is

assumed to be related to the chloride permeability of concrete.

In this test, concretes which permit more than 4,000 coulombs are rated as highly permeable; those which permit more than 2,000 coulombs but less than 4,000 are rated as moderately permeable; those which permit more than 1,000 coulombs but less than 2,000 are assumed to have low permeability; and those which permit less than 1,000 coulombs are assumed to have very low permeability (p.127, Report No. FHWA/RD-81/119, August 1981). Note that ordinary portland cement concretes exhibit 9,000-12,000 coulombs chloride permeability in the AASHTO T-277 test. The permeability test used in U.S. Patent No. 4,829,107 was stated to be a modification of the AASHTO T-277 permeability test. Unfortunately the permeability test results disclosed in the 4,829,107 patent to Kindt are given in ohms and since the '107 patent does not fully explain the test methods employed, it is impossible to convert the '107 test results into coulombs and therefore have an accurate comparison of the '107 patent permeability test results with the permeability results obtained in the present invention and described below.

Using the materials and procedures described above, the properties of the concrete mixtures of Tests A-E (See, Table 3) are summarized in Table 4. Note that the compressive strength and the permeability test data are average values of triplicate measurements. The properties of fresh concrete and compressive strength of hardened concrete are as expected. For instance, in the 5 to 30% RHA substitution range in the blended cements, the 3-day and 7-day compressive strengths are not significantly different from the reference concretes, however the 28-day strength tends to be

somewhat higher as a result of the pozzolanic reaction of RHA during the 7 to 28-day period.

During the course of testing for permeability with the AASHTO Method T-277, a very steep drop in the permeability of concretes containing blended cements with more than 5% RHA was observed. The following examples will fully illustrate the present invention.

Table 4

Properties of Concrete Mixtures with Blended Cements Containing RHA No. 1

Property	Test A		Test B		Test C		Test D		Test E	
	Ref. Concrete	Blended Cement Concrete (5%)	Ref. Concrete	Blended Cement Concrete (10%)	Ref. Concrete	Blended Cement Concrete (15%)	Ref. Concrete	Blended Cement Concrete (20%)	Ref. Concrete	Blended Cement Concrete (30%)
Fresh Concrete										
Slump, inches	7.5	9.0	8.0	9.0	9.5	7.0	9.0	8.5	8.5	9.0
air content, %	1.5	1.5	1.0	1.5	1.0	1.5	1.5	1.5	1.5	1.0
unit Weight, lb/ft^3	153	152	154	154	155	154	156	155	155	153
Hardened Concrete										
Compressive strength, ksi										
3-day	5.9	6.0	6.7	6.3	7.1	6.7	7.0	6.8	7.6	6.5
7-day	8.2	8.1	8.4	8.4	8.9	9.0	9.3	9.7	9.7	9.0
28-day	9.6	10.4	9.7	11.5	9.9	11.9	10.5	12.0	11.0	11.2
28 day permeability coulombs passed:	$37x10^2$	$37x10^2$	$37x10^2$	$12.5x10^2$	$32.6x10^2$	$8.7x10^2$	$30x10^2$	$3.9x10^2$	$29.0x10^2$	$3.0x10^2$
rating:	moderate	moderate	moderate	low	moderate	very low	moderate	very low	moderate	very low

Example 1: The results from Test A (see, Table 4) show that the compressive strength and the chloride permeability of the concrete made from the blended cement containing 5% RHA were somewhat affected in comparison to the reference portland cement concrete. However, Test B showed that when compared to the reference portland cement concrete, the 28-day compressive strength of the concrete made with the blended cement containing 10% was increased by approximately 18%, however, the permeability dropped to almost one-third of the reference permeability (from 3,500 to 1,250 coulombs) which improved the concrete permeability rating from moderate to low. (See Table 4).

Example 2: Test C showed that when compared to the reference portland cement concrete, the 28-day compressive strength of the concrete made with the blended cement containing 15% RHA was increased by approximately 20%, however the permeability dropped to almost one-fourth (from 3,260 to 870 coulombs) which improved the permeability rating from moderate to very low. (See Table 4).

Example 3: Test D showed that the 28-day compressive strength of the concrete made with the blended cement containing 20% RHA was increased by approximately 14%, however the permeability dropped to almost one-eighth (from 3,000 to 390 coulombs) which improved the permeability rating from moderate to very low.

Example 4: Test E showed that when compared to the reference portland cement concrete, the 28-day compressive strength of the concrete made with the blended cement containing 30% RHA was increased by approximately 2%, however the permeability dropped by almost an order of magnitude (2,900 to 300 coulombs) (See, Table 4). Another test comparable to Tests A-E

was conducted for a concrete made from a blended cement containing 40% RHA No. 1. The resulting 28 day compressive strength of the concrete was 11.1 ksi and the chloride permeability was 1,165 coulombs.

Example 5: To insure that the marked improvement in the impermeability of concrete resulting from the use of blended cements containing RHA is not limited to the cements containing a unique specimen of RHA (i.e. RHA No. 1), additional tests were conducted with blended cements containing RHA No. 2 and RHA No. 3. For this purpose, it was sufficient to investigate only one of the test mixtures, for instance, the concrete mixture used in Test B of Table 3. Therefore, using the materials and mix proportions of Test B (Table 3), in Test F two additional concrete mixtures were made with blended cements containing 10% of either RHA No. 2 or RHA No. 3. In order to obtain a more homogeneous product, all three ashes were lightly ground to approximately 10% residue on No. 200 mesh standard sieve (75μm). (That is 10% of the particles were larger than 75μm and 90% were smaller.) Properties of concrete made with blended cements containing the three different brands of are compared in Table 5. Table 5 shows that the properties of fresh concrete as well as of hardened concrete including the permeability, were not significantly affected by the substitution of RHA No. 2 or RHA No. 3 for RHA No. 1. Note that compared to the reference concrete mixture (3,500 coulombs), which has a moderate permeability rating according to the recommended specifications for the AASHTO test, all three blended cements containing 10% RHA of the different types of gave a low permeability rating (1,000-2,000 coulombs). Thus, the impermeability-improving benefit in concrete mixtures from the use of blended cements containing low percentages of RHA is not limited to the cements containing RHA No. 1; in fact,

this benefit is available for RHA types with a wide range of physical-chemical characteristics including those represented by lightly ground RHA No. 1, RHA No. 2, and RHA No. 3 (See, Table 1 for the composition of the various RHAs).

Table 5. Comparison of Properties of Concrete with Blended Cements Containing 10% RHA of Different Types

Properties	Test B		Test F	
	Ref.Concrete	Blended cement concrete (RHA No. 1)	Blended cement concrete (RHA No. 2)	Blended cement concrete (RHA No. 3)
Fresh Concrete				
Slump, inches	8.0	9.0	8.0	7.5
air content, %	1.0	1.5	1.0	1.0
unit Weight, lb/yd^3	154	154	154	153
Hardened Concrete				
Compressive strength, ksi				
3-day	6.7	6.3	6.3	5.5
7-day	8.4	8.4	8.7	8.6
28-day	9.7	11.5	11.4	11.0
28 day permeability coulombs passed:	$35x10^2$	$12.5x10^2$	$11.5x10^2$	$17.5x10^2$

Example 6: ASTM Class F fly ash is now the most commonly used pozzolanic admixture in the U.S., but it is known to be much less reactive than amorphous RHA and takes substantially longer curing periods than 28 days to develop high strength and impermeability. This example illustrates how a partial replacement of fly ash with RHA can make a drastic improvement in the impermeability of concrete even at 28-d. The properties of a reference concrete mixture containing 675 lb/yd^3 portland cement, 1500 lb/yd^3 fine aggregate, 1600 lb/yd^3 coarse aggregate, 3 $liters/yd^3$ superplasticizer, and 237 lb/yd^3 water were compared with corresponding mixtures containing a 20% fly ash additive by weight of the cement (i.e., 135 lb/yd^3 fly ash), or 10% Class F fly and 10% (67.5 lb each of Class F fly ash and RHA No.

1) All the fly ash used in this Example met the ASTM C 595 physical and chemical requirements of Class F fly ash. The 28-d compressive strength and permeability test data are as follows:

Concrete mixture	Comprehensive strength, ksi	Permeability, coulombs
Reference concrete	8.7	2,930
20% fly ash addition	8.4	2,270
10% fly ash + 10% RHA	9.6	4,50

The data shows that the use of 20% Class F fly ash alone as an additive in concrete did not result in a significant change in the 28-day compressive strength and permeability of concrete. The concrete permeability rating as per the AASHTO test was "moderately permeable" for both the reference concrete and the concrete containing fly ash without RHA. Whereas the addition of 10% fly ash and 10% RHA increased the strength by only 10%, it reduced the coulombs passed to approximately one-seventh of the value obtained by the reference concrete, and one-fifth of the value obtained by the concrete containing just the fly ash. The very low rating exhibited by the concrete mixture containing 10% fly ash and 10% RHA provides a method for making highly impermeable concretes using fly ash-RHA mixtures containing only 10% RHA. However, as shown in Table 4, about 15% or more RHA by weight of cement was needed to obtain a very low permeability rating when RHA alone was used. The improved properties of portland cement concrete resulting from the addition of 10% RHA by weight of the portland-RHA cement to a concrete, which already contained fly ash as a mineral admixture, can also be obtained if a blended Type IP or Type I(PM) cement containing pozzolanic or cementitious admixtures, as defined by ASTM C 595 are used in place of pure portland cement. It is not essential to use pure portland cement (ASTM C 150) for the purposes of obtaining increased compressive strength and low or very

low permeability. Similar results may be obtained by using Type 1P or Type I(PM) blended hydraulic cement, instead of pure portland cement.

Example 7: This example illustrates the particle size range of RHA that is covered by this invention. For this test, RHA No. 1 was used in three different particle size ranges as described below:

(Sample L): In the as-received condition 75% of particles in the whole sample were above 75μm and the surface area was 24.3 m^2/g by B.E.T. nitrogen adsorption.

(Sample G): This was the material produced by lightly grinding Sample L so that 80% of the particles were in the range of 10 to 77 μm and the median particle diameter was 38μm (See Figure 1 for a full particle size analysis). The B.E.T. surface area by nitrogen adsorption was 25.5 m^2/g, which shows that light grinding had little or almost no effect on the surface area. As stated above, most of the described tests (e.g., Tests A-E) were carried out with this RHA (i.e. lightly ground RHA No. 1).

(Sample U): This is ultra-finely ground ash so that 80% of the particles are in the 1-6 μm range and the median particle diameter is approximately 3 μm (see Figure 2 for a full particle size analysis). The B.E.T. surface area of the sample by nitrogen adsorption is 26.5 m^2/g, which shows again that grinding of RHA has little or no effect on the surface area since most of the surface resides in the cellular structure of the material. Due to the high surface charges developed by ultra-fine grinding, the powder has a tendency to flocculate.

The incorporation of this ash in the form of dry powder into the concrete mixture, using the standard mixing procedure (ASTM C 192), was difficult because the material could not be uniformly dispersed. As a result, the mixing procedure of the concrete structure containing RHA-U was modified as follows. The ash was first dispersed in the form of a slurry, using the mixing water and the superplasticizers specified for use in the concrete mixture. To the slurry, portland cement, fine aggregate, and coarse aggregate were added during the mixing operation.

Concrete mixtures having the mix proportions of Test B (see Table 3) were made with blended cements containing 10% RHA No. 1 of three different particle size, L, G. and U. The resulting 28-day compressive strength and permeability test data are shown in Table 6.

Table 6

Concrete mixture	Comprehensive strength, ksi	Permeability, coulombs
Reference concrete	9.7	3,500
10% RHA-L	9.9	3,300
10% RHA-G	11.5	1,250
10% RHA-U	12.0	880

The data shows that the use of as-received RHA containing very large particles (e.g. Sample L, where 75% of the particles are greater than 75μm) did not result in any improvement in blended cement concrete properties, such as strength and impermeability. This may be due to lack of a homogeneous distribution of RHA in the concrete mixture. When compared to the reference concrete, the blended cement products containing the lightly-ground RHA (Sample G) and finely-ground RHA (Sample U) showed relatively small increases in the compressive strength (19, and 23%, respectively). However, they showed dramatic improvements in impermeability. For instance the coulombs passed into

the AASHTO T-277 test were reduced to approximately one-third and one-forth, respectively (i.e., resulting in the permeability rating from moderate to low or very low). It is suspected that a better homogeneity of concrete made from blended cements containing finer particles of RHA is important for reducing the permeability. However it is clear from the data that for this purpose ultra-fine grinding of the type represented by Sample U is not necessary. For most practical purposes, a rating of "low permeability" is sufficient for good concrete durability, and the field performance of concretes with 880 and 1250 coulombs chloride permeability is not expected to be very different from each other.

The types of pozzolanic RHA used herein conform to a broad range of physical-chemical characteristics, such as 20-100 m^2/g B.E.T. surface area by nitrogen adsorption, up to 35% carbon content, and 60 to 95% silica, of which up to 10% can be crystalline. Since the desired particle size distribution range of RHA in the blended cements described in Tests A-F, etc. is not much different than a typical ASTM Type I portland cement (See, Figure 4) the size range of RHA particles in a interground portland-RHA cement can be expected to be similar to the portland cement size range shown in Figure 4. The unique property of cement products, such as those in Tests B-F (i.e., having low or very low permeability resulting from the incorporation of 10% to 40% RHA in the blended cements), can be achieved from the use of ashes with a broad range of particles as long as most of the particles conform to a particle size distribution in the range of 10 to 75μm.

ACCELERATION OF CONCRETE EARLY STRENGTH

The early strength of concrete mixtures containing fly ash is accelerated by the addition of RHA.

Example 8: ASTM Type 1 standard portland cement, a quartzitic sand (3.0 fineness modulus), and a crushed limestone with 1/2-in. (12 mm) maximum size were used to make a reference (control) concrete. The pozzolans used in the test mixtures included an ASTM Class F fly ash and an amorphous rice hull ash with 90% silica content, 5% carbon content, and 20 m^2/g B.E.T. surface area. The ash had been pulverized to contain less than 10% particles above 75 μm size.

ACI guidelines for proportioning normal-weight concrete mixtures were used to determine the mix proportions for concrete with f_c = 4000-psi (27 MPa), and a 5-6 in. (125-150 mm slump). The mix proportions for the control mixture (Mix No. 1) are shown in the left-hand column of Table 7. The middle column of Table 7 (Mix No. 2) shows the mix proportions of a test mixture containing 20% fly ash by weigh of cement, used as a partial replacement for cement. The right-hand column (Mix No. 3 shows the mix proportion of another test mixture, which contains 10% fly ash and 10% of the pulverized rice hull ash.

Table 7. Mix Proportions of Concrete Mixtures, lb/yd^3 (kg/m^3)

Material	Mix No. 1	Mix No. 2	Mix No. 3
Cement	613 (362)	500 (297)	500 (297)
Fly ash	-	124 (74)	62 (37)
Rich hull ash	-	-	62 (37)
Coarse Aggregate	1840 (1092)	1860 (1104)	1880 (1115)
Fine Aggregate	1250 (742)	1239 (730)	1240 (724)
Water	323 (192)	305 (181)	324 (192)
Water/ cementitious ratio	0.53	0.49	0.52

All the concrete mixtures showed excellent workability. The water-reducing characteristic of the fly ash is obvious from the fact that compared to the control mix, approximately 6% less water content was needed to obtain a similar slump (6 in. or 150 mm). This was probably due to the very high internal surface of the rice hull ash, Mix No. 3 gave a lower slump (5 in. instead of 6 in.) at a water content similar to the reference mix, although this concrete was found to be more cohesive and workable than the control.

ASTM standard test procedures were used for mixing, casting, and curing concrete. Cylindrical, 4 by 8 in. (100 by 200 mm) specimens were made for testing the uniaxial compressive strength of concrete at test ages 3-, 7-, and 28-day. The compressive strength data, average of triplicate specimens, are shown in Table 8.

Table 8. Compressive Strength of Concrete Mixtures, psi (MPa)

Test Age	Mix No. 1	Mix No. 2	Mix No. 3
3-d	1720 (11.9)	1310 (9.0)	1510 (10.4)
7-d	2930 (20.2)	2390 (16.5)	2530 (17.4)
28-d	4850 (33.4)	4060 (28.0)	4320 (29.8)

Compared to the control, the concrete mixture containing only the fly ash gave approximately 20% lower compressive strength at early ages (3-d, 7-d) than the control. At 28-d the strength difference was somewhat lower (17%) which is indicative of the influence of slow pozzolanic reaction. This is consistent with the earlier observations of many researchers. Compared to Mix No. 2 (containing fly ash only), the compressive strength of concretes containing fly ash and rice hull ash (Mix No. 3) were found to be significantly higher at all test ages. Instead of 17-20% lower strengths with fly ash concretes the strengths of Mix No. 3 concretes were only 10-12% lower than the reference concrete at all test ages. Rice hull ash is therefore effective in making up a portion of the early-age strength loss attributable to the use of fly ash alone as a pozzolan.

INDUSTRIAL APPLICABILITY

Due to the impermeability-improving and early strength acceleration characteristics of RHA used in this invention, RHA has the potential of becoming a valuable material for the cement and concrete industries. It can be a pozzolanic additive for producing blended portland cements or an anhydrous pozzolanic admixture for direct addition to concrete mixtures.

WHAT IS CLAIMED IS:

1. A composition for use in concrete or mortar comprising Portland cement and from 5% to 40% siliceous ash by weight of Portland cement, said ash being from crop residue and from 60-95% by weight of silica and wherein at least 90% of said silica is amorphous and at least 75% of said ash particles are in the size range of from 4 to 75 micrometers, with at least 10% of said ash particles having a size greater than 75 micrometers, and the ash particles have a mean particle diameter measured by laser-light-scattering of at least 6 micrometers and a B.E.T. surface area of at least $20m^2/g$.

2. The composition of Claim 1 wherein the median particle diameter is from 15 to 38 micrometers.

3. The composition of Claim 1 wherein the crop residue is rice hull.

4. The composition of Claim 1 wherein the Portland cement and ash are anhydrous.

5. A composition for use in concrete or mortar comprising a pozzolan-Portland blended hydraulic cement and from 5-40% siliceous ash by weight of said hydraulic cement, said ash being from crop residue and 60-95% by weight of silica and wherein at least 90% of said silica is amorphous, at least 75% of said ash particles have a size distribution range from 4 to 75 micrometers, with at least 10% of said ash particles having a size greater than 75 micrometers, and the ash particles have a mean particle diameter measured by laser-light-scattering of at least 6 micrometers and a B.E.T. surface area of at least $20m^2/g$.

6. In a cement product comprising a Portland cement of Type I (PM) or Type IP hydraulic cement, fine aggregate, coarse aggregate and siliceous ash from crop residue, the improvement providing low permeability comprising said ash being from 60-95% by weight silica, wherein the weight percent of the ash is from 10-40% by dry weight of the hydraulic cement used in forming the cement product, at least 90% of said silica is amorphous, at least 75% of said ash particles are in the size range of 4 to 75 micrometers, with at least 10% of

said ash particles having a size greater than 75 micrometers, and the ash particles have a mean particle diameter measured by laser-light-scattering of at least 6 micrometers and a B.E.T. surface area of at least $20m^2/g$.

7. The product of Claim 6 wherein the siliceous ash from crop residue is rice hull ash.

8. The product of Claim 7 wherein at least 75% of said ash particles are in the size range of 10 to 75 micrometers.

9. In a cement product comprising a Portland cement of Type I (PM) or Type IP hydraulic cement, fine aggregate, coarse aggregate and siliceous ash from crop residue, the improvement providing very low permeability comprising said ash being from 60-95% by weight silica, wherein the weight percent of the ash is from 15-30% by dry weight of the hydraulic cement used in forming the cement product, at least 90% of said silica is amorphous, at least 75% of said ash particles are in the size range of 4 to 75 micrometers, with at least 10% of said ash particles having a size greater than 75 micrometers, and the ash particles have a mean particle diameter measured by laser-light- scattering of at least 6 micrometers and a B.E.T. surface area of at least $20m^2/g$.

10. In a method of obtaining a cement product in which there is mixed a hydraulic cement composition comprising a Portland cement of Type I (PM) or Type IP hydraulic cement with fine aggregate, coarse aggregate, water and siliceous ash from crop residue, and the cement composition is allowed to harden, the improvement providing low permeability comprising said ash being at least 85% by weight silica and no greater than 10% by weight carbon and wherein at least 90% of said silica is amorphous, at least 75% of said ash particles are in the size range of 4 to 75 micrometers with at least 10% of said ash particles having a size greater than 75 micrometers, the particles have a mean particle diameter measured by laser-light-scattering of at least 6 micrometers and a B.E.T. surface area of at least $20m^2/g$ and the weight percent of the ash in the cement composition is from 15-30% by weight of the dry weight of the hydraulic cement used in forming the cement product.

11. In a method of obtaining a cement product in which there is mixed a hydraulic cement composition comprising a Portland cement of Type I (PM) or Type IP hydraulic cement with fine aggregate, coarse aggregate, water and siliceous ash from crop residue, and the cement composition is allowed to harden, the improvement providing very low permeability comprising said ash being at least 85% by weight silica and no greater than 10% by weight carbon and wherein at least 90% of said silica is amorphous, at least 75% of said ash particles are in the size range of 4 to 75 micrometers, with at least 10% of said ash particles having a size greater than 75 micrometers, the particles have a mean particle diameter measured by laser-light-scattering of at least 6 micrometers and a B.E.T. surface area of at least $20m^2/g$ and the weight percent of the ash in the cement composition is from 15-30% by dry weight of the hydraulic cement used in forming the cement product.

12. In a cement composition comprising a mixture of Portland cement of Type I (PM) or Type IP hydraulic cement, fine aggregate, coarse aggregate, rice hull ash and water, the improvement providing high strength and very low permeability comprising said ash being at least 85% by weight silica and no greater than 10% by weight carbon and wherein at least 90% of said silica is amorphous, at least 75% of said ash particles are in the size range of 4 to 75 micrometers, with at least 10% of said ash particles having a size greater than 75 micrometers, the particles have a mean particle diameter measured by laser-light-scattering of at least 6 micrometers and a B.E.T. surface area of at least $20m^2/g$ and the weight percent of the ash in the cement composition is from 15-30% by dry weight of the hydraulic cement used in forming the cement composition.

13. A composition for use in concrete or mortar comprising Portland cement of Type (PM) or Type IP hydraulic cement and 10%-30% siliceous ash by weight of cement, said ash being from crop residue and 60-95% by weight silica and wherein at least 90% of said silica is amorphous, at least 75% of said ash has a size distribution range from 4 to 75 micrometers, with at least 10% of said ash having a size greater than 75 micrometers, and the ash has a mean particle diameter measured by laser-light-scattering of 6 to 38 micrometers and a B.E.T. surface area of at least $20m^2/g$.

14. In a method for decreasing the permeability of a cement product in which there is mixed a hydraulic cement composition comprising a Portland cement of Type I (PM) or Type IP hydraulic cement, fine aggregate, coarse aggregate, water and siliceous ash from crop residue, and the cement composition is allowed to harden, the improvement comprising said ash being at least 60% by weight silica and no greater than 40% by weight carbon and wherein at least 90% of said silica is amorphous, at least 75% of said ash has a size distribution range of from 4 to 75 micrometers, with at least 50% of said ash being less than 75 micrometers and at least 10% of said ash being greater than 75 micrometers, the ash having a mean particle diameter measured by laser-light-scattering of 6 to 38 micrometers and a B.E.T. surface area of at least $20m^2/g$ and the percent of the ash in the cement composition is in the range from 5% to 40% by dry weight of the hydraulic cement used in forming the cement product.

15. A composition for use in concrete or mortar comprising a pozzolan-Portland blended hydraulic cement, and from 5-40% siliceous ash by weight of the hydraulic cement, said ash being from crop residue and from 60-95% by weight silica and wherein at least 90% of said silica is amorphous, at least 75% of said ash particles have a size distribution range from 4 to 75 micrometers, with at least 10% of said ash particles having a size greater than 75 micrometers, and the ash particles have a mean particle diameter measured by laser-light-scattering of at least 6 micrometers and a B.E.T. surface area of at least $20m^2/g$.

16. In a cement product comprising a pozzolan-Portland blended hydraulic cement, fine aggregate, coarse aggregate and siliceous ash from crop residue, the improvement providing very low permeability comprising said ash being from 60-95% by weight silica, wherein the weight percent of the ash is from 15-30% by dry weight of the hydraulic cement used in forming the cement product, at least 90% of said silica is amorphous, at least 75% of said ash particles are in the size range of 4 to 75 micrometers, with at least 10% of said ash particles having a size greater than 75 micrometers, and said ash particles have a mean particle diameter measured by laser-light-scattering of at least 6 micrometers and a B.E.T. surface area of at least $20m^2/g$.

17. In a method for obtaining a cement product in which there is mixed a hydraulic cement

composition comprising a pozzolan-Portland blended hydraulic cement, fine aggregate, coarse aggregate, water and siliceous ash from crop residue, and the cement composition is allowed to harden, the improvement providing very low permeability comprising said ash being at least 85% by weight silica and no greater than 10% by weight carbon and wherein at least 90% of said silica is amorphous, at least 75% of said ash particles are in the size range of 4 to 75 micrometers, with at least 10% of said ash particles having a size greater than 75 micrometers, the particles have a mean particle diameter measured by laser-light-scattering of at least 6 micrometers and a B.E.T. surface area of at least $20m^2/g$ and the weight percent of the ash in the cement composition is from 15-30% by dry weight of the hydraulic cement used in forming the cement product.

18. In a method for obtaining a concrete product in which there is mixed a hydraulic cement composition comprising Portland cement of Type I (PM) or Type IP hydraulic cement, fine aggregate, coarse aggregate, water and siliceous ash from crop residue, and the cement composition is allowed to harden, the improvement providing very low permeability comprising said crop residue siliceous ash being at least 85% by weight silica and no greater than 10% by weight carbon and wherein at least 90% of said silica is amorphous, at least 75% of said crop residue siliceous ash particles are in the size range of 4 to 75 micrometers and at least 10% of said crop residue siliceous ash particles have a size greater than 75 micrometers, the crop residue siliceous ash particles have a mean particle diameter measured by laser-light-scattering of at least 6 micrometers and a B.E.T. surface area of at least $20m^2/g$ and the weight percent in the cement composition is 10% crop residue siliceous ash by dry weight of the hydraulic cement used in forming the cement product and 10% fly ash by dry weight of the hydraulic cement used in forming the cement product.

19. In a method for obtaining a concrete product in which there is mixed a hydraulic cement composition comprising Portland cement of Type I (PM) or Type IP hydraulic cement, fine aggregate, coarse aggregate, water and siliceous ash from crop residue and fly ash, and the cement composition is allowed to harden, the improvement providing better than moderate permeability comprising said siliceous ash from crop residue being at least 60% by weight silica and no greater than 40% by weight carbon and wherein at least 90% of said silica is

amorphous, at least 75% of said siliceous ash particles from crop residue are in the size range of 4 to 75 micrometers, and at least 10% of said crop residue siliceous ash particles have a size greater than 75 micrometers, the siliceous ash from crop residue has a mean particle diameter measured by laser-light-scattering of from 6 to 38 micrometers and a B.E.T. surface area of at least $20m^2/g$ and the weight percent of ash in the cement composition is from 10% crop residue siliceous ash by dry weight of the hydraulic cement used in forming the cement product and from 10% fly ash by dry weight of the hydraulic cement used in forming the cement product.

20. The composition of Claim 1 wherein the percent of siliceous ash is from 13% to 40% by weight of cement.

21. The cement product of Claim 6 wherein the percent of ash is from 13% to 40% by weight of cement.

22. The composition of Claim 13 wherein the percent of ash is from 13% to 30% by weight of cement.

FIG.—1

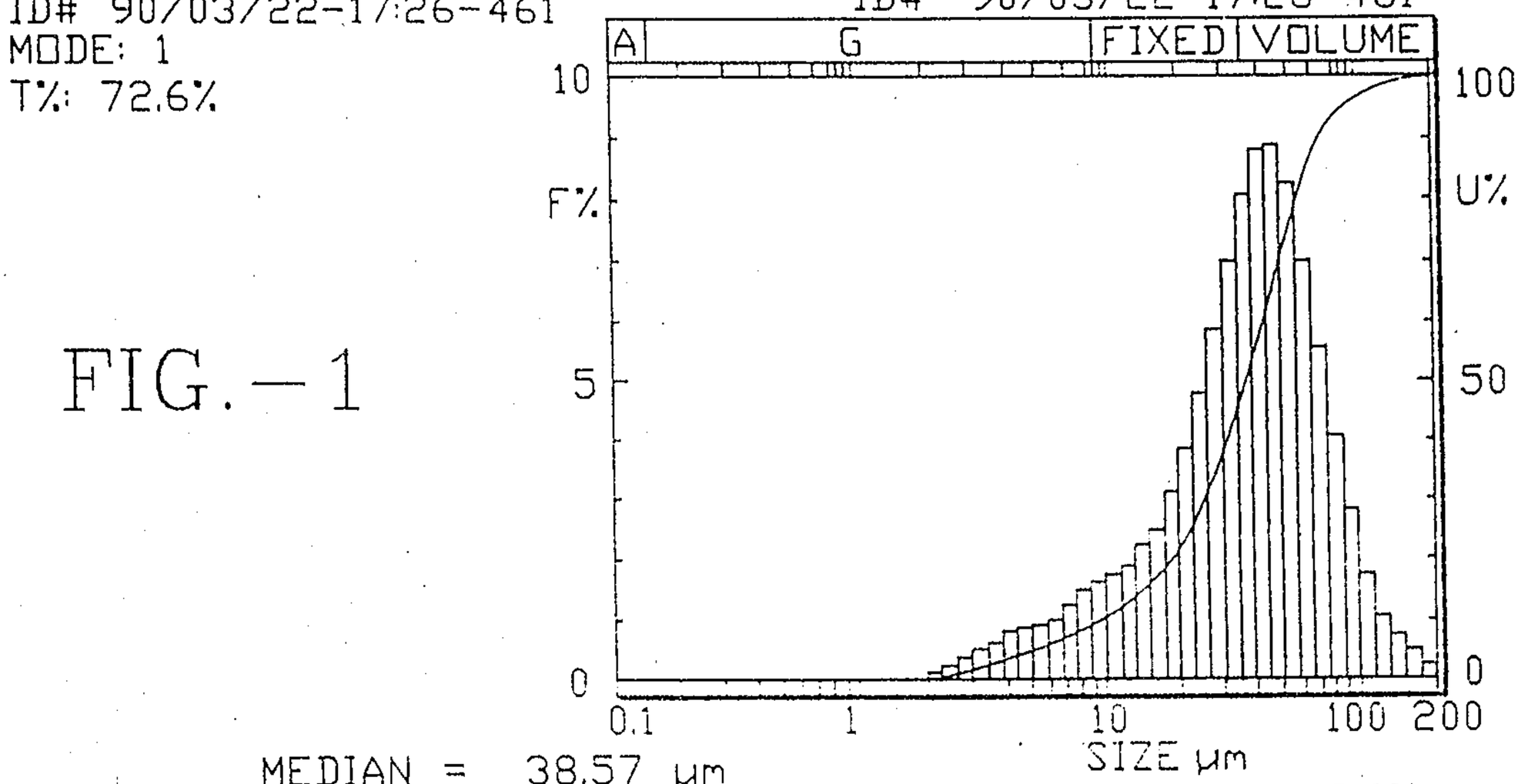

DISTRIBUTION TABLE

SEG. =	SIZE (MICRONS)	INTVL %	UNDER SIZE%
(01)	200.0	0.2	100.0
(02)	174.6	0.4	99.8
(03)	152.4	0.6	99.5
(04)	133.1	1.1	98.8
(05)	116.2	1.7	97.8
(06)	101.4	2.8	96.0
(07)	88.58	4.0	93.2
(08)	77.34	5.5	89.2
(09)	67.52	7.0	83.7
(10)	58.95	8.2	76.7
(11)	51.47	8.8	68.5
(12)	44.94	8.7	59.7
(13)	39.23	8.1	51.0
(14)	34.25	7.0	42.9
(15)	29.91	5.9	35.9
(16)	26.11	4.8	30.0
(17)	22.80	3.9	25.2
(18)	19.90	3.1	21.4
(19)	17.38	2.6	18.2
(20)	15.17	2.2	15.6
(21)	13.25	1.9	13.4
(22)	11.56	1.7	11.5
(23)	10.10	1.6	9.8
(24)	8.82	1.5	8.1
(25)	7.70	1.3	6.6
(26)	6.72	1.1	5.3
(27)	5.87	0.9	4.2
(28)	5.12	0.9	3.3
(29)	4.47	0.7	2.4
(30)	3.90	0.6	1.7
(31)	3.41	0.4	1.1
(32)	2.98	0.3	0.7
(33)	2.60	0.2	0.3
(34)	2.27	0.1	0.1
(35)	1.98	0.0	0.0
(36)	1.73	0.0	0.0
(37)	1.51	0.0	0.0
(38)	1.32	0.0	0.0
(39)	1.15	0.0	0.0
(40)	1.00	0.0	0.0
(41)	0.88	0.0	0.0
(42)	0.77	0.0	0.0
(43)	0.67	0.0	0.0
(44)	0.58	0.0	0.0
(45)	0.51	0.0	0.0
(46)	0.45	0.0	0.0
(47)	0.39	0.0	0.0
(48)	0.34	0.0	0.0
(49)	0.30	0.0	0.0
(50)	0.26	0.0	0.0
(51)	0.23	0.0	0.0
(52)	0.20	0.0	0.0
(53)	0.17	0.0	0.0
(54)	0.15	0.0	0.0
(55)	0.13	0.0	0.0
(56)	0.11	0.0	0.0

2\4

FIG.—2

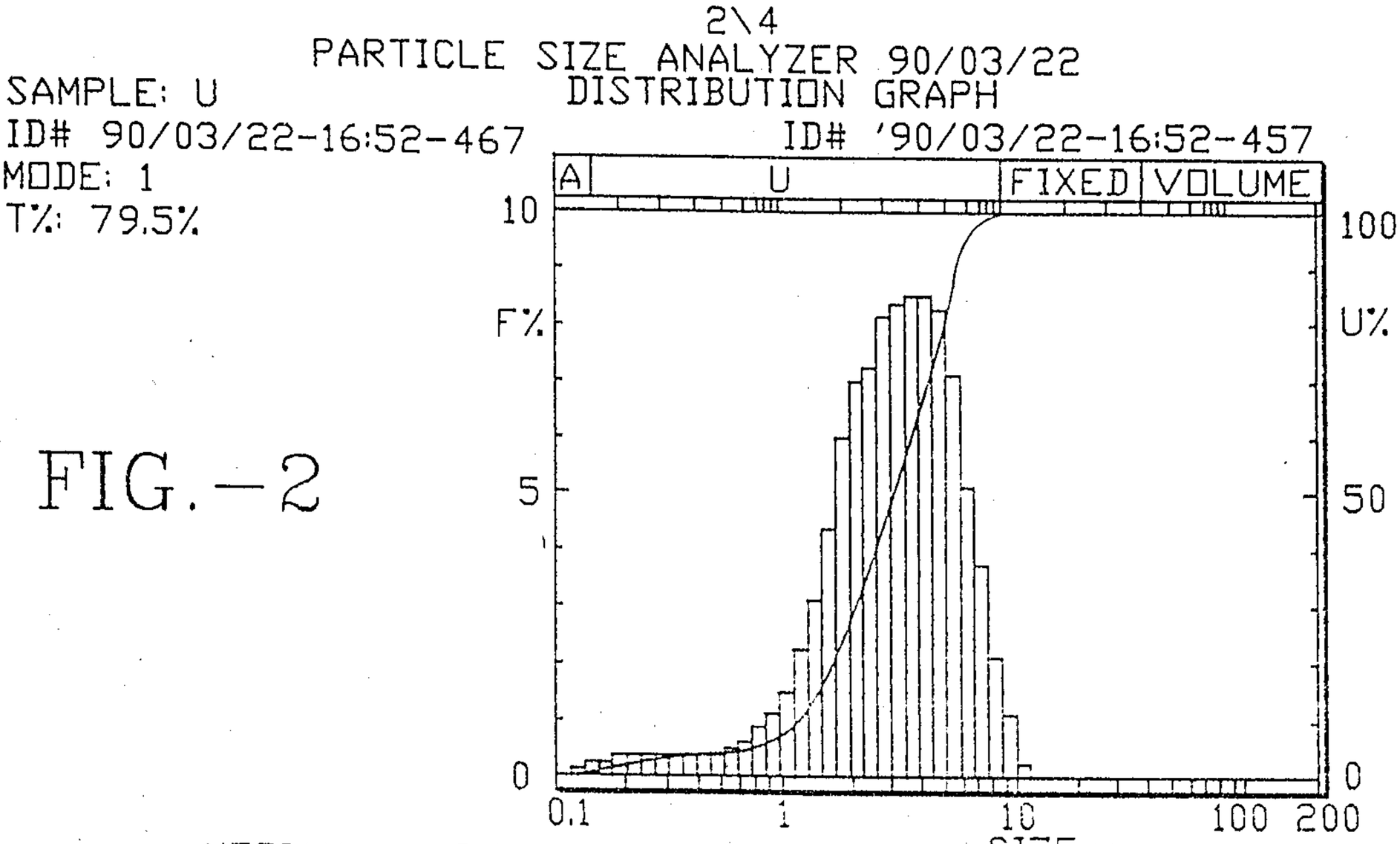

MEDIAN = 2.80 µm

SP.AREA =32235 CM^2/CM^3

% ON DIA: 10.0 µm = 99.7%

DIA ON %: 90.0%= 5.58 µm

DISTRIBUTION TABLE

SEG. =	SIZE INTVL UNDER (MICRONS)	%	SIZE%
(01)	200.0	0.0	100.0
(02)	174.6	0.0	100.0
(03)	152.4	0.0	100.0
(04)	133.1	0.0	100.0
(05)	116.2	0.0	100.0
(06)	101.4	0.0	100.0
(07)	88.58	0.0	100.0
(08)	77.34	0.0	100.0
(09)	67.52	0.0	100.0
(10)	58.95	0.0	100.0
(11)	51.47	0.0	100.0
(12)	44.94	0.0	100.0
(13)	39.23	0.0	100.0
(14)	34.25	0.0	100.0
(15)	29.91	0.0	100.0
(16)	26.11	0.0	100.0
(17)	22.80	0.0	100.0
(18)	19.90	0.0	100.0
(19)	17.38	0.0	100.0
(20)	15.17	0.0	100.0
(21)	13.25	0.0	100.0
(22)	11.56	0.2	100.0
(23)	10.10	0.6	99.8
(24)	8.82	1.2	99.2
(25)	7.70	2.3	98.0
(26)	6.72	3.7	95.6
(27)	5.87	5.1	91.9
(28)	5.12	7.1	86.8
(29)	4.47	8.4	79.7
(30)	3.90	8.7	71.3
(31)	3.41	8.7	62.6
(32)	2.98	8.6	53.9
(33)	2.60	8.3	45.3
(34)	2.27	7.4	37.0
(35)	1.98	6.9	29.7
(36)	1.73	5.8	22.8
(37)	1.51	4.5	17.0
(38)	1.32	3.3	12.5
(39)	1.15	2.3	9.2
(40)	1.00	1.5	6.9
(41)	0.88	1.0	5.4
(42)	0.77	0.7	4.4
(43)	0.67	0.5	3.8
(44)	0.58	0.4	3.3
(45)	0.51	0.3	3.0
(46)	0.45	0.3	2.7
(47)	0.39	0.3	2.4
(48)	0.34	0.3	2.1
(49)	0.30	0.3	1.8
(50)	0.26	0.3	1.5
(51)	0.23	0.3	1.2
(52)	0.20	0.3	0.9
(53)	0.17	0.3	0.6
(54)	0.15	0.2	0.4
(55)	0.13	0.2	0.2
(56)	0.11	0.0	0.0

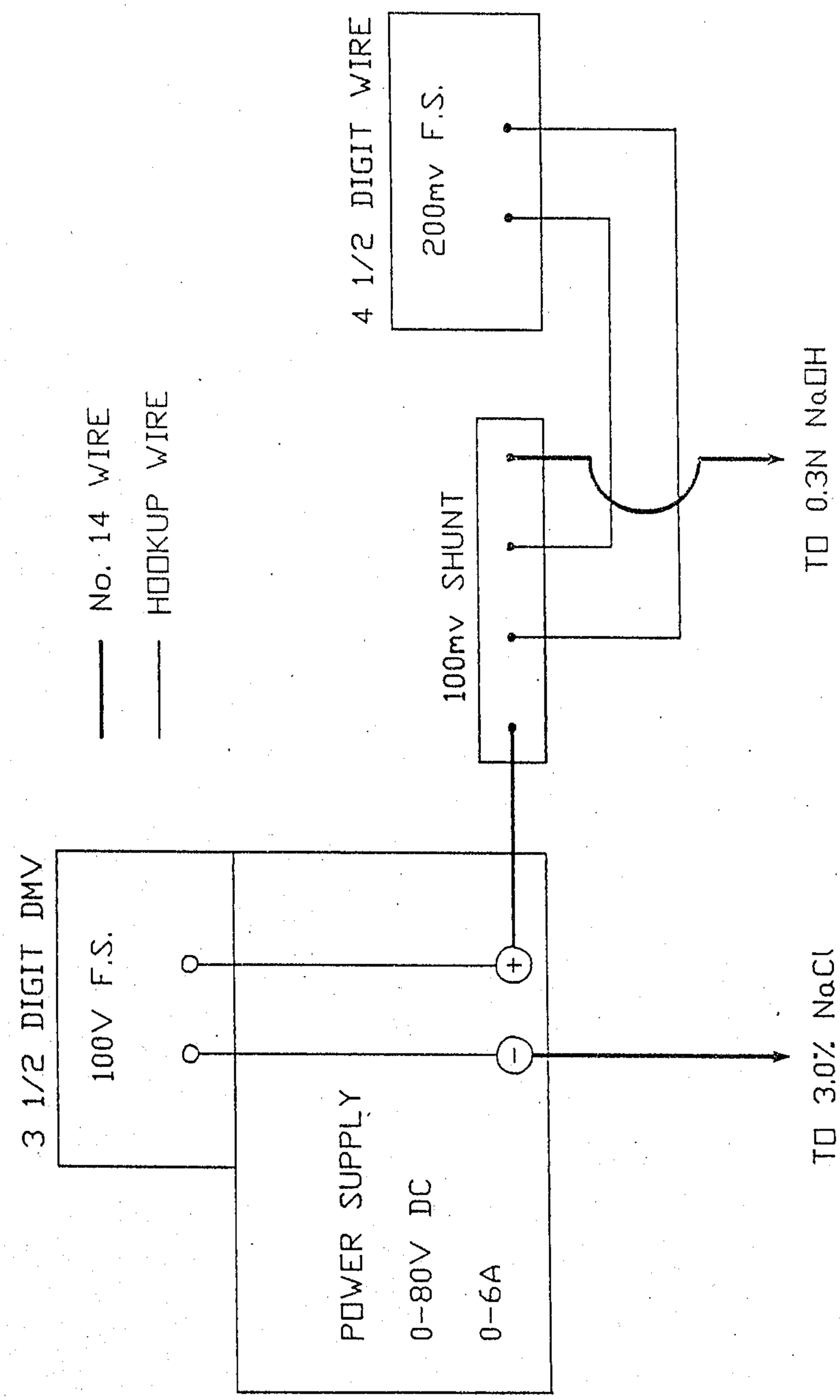

ELECTRICAL BLOCK DIAGRAM

FIG.—3

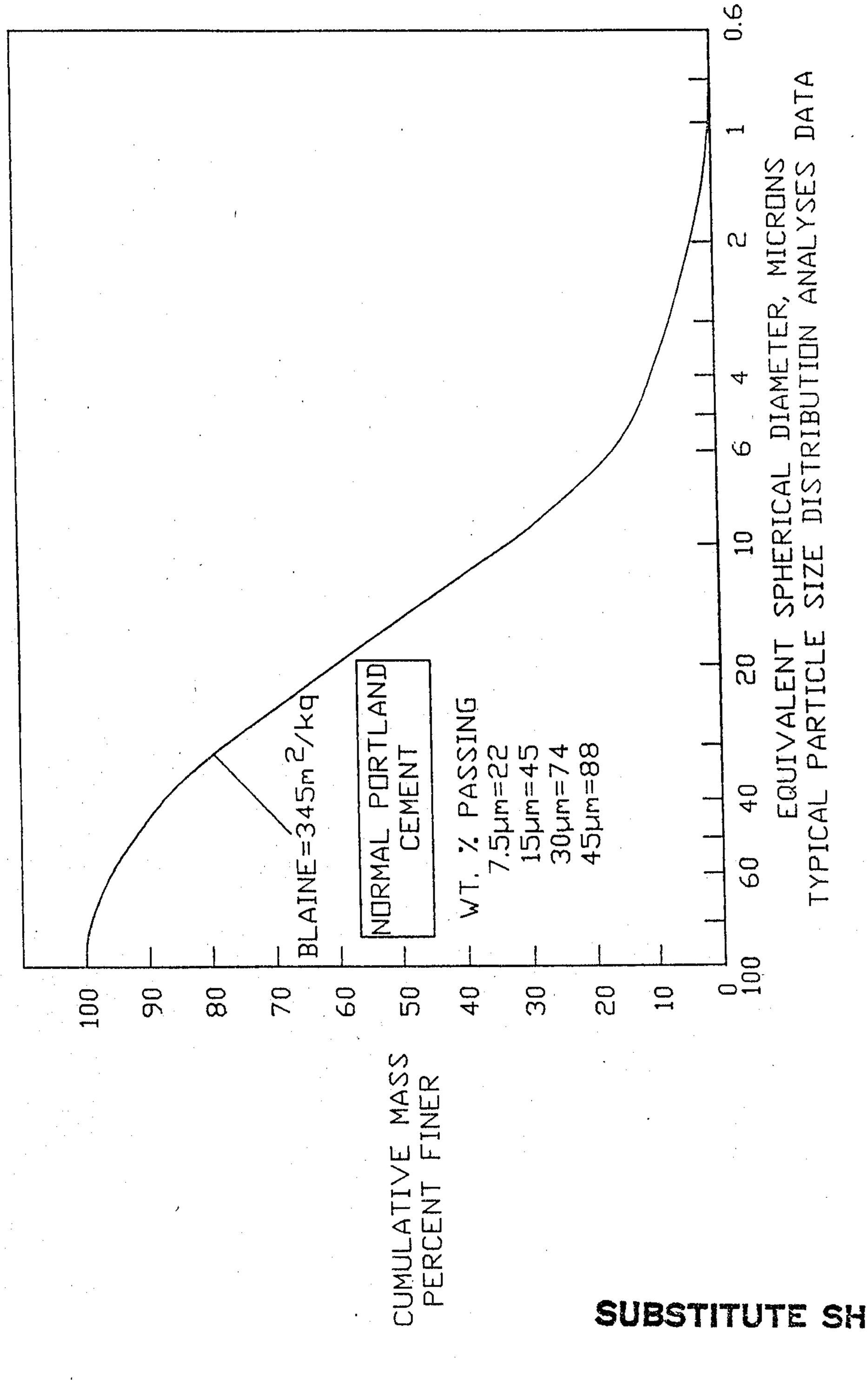
CUMULATIVE MASS
PERCENT FINER
100
90
80
70
60
50
40
30
20
10
0
10
20
40
60
0
2
4
6
1
0.6
EQUIVALENT SPHERICAL DIAMETER, MICRONS
TYPICAL PARTICLE SIZE DISTRIBUTION ANALYSES DATA
BLAINE=345m²/kg
NORMAL PORTLAND CEMENT
WT. % PASSING
7.5µm=22
15µm=45
30µm=74
45µm=88

FIG.—4