(12) INTERNATIONAL APPLICATION PUBLISHED UNDER THE PATENT COOPERATION TREATY (PCT)

(19) World Intellectual Property Organization
International Bureau

(43) International Publication Date
16 July 2009 (16.07.2009)

PCT

(10) International Publication Number
WO 2009/089146 A1

(51) International Patent Classification:
H01F 27/42 (2006.01) *H01F 38/00* (2006.01)
H01F 37/00 (2006.01)

(21) International Application Number:
PCT/US2009/030098

(22) International Filing Date: 5 January 2009 (05.01.2009)

(25) Filing Language: English

(26) Publication Language: English

(30) Priority Data:
61/019,153 4 January 2008 (04.01.2008) US

(71) Applicant *(for all designated States except US)*: **POWERCAST CORPORATION** [US/US]; 114 North Saint Clair Street, Ligonier, Pennsylvania 15658 (US).

(72) Inventors; and

(75) Inventors/Applicants *(for US only)*: **GREENE, Charles E.** [US/US]; 1266 Cornplanter Road, Cabot, Pennsylvania 16023 (US). **MCELHINNY, Michael T.** [US/US]; 1335 Beverly Road, Port Vue, Pennsylvania 15133 (US). **BRAILOVSKY, Alexander** [US/US]; 1022 Shawnee Ridge Drive, Cheswick, Pennsylvania 15026 (US). **PESAVENTO, Philip Victor** [US/US]; 401 Pierpont Heights, Morgantown, West Virginia 26508 (US).

(74) Agent: **SEARLE, Benjamin M.**; Cooley Godward Kronish LLP, Attn: Patent Group, 777 6th St., NW, Suite 1100, Washington, District Of Columbia 20001 (US).

(81) Designated States *(unless otherwise indicated, for every kind of national protection available)*: AE, AG, AL, AM, AO, AT, AU, AZ, BA, BB, BG, BH, BR, BW, BY, BZ, CA, CH, CN, CO, CR, CU, CZ, DE, DK, DM, DO, DZ, EC, EE, EG, ES, FI, GB, GD, GE, GH, GM, GT, HN, HR, HU, ID, IL, IN, IS, JP, KE, KG, KM, KN, KP, KR, KZ, LA, LC, LK, LR, LS, LT, LU, LY, MA, MD, ME, MG, MK, MN, MW, MX, MY, MZ, NA, NG, NI, NO, NZ, OM, PG, PH, PL, PT, RO, RS, RU, SC, SD, SE, SG, SK, SL, SM, ST, SV, SY, TJ, TM, TN, TR, TT, TZ, UA, UG, US, UZ, VC, VN, ZA, ZM, ZW.

(84) Designated States *(unless otherwise indicated, for every kind of regional protection available)*: ARIPO (BW, GH, GM, KE, LS, MW, MZ, NA, SD, SL, SZ, TZ, UG, ZM, ZW), Eurasian (AM, AZ, BY, KG, KZ, MD, RU, TJ, TM), European (AT, BE, BG, CH, CY, CZ, DE, DK, EE, ES, FI, FR, GB, GR, HR, HU, IE, IS, IT, LT, LU, LV, MC, MK, MT, NL, NO, PL, PT, RO, SE, SI, SK, TR), OAPI (BF, BJ, CF, CG, CI, CM, GA, GN, GQ, GW, ML, MR, NE, SN, TD, TG).

Published:
— *with international search report*

WO 2009/089146 A1

(54) Title: POWER TRANSMISSION BY ELECTRIC FIELD

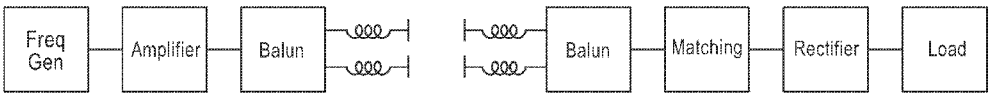

Fig.1

(57) Abstract: A method and an apparatus according to an embodiment of the invention includes a transmitter and/or a receiver for transferring power wirelessly. The power transfer between the transmitter and the receiver can occur by electric field.

POWER TRANSMISSION BY ELECTRIC FIELD

Related Application

[1001] This application claims priority to U.S. Patent Application Serial No. 61/019,153, filed on January 4, 2008, and entitled "Power Transmission By Electric Field," which is incorporated herein by reference in its entirety.

Background

[1002] The invention relates generally to wireless power transfer and more particularly to devices and methods for power transmission by electric field.

[1003] Near-field power transfer relies on electromagnetic fields just as far-field power transfer does. Inductive solutions primarily utilize the magnetic portion of the electromagnetic field. Inductive solutions, however, tend to be large due to the size of the coils used to transfer the power. Moreover, the coils do not have a high degree of flexibility to be contoured.

[1004] Thus, a need exists for improvements in near-field power transfer.

Summary

[1005] In one embodiment, a system includes a transmitter and a receiver. The transmitter includes a radio frequency energy generator, a first transmitting plate, and a second transmitting plate. The first transmitting plate is operatively coupled to the radio frequency energy generator. The second transmitting plate is operatively coupled to a ground. The receiver includes a rectifier, a first receiving plate, and a second receiving plate. The first receiving plate is operatively coupled to the rectifier. The first receiving plate is configured to be capacitively coupled to the first transmitting plate. The second receiving plate is configured to be capacitively coupled to the second transmitting plate. The second receiving plate is operatively coupled to a ground.

Brief Description of the Drawings

[1006] FIGS. 1-5 are schematic diagrams of a receiver and/or a transmitter used to transfer power wirelessly by electric field, according to embodiments.

[1007] FIG. 6 is a diagram of an unbalanced set of plates for wireless power transfer, according to an embodiment.

[1008] FIGS. 7-10 are schematic diagrams of a receiver and/or a transmitter used to transfer power wirelessly by electric field, according to embodiments.

[1009] FIGS. 11A and 11B are top views of capacitive plates of different sizes, according to an embodiment.

[1010] FIG. 11C is a side view of capacitive plates of different sizes, according to an embodiment.

[1011] FIGS. 12A, 12B, and 12C are diagrams of capacitive plates of different sizes, according to an embodiment.

[1012] FIGS. 13-14 are schematic diagrams of a receiver and/or a transmitter used to transfer power wirelessly by electric field, according to an embodiment.

[1013] FIG. 15 is a diagram of a plates used in a balanced system, according to an embodiment.

[1014] FIGS. 16A and 16B are diagrams of a shield of the device as a capacitive plate, according to an embodiment.

[1015] FIG. 17 is a diagram of coupling between transmitting plates, according to an embodiment.

[1016] FIGS. 18A and 18B are front views of buffer plates, according to an embodiment.

[1017] FIG. 18C is a side view of buffer plates, according to an embodiment.

[1018] FIG. 19 is a schematic diagram of a transmitter with object or device sensing functionality, according to an embodiment.

[1019] FIG. 20 is a schematic diagram of a receiver with signaling functionality, according to an embodiment.

[1020] FIG. 21 is a schematic diagram of a system that can transfer power wirelessly by electric field with communication functionality between the transmitter and the receiver, according to an embodiment.

[1021] FIG. 22 is a schematic diagram of a receiver with a charge management circuit, according to an embodiment.

[1022] FIG. 23 is a schematic diagram of a charge management circuit, according to an embodiment.

[1023] FIG. 24A is a schematic diagram of an impedance matching or tuning circuit, according to an embodiment.

[1024] FIG. 24B is a schematic diagram of an impedance matching or tuning circuit, according to an embodiment.

[1025] FIG. 25 is a schematic diagram of step-up and step-down transformers, according to an embodiment.

[1026] FIG. 26 is a schematic diagram of a rectifier, according to an embodiment.

[1027] FIG. 27A is a top view of a rectifier integrated circuit, according to an embodiment.

[1028] FIG. 27B is a side view of a rectifier integrated circuit, according to an embodiment

[1029] FIG. 28 is a schematic diagram of an integrated circuit that includes a rectifier and a charge management circuit, according to an embodiment.

[1030] FIG. 29 is a diagram of a receiver in a dongle, according to an embodiment.

[1031] FIG. 30 is a diagram of a transmitter in a dongle, according to an embodiment.

[1032] FIG. 31 is a schematic diagram of a receiver and/or a transmitter used to transfer power wirelessly by electric field, according to an embodiment.

[1033] FIGS. 32-33 are flow charts illustrating a method according to an embodiment.

Detailed Description

[1034] Referring to figure 1, one embodiment the system including a frequency generator for generating the operating frequency of the system. In one example, the frequency can be within an industrial, scientific, and medical (ISM) band. The frequency generator can be an oscillator, resonator, clock, etc. The frequency generator can be followed by a filter (not shown) to remove any unwanted harmonics or spurious frequencies. The filter can be a simple low-pass or a band-pass topology. The output from the frequency generator is connected to an amplifier or driver circuit. The amplifier increases the power level of the frequency to the proper level to achieve the desired power transfer to the device. The amplifier can be a standard 50 ohm amplifier chip or module, it can be a non-standard impedance such as 100 ohms, or it can be a non-fifty ohm source such as an operational amplifier. In any of these cases, the amplifier can be a power or voltage source.

[1035] The amplifier can output a single ended (unbalanced) or differential (balanced) signal. For an unbalanced signal, the amplifier can be connected to a first balun to transform the unbalanced signal to a balanced signal. The first balun can be implemented with a balun transformer, microstrip lines, or discrete components. The output of the first balun is connected to a first tuning element(s), which is used to maximize the amount of energy transferred from the transmitting plates to the receiving plates. It should be noted that the first tuning element(s), although drawn as inductors, can be capacitors or some combination of inductors or capacitors (shunt or series), or L, Pi, or T-networks or some combination of these networks or any other tuning network depending on the size and shape of the plates used within the system. The first tuning element(s) is connected to the transmitting plates. The connection mechanism can include, but is not limited to, soldered or hardwired connection or a spring loaded or pressure contact.

[1036] The transmitting plates establish an electric field, which couples to the receiving plates. The plates can be formed by the use of adhesive backed copper foil, copper plates formed on a PCB, copper plates spayed or formed onto or into a plastic enclosure or device cradle, or any other method that could be used to form the conductive plates. The plates can also be formed out of any other metal or conducting element or compound found to sufficiently conduct the required current such as, but not limited to, gold, silver, impregnated plastic, aluminum, etc. The plates can take any shape, size, thickness, volume, or contour found to be advantageous for the application.

[1037] The receiving plates, which may or may not be the in the same form as the transmitting plates, are connected to a second tuning element(s), which is used to maximize the amount of energy transferred from the transmitting plates to the receiving plates. It should be noted that the second tuning element(s), although drawn as inductors, can be capacitors or some combination of inductors or capacitors (shunt or series), or L, Pi, or T-networks or some combination of these networks or any other tuning network depending on the size and shape of the plates used within the system. The second tuning element(s) is connected to a second balun. The second balun can be implemented with a balun transformer, microstrip lines, or discrete components. The output of the second balun is connected to a matching network, which is used to match the rectifier to a desired impedance to maximize the DC energy supplied to the load.

[1038] The matching network can be implemented with an L-network, Pi-network, T-network, microstrip matching, or any other device or network that would help aid in matching. The matching network is connected to the rectifier, which is used to transform the transferred energy to a usable form such as DC. The rectifier can be a voltage doubler, bridge rectifier, full-wave rectifier, half-wave rectifier, or any other type of rectifier that converts AC to DC. The rectifier can have an efficiency of, for example, greater than 50%. The output of the rectifier is connected to the load. The load can be a battery, device, LED, resistor, heating element, etc. The rectifier can connect to a charge management circuit (not shown), which is then connect to the load. The charge management circuit is used to regulate or control the amount, duration, timing, etc. of the energy supplied by the rectifier that is deliver to the load.

[1039] It should be noted that matching or tuning components can be placed in front of the first balun (or after the second balun) if found to be advantageous. As an example, for certain system configurations, a series capacitor before the balun can improve the impedance match with the amplifier and can increase the power output to the device. When a substantially similar series capacitor is added after the second balun, the performance can also be improved. It should also be noted that the first tuning element(s) can be placed before the balun and the balun can be directly connected to the transmitting plates. Likewise, the second tuning element(s) can be placed after the second balun and the second balun can be directly connected to the receiving plates. Additionally, referring to Figure 31, placing capacitors or inductors in positions A, B, C, and/or D can aid in tuning and significantly reduce the value of the series components (drawn as inductor, however can be capacitors for

certain applications). As an example, for a frequency range of 6-41 MHz, a shunt capacitance placed in positions B and C can provide a 5-10 time reduction in the size of the series resonant inductors required for all plate sizes.

[1040] Figure 2 shows a schematic representation of the system shown in Figure 1 where the load is shown as a resistive element. From this schematic, it can be seen that the inductors are in series with one another. As an example, L_1 and L_2 are in series and, L_3 and - L_4 are in series. By rearranging the schematic, L_1 and L_2 can be added together and replaced by a single inductor. As Figure 3 shows, if L_1 and L_2 have the same value, a single inductor can be used with a value of $2L_1$. Figure 4 shows a block diagram of an example of a hardware implementation of the schematic shown in Figure 3. As can be seen, the single inductors have been placed on the transmitter side as most receiving devices demand the smallest size possible. It is possible to place the inductors on the receiving side if found to be advantageous. The system shown in Figure 4 has another advantage, the inductors and capacitors form a series L-C circuit. The potential between the inductor and capacitor can become very large depending on the Q of the LCR system. However, as the system is implemented, only the transmitter plate will exhibit this high potential as the point between the inductor and capacitor occurs only on the transmitter side. This factor will allow the receiving device to be implemented with less regard to high potential making it easier to implement.

[1041] Figure 5 shows a schematic view of the receiving side of the system shown in Figures 1 and 2. The matching has been implemented with, for example, a shunt 6.8 pF capacitor and a series 8.2 nH inductor to form an L-network. The rectifier has been implemented with, for example, a voltage doubler connected to a 0.1 uF filter/storage capacitor, which is connected to the 500-ohm load.

[1042] In certain applications, a balanced system may not be advantageous. In these cases, an unbalanced system can be used. Figure 6 shows an example of an unbalanced set of plates. The plates are connected to the transmitter/receiver through the SMA connector using a coaxial cable (unbalanced). The SMA connector is connected to a microstrip transmission line and the ground plane on the PCB. In this example, the microstrip line is sized to have a 50-ohm impedance. In this example, the 50-ohm line contains a break with 0603 pads where a 7.5 nH inductor is placed as the tuning element. As can be seen in Figure 6, the ground plane is used as the negative (or ground) plate and the microstrip transmission line, which is

formed on the back layer, is connected to the positive plate through a via. The ground plate is made larger than the positive plate due to the unbalanced nature of this system. The plates can be formed on 31 mil FR4 material. The system can be designed for 4 mm nominal spacing between the plates. Two identical sets of plates can be used and can be mounted together using the mounting holes in the corners of the PCB. Both PCBs contained the same tuning element. The first unbalanced PCB plate set is connected to the amplifier in the transmitter unit and the second unbalanced PCB plate set is connected to a 50-ohm rectifier. The transmission through the plates can be greater than 90%, for example.

[1043] An example of a block diagram of the system in Figure 6 can be seen in Figure 7. As can be seen, due to the unbalanced nature of this system, the negative plates on the transmitter and receiver sides are connected to the respective grounds without the need for a tuning element on the negative plate. Additionally, the two inductors in Figure 7, as was shown in Figures 2 and 3, are in series and can be combined together. Therefore, the unbalanced system can be constructed with a single inductor as shown in Figure 8. It should be noted that the systems shown in Figures 6-8 can be independent of baluns because the system is unbalanced. Additionally, baluns can be removed from a system by using a balanced amplifier or a balanced rectifier. An example of a completely balanced system can be seen in Figure 13. An example of a balanced rectifier can be seen in Figure 14.

[1044] Referring to Figure 9, the size of the receiving device is usually desired to be as small as possible. It, therefore, becomes advantageous to move all possible components to the transmitter side. It has been shown that the entire or part of the impedance matching for the rectifier can be implemented on the transmitter side. The resulting system shown in Figure 9, can be implemented by having receiver plates and a rectifier in the device (load), thus reducing the size required for implementation. It should be noted that this technique can be performed in both a balanced and unbalanced system. Figure 9 shows an optional inductor that can be used depending on the configuration. Additionally, a balun can be used before or after the matching if the plates are configured in a balanced way.

[1045] Figure 10 shows a schematic for an unbalanced system where the matching has been moved to the transmitting side of the system. The two inductors can be combined if the correct inductance can be obtained with a single inductor. In this case, two inductors are used to obtain the optimal value. As can be seen in this example, the matching and tuning element can be combined together to form a single impedance matching and tuning network.

[1046] Referring to Figures 11A, 11B, and 11C, in certain applications, the transmitter and receiver plates can be of different size and/or shape. Figures 11A and 11B are top views of capacitive plates of different sizes, according to an embodiment. Figure 11C is a side view of capacitive plates of different sizes, according to an embodiment. As an example, it can be desirable in a certain application that the receiver plates have dimensions no bigger than 1.5 inches by 2 inches. However, the transmitter plate size need not be restricted in a like manner. By over sizing the transmitter plates to 3 inches by 3 inches each, the capacitance between the transmitter and receiver plates can be increased. This increase in capacitance can occur by bending of the electric field from the transmitter plates to the receiver plates. This can be seen in Figures 12A, 12B, and 12C. This bending or spreading of the field (illustrated by the arrows between the plates in Figures 12A 12B, and 12C) becomes very relevant when the transmitter and receiver plates are separated by a lossy dielectric such as, but not limited to, saline or the human body. The loss within the dielectric is reduced by increasing the area across which the electric field (displacement current) flows. Bending the field by having larger transmitter plate set effectively increases the area the electric field flows through which reduces the loss in the dielectric and increases the system efficiency. The larger transmitter plate set also makes the system less sensitive to the relative position of the plates. As the example in Figure 11A shows, if the 0.875 inch by 1.5 inch receiver plates are initially places at the center of the 3 inch by 3 inch plates, the receiver can move left and right by 1.06 inches and up and down by 0.75 inches while maintaining approximately the same capacitance between the transmitter and receiver plates thus not requiring system adjustment to maintain the transferred power.

[1047] Referring to Figure 15, in certain applications, it can be desirable for the receiver (or transmitter) to spin about an axis or center. The plate configuration shown in Figure 15 can be used for such an application. In this example, the plates can be used for a balanced system. The positive plate has an area, A. The negative plate can have the same area, A. The transmitter and receiver plate sets are designed to be substantially similar. Because both plates have the same area, the capacitance between the transmitter and receiver positive plates is the same and the capacitance between the transmitter and receiver negative plates is the same. This means the tuning elements would be identical resulting in a balanced system. In the case where a balanced system is not advantageous, one of the plates (positive or negative, preferably the negative) could be designed to have an area greater than the other plate in the set. In some embodiments, the larger plate can have an area of at least two to three times that

of the smaller plate in the set. Also, one plate can be fed by an unbalanced transmission line where the transmission line uses the other plate as a reference (such as ground). Two sets of plates shown in Figure 15 are able to spin about the center when properly aligned and not affect performance.

[1048] Referring to Figures 16A and 16B, the shield of the device can be used as one of the capacitive plates. In some embodiments, the shield is used as the negative plate in an unbalanced system. As the example in Figure 16A shows, devices can typically have a metallic shield to reduce spurious emissions from the device. The shield is usually connected to the ground of the device, thus making a suitable option for the negative plate in an unbalanced system. As illustrated in Figure 16B, to form the positive plate a small hole is made in the shield and a wire is connected from the rectifier (or driver if the transmitter is shielded) to the positive plate external to the shield. The shield is connected to the ground or negative of the rectifier or driver. In certain applications, the positive plate can have a coating to insulate the plate from the outside surroundings. This coating can be designed to be implanted within the body of a human or animal, and the shield can be the outside casing of an implanted medical device. The positive plate can be spaced far enough away from the shield to avoid direct coupling from the positive plate to the negative plate. In some embodiments, the positive plate is spaced at a distance from the negative plate that produces a parasitic capacitance that aids in the impedance matching of the system. As an example, the embodiment shown in Figure 5 includes a 6.8 pF capacitor to match the rectifier to the proper impedance. In an unbalanced system, this capacitor would be across the positive and negative plates (balun need not be required). Thus, the positive plate could be placed at a distance to produce 6.8 pF of capacitance and this discrete component (i.e., the capacitor) could be eliminated. This example should not be taken as limiting. It is only a single example of how this parasitic capacitance could be used to produce favorable results. As will be explained later, a shunt capacitor of the proper value across the positive and negative plates can increase the transfer efficiency in certain system configurations.

[1049] Referring to Figure 17, in certain applications, such as those involving lossy dielectrics, the capacitance between the plates can cause too much power to couple from the transmitter positive plate to the transmitter negative plate. This coupling causes less power to reach the receiver. Figure 17 shows how some of the electric field couples from one TX plate to the other. In this regard, the two transmitter plates can be moved further apart. However, this may not always be advantageous as there can be a fixed size constraint within the device.

In these cases, buffer plates can be added to the system. This system is illustrated in Figures 18A, 18B, and 18C. Figures 18A and 18B are front views of buffer plates, according to an embodiment. Figure 18C is a side view of buffer plates, according to an embodiment. As Figure 18B shows, given a certain plate size, maximizing the plate area can result in a small d_2, which can lead to too much cross coupling between Plate 1 and Plate 2. Reducing the size to increase d_2 may not be advantageous due to the desired frequency and distance between the transmitting and receiving plates. In these cases, the plate configuration in Figure 18A can be used. In this case, a buffer, plate 3, is inserted between the smaller sized plates, plate 1 and plate 2. The buffer plate increases the distance between plate 1 and plate 2 to d_4. The buffer, plate 3 can then be used in conjunction with plate 4 to add a parallel system operating at a different frequency. The two systems can be designed so that the plates of the other system present a high impedance path back to ground meaning that the adjacent plates will not significantly couple. This type of system can be desirable in, for example, medical applications to spread the field across a greater area to avoid loss in a lossy dielectric such as the human body while avoiding cross coupling.

[1050] Referring to Figure 19, it is advantageous in certain applications to know if a device is present at the transmitting plates. This can enable the transmitter to turn off the electric field when a device is not present. One method is to sense reflected power from the transmitter plates. When a device is not present, the plates will provide an impedance that will be mismatched to the driver. The power output from the driver will reflect from the plates and back into the driver. This reflected power can be sensed with a sensing means. An example of a sensing means is a directional coupler. The directional coupler could be used to measure the reflected power by connecting the reflected port to a detector. The detector would convert the AC power from the directional coupler to DC which could be supplied to a controller. The controller could be implemented with a microcontroller with a built-in ADC. The output voltage from the detector could then be digitized and read by the microcontroller to tell the system how much power was being reflected. If the power was above a threshold, the microcontroller could shut down the driver or frequency generator. The microcontroller could periodically wake up to sample for a device by turning the power on momentarily and checking the reflected power. If power did not reflect, the device would be present and the system would continue to supply power. Else, the system would turn back off for a period of time. As an example, the system could sample once per second.

[1051] Referring to Figure 20, in certain applications, an object that is not a valid device can present a proper impedance. In this case, the system can obtain more information from the device to authenticate the device. The device can have a signaling means, such as but not limited to, a magnet that not only properly aligns the device but also switches a switch in the transmitter that is sensitive to the magnetic field. This switch could be connected to the controller which would enable or disable the power to the transmitter plates. Additionally, the signaling means can be a mirror used to reflect all or part of a light spectrum in order to authenticate the device. As an example, the mirror can reflect an IR wavelength and/or blue light but not red light. In another method, the device can produce a tone or sound when the transmitter samples. The transmitter could include a piezoelectric element or other sound sensing device to sense the tone or sound at which time the transmitter would continue to send power. It should be noted that these examples should not be taken as limiting. Other ways of signaling are available and could be used to sense the device and enable the power transfer.

[1052] Referring to Figure 21, the transmitter and receiver can include a communication means for sending data. The communication means can be an RF communication link, load modulating means in the receiver and a load sensing means in the transmitter, an IR data link, an acoustical data link, or any other link used to send unidirectional or bi-directional data. These types of data links are well known to those skilled in the art. The communication means can be connected to controllers used to control the transmitter and receiver.

[1053] The transmitter operational flow diagram, shown in Figure 32, conveys an example of one of many processes that can be used in sending power to the receiver. After turning on, the transmitter goes through a phase, displayed as "start-up" in the figure, where everything is set to run. After a delay, the transmitter outputs AC power from the transmitter plates for a short period of time, shown as the "sample." If a device is present, the transmitter receives identification from the device ensuring it is a valid device and in fact a receiver. If a device is not present, or a device is present but not a valid device (a receiver), the transmitter stops transmitting AC power from the plates, and returns to standby. After standing by and another delay, the transmitter once again "samples." As stated before, the transmitter can use the reflection from the transmitting plates to determine if a device is present. It was also mentioned that the device present can be device other than a receiver, and the transmitter can determine this before continuing the power transmission. Means of determining a valid device have been described previously and could include, but are not limited to, a digital ID

or simple magnet. The transmitter receives the devices power requirements before adjusting its output to the correct level. If the transmitter receives a valid response from the device, it will adjust the output to the requested power. After a delay, the transmitter once again, will ask the device for its power requirements. If the device replies that it no longer needs power because the charge is complete, the transmitter stops transmitting AC power from the transmitter plates. However, if the device requests a power level, the transmitter adjusts if necessary, and transmits the desired power level.

[1054] The receiver also has an operational flow diagram. One example of the many flow diagrams is shown in Figure 33. If power is received from a transmitter, the receiver identifies itself to the transmitter by means described previously. The transmitter requests this identification of the device, as stated above and shown in Figure 32. After receiving a request from the transmitter to send the power requirements, the receiver measures or reads the power requirements. This information can come from the charge management circuit mentioned previously or by measuring the output voltage from the charge management circuit or rectifier. After retrieving the power requirements, the receiver signals or communicates the power requirements to the transmitter. If the transmitter does not send the desired power level, the receiver will "shut down," and return to the original state. Only when the receiver determines that the power received matches the power requested, will it allow the charge to enter the device.

[1055] Referring to Figure 22, the output of the rectifier can be connected to a charge management circuit. The purpose of the charge management circuit is to hold the voltage at V_1 at an optimum value to produce the highest conversion efficiency of the rectifier. The output of the rectifier will achieve maximum conversion efficiency at a specific output voltage. As the voltage deviates from this value, the conversion efficiency will be reduced. Thus, to achieve a high conversion efficiency, the output voltage can be maintained around the optimum voltage. Additionally, the voltage V_2 can be maintained at a specific voltage for the device to operate properly. The charge management circuit can include a buck converter, boost converter, buck-boost converter, or any other voltage converter. The charge management circuit can also include a voltage monitoring circuit to monitor the output voltage of the rectifier, V_1, and/or the output to the load, V_2. The voltage monitoring circuit can also be connected to a voltage converter to enable or disable the converter based on the measured voltages. Additionally, the voltage monitoring circuit can be connected to a switch on the output of the voltage monitoring circuit to ensure that the voltage is at a proper level

before connecting to the load to avoid damage to the load or device. The switch can be a PMOS transistor, relay or any other switching device. Figure 23 shows a charge management circuit with a DC/DC converter. The converter can be designed to step 15V down to 5V. The voltage monitoring circuit can be implemented with a microcontroller with an integrated ADC to sample both the input voltage V_1 and the output voltage V_2. The microcontroller can be connected to the DC/DC converter shutdown pin to enable or disable the converter. Additionally, the microcontroller can output data to the communication means, which can send data to the transmitter to increase or decrease the output power to hold V_1 and V_2 at the proper values. For example, the voltage at V_1 can be maintained within +/- 25% of the optimum value and the voltage at V_2 can be maintained within +/-5% of the predetermined value.

[1056] Referring to Figures 24A and 24B, the communication means previously described herein can be used to automatically adjust the impedance matching or tuning of the system to account for misalignments, changes in the distance between the transmitting and receiving plates, component tolerances, etc. The receiver can send data informing the transmitter the amount of power it is receiving by measuring the rectified voltage and current. The transmitter can then measure the reflected power as previously described and adjust the tuning elements or matching elements to maximize the power delivered to the device. It should be noted that the maximum transmission to the device may not occur when the reflected power is minimized. If this is the case in a particular application, the transmitter could automatically adjust the tuning elements and matching elements on the transmitter side to minimize the reflected power. Figures 24A and 24B show two examples of how an automatic system could be implemented. The tuning or matching elements can contain a variable inductor (as illustrated in Figure 24A) or a variable capacitor (as illustrated in Figure 24B). These elements could be controlled electronically or mechanically, whichever is found to be advantageous.

[1057] Referring to Figure 25, in certain applications, such as but not limited to lossy dielectric power transfer, it becomes advantageous to include step-down and step-up transformers. As Figure 25 shows, transformers before and after the plates can be used to step down the current through the plates. After transmission through the plates, if necessary, another transformer can be use to step the current back up. It should be noted that these transformers can act as baluns also. Both conventional transformer/baluns and common-mode transformer/baluns can be used. The transformers reduce the current through the

capacitors created by the plate sets. In a lossy dielectric, these capacitors have an equivalent series resistance (ESR) which dissipates power. By stepping the current in capacitor down, the current within the ESR is also reduced and the power dissipated is reduced by the square of the current. In some embodiments, the current can be reduced by at least a factor of two which can reduce the losses by a factor of four. In any of the embodiments, the transmitter and receiver plates can be separated by one or more dielectrics. In some embodiments, the dielectric constant of the material can be greater than 1.5.

Description of Rectifier and Operation

[1058] The rectifier can be constructed from diode(s), and an output capacitance. The output goes directly into a load, or into a charge management circuit, which manages the power entering the load. The input to the rectifier can be the capacitive plates. Anything stated from this point is assumed to be on the receiver side of the plates unless otherwise stated. In some cases a balun can be present between the plates and the rectifier. Matching for the plates can also be desirable, and could be located after the plates and before the balun (if used). In some cases, the plate matching could be located on the transmitter side of the plates only, reducing the overall size of the receiver. Matching for the rectifier can also be desirable, due to the impedance of the diodes at the operating frequency and power level. The matching could be located after the plate matching and balun (if used), but before the rectifier. There are some instances where matching is not needed. When the rectifier is loaded properly at the proper power level, matching is not needed. The matching components should include reactive components so that substantially no power is lost. However, resistors could be used as part of the matching with a loss of power and efficiency if found to be advantageous. The rectifier matching could be located before the inductors on the transmitter side of the plates instead of being located on the receiver side, also reducing the overall size of the receiver. This can be done if the plates are matched to look like a lossless line at the operating frequency. Any of the matching mentioned above can include variable components for optimizing the match manually or automatically. Matching for the plates and the rectifier can be combined into one matching system. Transformers can also be used before and/or after the plates. There is the possibility for higher efficiency with a higher potential across the plates.

[1059] The output capacitance is used to provide an AC return and to hold the DC output potential. The required amount of this capacitance depends on the frequency of operation,

and the impedance of the load/charge management. The output capacitance and the load have a time constant and should be many times larger than the period of the frequency of operation. The capacitance should have a voltage rating that well exceeds the expected output voltage. The matching components could easily see higher voltages than the output, so they should also be rated higher than the voltage across them.

[1060] The diodes, when placed appropriately, can convert the AC to DC. There are three basic rectifier designs (any of which can be used with the embodiments); a single diode that utilizes half of the sine or square wave and uses a DC return (half-wave rectifier), two diodes placed in a voltage doubling configuration (full-wave rectifier), and a bridge configuration (full-wave rectifier). Other more complicated topologies are available and can work. No matter what topology is chosen, the reverse breakdown of the diodes should be higher than the expected reverse potential seen by each diode. Otherwise, current will leak back and will not be seen by the load resulting in a lower efficiency. The charge management circuit, or a Zener diode, can be used to prevent the voltage from exceeding the reverse breakdown voltage of the rectifying diodes.

[1061] Referring to Figure 26, to optimize the efficiency of the rectifier, multiple rectifiers can be placed in parallel. Placing multiple rectifiers in parallel offers several advantages. First, each diode is rated for a specific thermal dissipation. This can be desirable in certain applications because as inefficiencies result in the generation of heat. Paralleling multiple diodes allows the overall rectifier to handle more heat and thus more input power. Additionally, multiple diodes spread the heat over a greater area allowing easier cooling. Second, the forward voltage drop of the diode is directly proportional to the current through it. Paralleling diodes reduces the current through each diode, which reduces the voltage drop across each diode, which reduces the power dissipated by each diode. This includes the losses introduced by the junction and the series resistances. Third, the parallel configuration, in most cases, reduces the optimum output resistance of the rectifier, which enables the circuit to more efficiently drive smaller resistive loads. For battery recharging, the battery's equivalent resistance seen by the rectifier can go down as the charging power or current is increased. Therefore, paralleling diodes maximizes efficiency when charging a battery at a high power level. Figure 26 shows a receiver containing two plates. One plate is connected to receiver ground while the other is connected to the impedance matching network. The output of the impedance matching network is connected to four voltage doublers, although any rectifier topology can be used. Each voltage doubler is connected to a filter capacitor,

although the use of a single capacitor is possible. The output of the voltage doublers are connected to the load which can be a battery, LED, resistor, etc.

[1062] Referring to Figures 27A and 27B, as described above, inefficiency within the rectifier can produce heat. Multiple diodes can be used to spread out the heat sources, however, the area required for the circuitry increases. It, therefore, can become advantageous to integrate all the rectifiers (diodes) into a single rectifier chip. Figure 27A is a top view of a rectifier integrated circuit, according to an embodiment. Figure 27B is a side view of a rectifier integrated circuit, according to an embodiment. As Figures 27A and 27B show, 1 through "n" rectifiers can be integrated into a chip with the inputs and outputs of each tied together. As illustrated in Figure 27B, the chip can have a thermal pad connected to the dies to pull the heat away from the chip. The thermal pad can be connected to the rectifier circuit ground. The thermal pad can be implemented as a pad under the chip (as illustrated in Figure 27B), or as a thermal pin (not shown). If found to be advantageous, the impedance matching and output filter capacitors could be integrated into the chip. It should be noted that all or part of the circuit can be integrated onto a die.

[1063] Referring to Figure 28, the charge management circuit as described previously herein could be integrated within the same chip as the rectifiers. The chip can include additional pins (not shown) to provide information to control the operation of the transmitter. To optimize efficiency and spread out the heat dissipation, multiple diodes can be placed in parallel. The multiple diodes placed in parallel can be in separate packages, all in one package, or in a combination of packages. Placed in this fashion, the current running through each diode is lower than having only one diode. This results in a lower forward voltage drop, meaning higher efficiencies. Each diode can handle a certain amount of power dissipation based on its packaging. If diodes are placed in parallel, the dissipated power can be spread over a wider area. This results in a cooler running rectifier and less chance of failure or destruction. With the forward voltage being lower, but the junction capacitance being higher, there is an optimum number of diodes, placed in parallel, based on the power level. If a thermal pad is used in the packaging of the diodes, the amount of tolerable power dissipation will rise. This is desirable in cases where enough power is transferred, that too many diodes would be needed in parallel. Too many diodes results in junction capacitances which are too high for the operating frequency. When the junction capacitance rises, the amount of AC that gets rectified is reduced. The part of the AC, that does not get rectified, passes through the diode and the output capacitance and returns to the ground. It is also important to reduce the

DC losses based on the forward voltage as this turns to heat. It is possible that parallel diodes are only desired for the series diode, or only for the shunt diode, as well as for both the series and shunt diodes.

[1064] The entire rectifier can be placed in a single package. The package could house the matching, output capacitance, and charge management, as well as the rectifier. The overall package could even include the thermal pad to help dissipate the heat from the diodes. The receiver can also allow for signaling means or communication means. The signaling is used by the receiver and transmitter for optimizing power transfer. The communication means is used for data transfer outside of power management. In some embodiments, a signaling means can be a communication means and/or a communication means can be a signaling means. The signaling and/or communications could be transferred through the same plates that the power is sent through, or by separate means. One example of the use of signaling is that the signaling can come from the charge management communicating to the transmitter to adjust to increase or decrease output power to increase or decrease the power delivered to the load. As an example, the power requirements continually change when recharging a battery. For Li-ion batteries, initially the battery voltage is low and the battery is in a constant current mode. As the battery begins to charge, the voltage rises while the current remains constant meaning more power is required. When a threshold voltage, i.e. 4.2V, is reached, the charger goes into constant voltage mode and the current reduces with time. Thus, the power required is also reduced. From this example, it can be seen that the power requirements can increase then decrease when charging or recharging a battery. It should be noted that if the correct power is not supplied to the receiver, the battery may not charge properly or the receiver can be forced to dissipate excess power. One example of communications is wireless USB. The receiver circuit can have an input for communications from the device.

[1065] Referring to Figure 29, the receiver can be in the form of a dongle. The plates, rectifier, balun (if desired or implemented), matching (if desired or implemented), tuning element(s) (if desired or implemented), communication means or signaling means (if desired or implemented), and/or the charge management can be located within an enclosure. The output would be power for a device that can receive it via optional cable, or by directly connecting to the dongle. The dongle can connect to the device using a connector. The connector can connect to another connector located on the device that can be used for connecting to conventional charging mechanisms, e.g. wired power supply, power from the

USB, etc. The device is the load. The power is received from the transmitting plates in the form of AC and is converted in the receiver, by the rectifier, to DC. An example would be to create a dongle to charge or recharge a cell phone. The dongle can be designed to receive power from a transmitter unit. The dongle can contain a short cable of 3 inches that connects to the mini-USB port located on the cell phone. The dongle would provide power through the cable to the mini-USB connector in order to charge or recharge the battery located within the cell phone. Recharging would occur when the receiver was placed in proximity to the transmitter unit. The transmitter can also be in the form of a dongle. The power for the transmitter dongle would come from a powering mechanism that has a DC output, such as a charging cradle or docking station. Operational power would be transferred via optional cable or direct connection to the dongle. The transmitter is located in the dongle, including the frequency generator, the amplifier or driver, the balun (if desired or implemented), the matching (if desired or implemented), the tuning element(s) (if desired or implemented), and/or the communication means or signaling means (if desired or implemented). It should be noted that the transmitter only, receiver only, or both the transmitter and receiver can be implemented in the form of a dongle.

[1066] In any of the embodiments described herein, the plates can be sized in a manner that makes them self resonant in the given system design. This can be achieved by sizing the plates to the appropriate fraction of a wavelength given the length of the feed line. The resulting system may not require the use of tuning elements and can be viewed as self resonant. It should be noted that the rectifier and/or amplifier can still use matching to achieve the desired system impedance. As an example, the feed line of the system can have a finite inductance at the frequency of operation. If the plates are sized properly and spaced at the correct distance, the capacitance produced between the transmitter and receiver plates can cancel the inductance of the feed lines, thus producing a self resonant system.

[1067] In any of the embodiments described herein, the described system can be used to charge or recharge a battery in parallel with a wired connection. As an example, a cell phone can have a mini-USB connector used to obtain power from a wired power supply. The cell phone can also have any of the charging systems described herein integrated inside. The systems described herein can be diode protected on the output allowing them to be used in parallel with standard charging systems provided the other charging system is protected. The systems can charge concurrently or at separate times.

[1068] In one embodiment, an apparatus comprises a receiver having receiving plates configured to receive power from transmitting plates of a transmitter through capacitive coupling, the receiver having a rectifier configured to convert the received power to a DC power for a dynamic load.

Conclusion

[1069] While various embodiments have been described above, it should be understood that they have been presented by way of example only, and not limitation. For example, the wireless power receivers and/or the wireless power transmitters described herein can include various combinations and/or sub-combinations of the components and/or features of the different embodiments described. Embodiments of a wireless power receiver can also be provided without the wireless power transmitter described herein.

What is claimed is:

1. A system, comprising:

a transmitter having a radio frequency energy generator, a first transmitting plate, and a second transmitting plate, the first transmitting plate being operatively coupled to the radio frequency energy generator, the second transmitting plate being operatively coupled to a ground; and

a receiver having a rectifier, a first receiving plate configured to be capacitively coupled to the first transmitting plate, and a second receiving plate configured to be capacitively coupled to the second transmitting plate, the first receiving plate being operatively coupled to the rectifier, the second receiving plate being operatively coupled to a ground.

2. The system of claim 1, wherein:

the radio frequency energy generator outputs an unbalanced signal to the first transmitting plate and the second transmitting plate.

3. The system of claim 1, wherein:

the transmitter is configured to wirelessly transfer an energy generated by the radio frequency energy generator to the receiver via an electric field at the first transmitting plate; and

the receiver is configured to receive the energy at the first receiving plate and convert the energy to a direct current voltage at the rectifier.

4. The system of claim 1, wherein a surface area of the first transmitting plate is greater than a surface area of the first receiving plate.

5. The system of claim 1, wherein the transmitter includes a matching module operatively coupled to the first transmitting plate, the matching module configured to match an impedance associated with the first receiving plate of the receiver.

6. The system of claim 1, wherein:

the receiver is disposed within a housing of a device having a conductive shield; and

the conductive shield is the second receiving plate.

7. The system of claim 1, wherein:
the rectifier is a first rectifier; and
the receiver includes a second rectifier coupled in parallel to the first rectifier.

8. The system of claim 1, wherein the transmitter includes a matching module configured to match an impedance associated with the first receiving plate of the receiver, the first transmitting plate movably coupled to the matching module via a spring.

9. The system of claim 1, wherein:
the first transmitting plate is circular;
the first receiving plate is circular; and
the receiver is disposed relative to the transmitter such that the first receiving plate is substantially aligned and rotatable with the first transmitting plate.

10. The system of claim 1, wherein the receiver includes a charge regulation module operatively coupled to an output of the rectifier, the charge regulation module configured to maintain a direct current voltage at an output of the rectifier at a direct current voltage level associated with efficient operation of the rectifier.

11. The system of claim 1, wherein:
the radio frequency energy generator is a first radio frequency energy generator; and
the transmitter includes a second radio frequency energy generator and a third transmitting plate, the third transmitting plate being operatively coupled to the second radio frequency energy generator, the third transmitting plate being disposed between the first transmitting plate and the second transmitting plate.

12. The system of claim 1, wherein the transmitter includes a transformer operatively coupled to the first transmitting plate and the radio frequency energy generator, the transformer configured to reduce a current generated by the radio frequency energy generator and provide the reduced current to the first transmitting plate.

13. The system of claim 1, wherein a surface area of the second transmitting plate is greater than a surface area of the first transmitting plate.

14. The system of claim 1, wherein a surface area of the second receiving plate is greater than a surface area of the first receiving plate.

15. The system of claim 1, wherein:

the transmitter includes a matching module operatively coupled to the first transmitting plate, the matching module configured to match an impedance associated with the first receiving plate of the receiver; and

the first receiving plate of the receiver is operatively coupled to the rectifier independent of a matching module.

16. The system of claim 1, wherein:

the first transmitting plate is associated with radio frequency energy at a first center frequency; and

the transmitter includes a third transmitting plate, the third transmitting plate being operatively coupled to the radio frequency energy generator, the third transmitting plate being associated with a radio frequency energy at a second center frequency, the third transmitting plate being disposed between the first transmitting plate and the second transmitting plate.

17. A system, comprising:

a transmitter configured to radiate a radio frequency energy via an electric field at a transmitter conductive plate, the transmitter having a transmitter signaling module; and

a receiver configured to be capacitively coupled to the transmitter via the transmitter conductive plate at the transmitter and a receiver conductive plate at the receiver, the receiver having a receiver signaling module configured to provide to the transmitter signaling module a signal associated with wireless power transfer from the transmitter to the receiver, the transmitter signaling module is configured to receive the signal.

18. The system of claim 17, wherein the transmitter includes a matching module operatively coupled to the transmitter conductive plate, the matching module adjustable to alter an impedance associated with the transmitter conductive plate, the transmitter configured to cause the matching module to alter the impedance in response to the signal.

19. The system of claim 17, wherein:

the transmitter conductive plate and the receiver conductive plate are separated by a lossy dielectric; and

the transmitter is configured to increase a current associated with the electric field in response to the signal.

20. The system of claim 17, wherein:

the signal is configured to provide to the transmitter an indication associated with proper orientation of the receiver conductive plate with respect to the transmitter conductive plate; and

the transmitter is configured to radiate the radio frequency energy in response to the signal.

21. The system of claim 17, wherein:

the signal is configured to indicate to the transmitter that the receiver is configured to receive the radio frequency energy; and

the transmitter is configured to radiate the radio frequency energy in response to the signal.

22. The system of claim 17, wherein:

the signal is associated with a power requirement of a device operatively coupled to the receiver; and

the transmitter is configured to alter the electric field in response to the signal such that the power requirement of the device is satisfied by a power density of the electric field.

23. A method, comprising:

generating a radio frequency energy;

providing the radio frequency energy to a transmitter plate such that an electric field is generated at the transmitter plate;

detecting a reflected power from the transmitter plate; and

determining based on the detecting whether the transmission plate is coupled to a receiver plate via the electric field such that a portion of the radio frequency energy is transferred to the receiver plate.

24. The method of claim 23, wherein:

the transmitter plate is a first transmitter plate; and

the providing includes providing the radio frequency energy to the first transmitter plate such that the first transmitter plate is unbalanced relative to a ground with a second transmitter plate .

25. The method of claim 23, further comprising interrupting the providing based on the determining such that the electric field is not generated at the transmitter plate during the interrupting.

26. The method of claim 23, wherein the method further comprising adjusting an impedance associated with the transmitter plate based on the detecting such that an efficiency of the portion of the radio frequency energy transferred to the receiver plate is increased in response to the adjusting.

27. The method of claim 23, wherein the method further comprising adjusting an electric current associated with the radio frequency energy based on the detecting such that an efficiency of the portion of the radio frequency energy transferred to the receiver plate is increased in response to the adjusting.

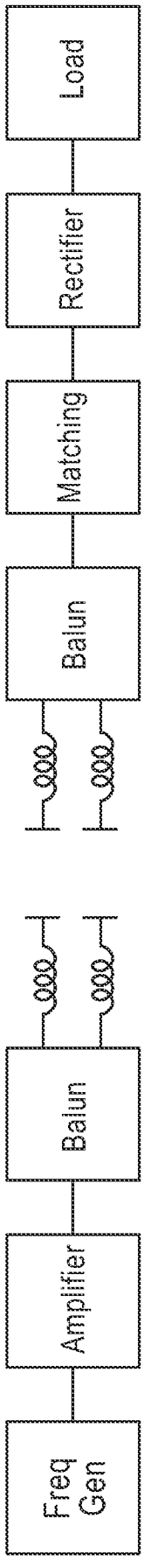

Fig.1

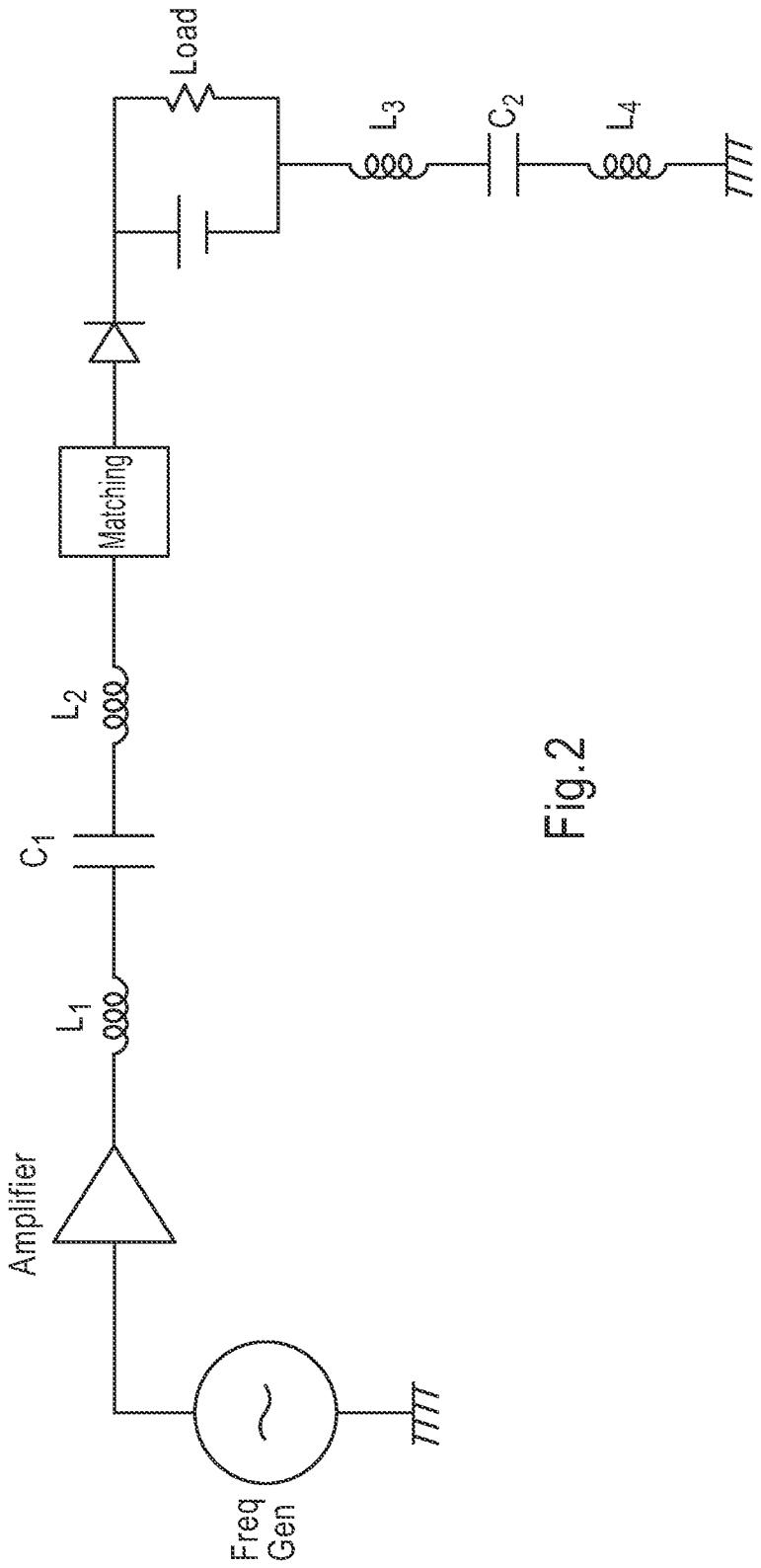

Fig.2

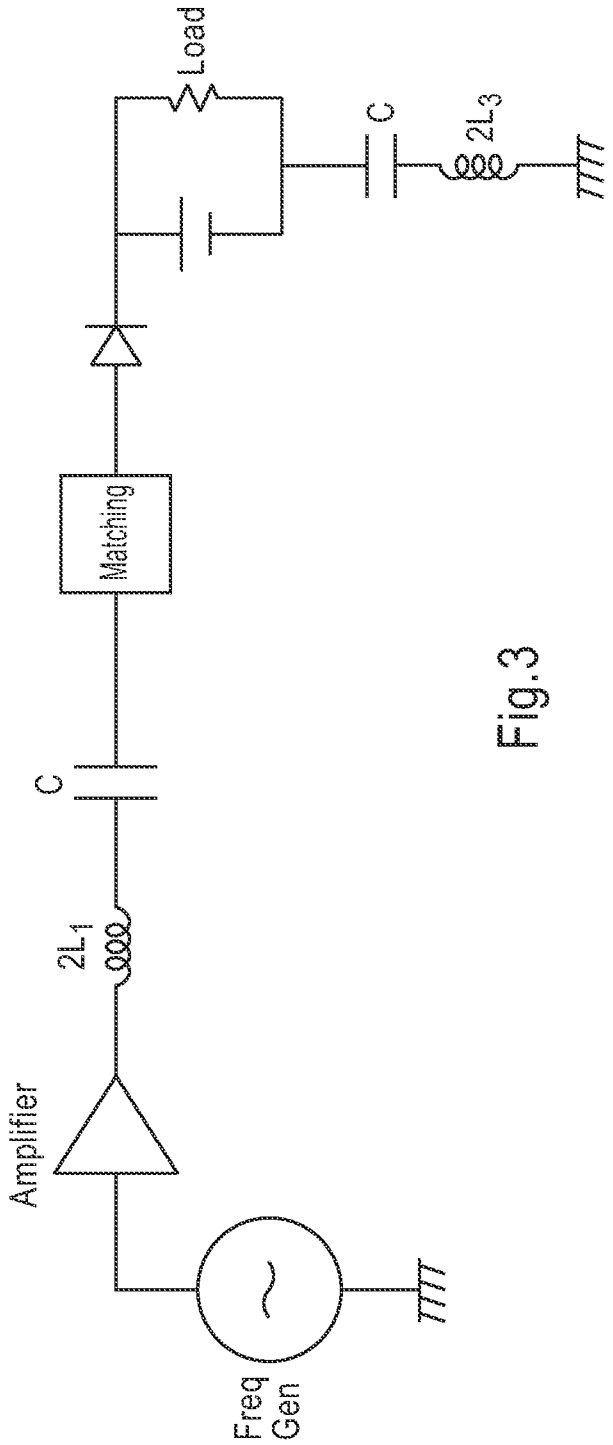
Load
C
2L3
Matching
C
2L1
Amplifier
Freq Gen

Fig.3

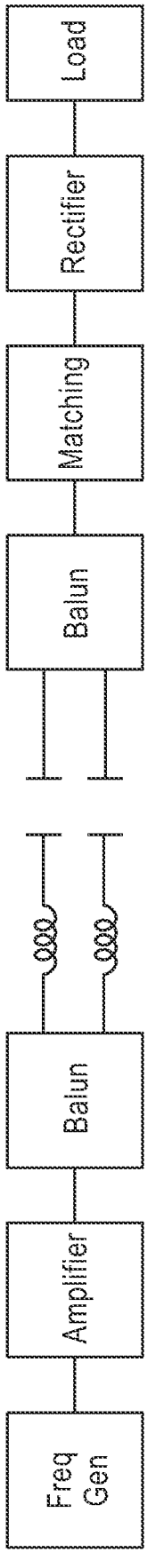
Load
Rectifier
Matching
Balun
Balun
Amplifier
Freq Gen

Fig.4

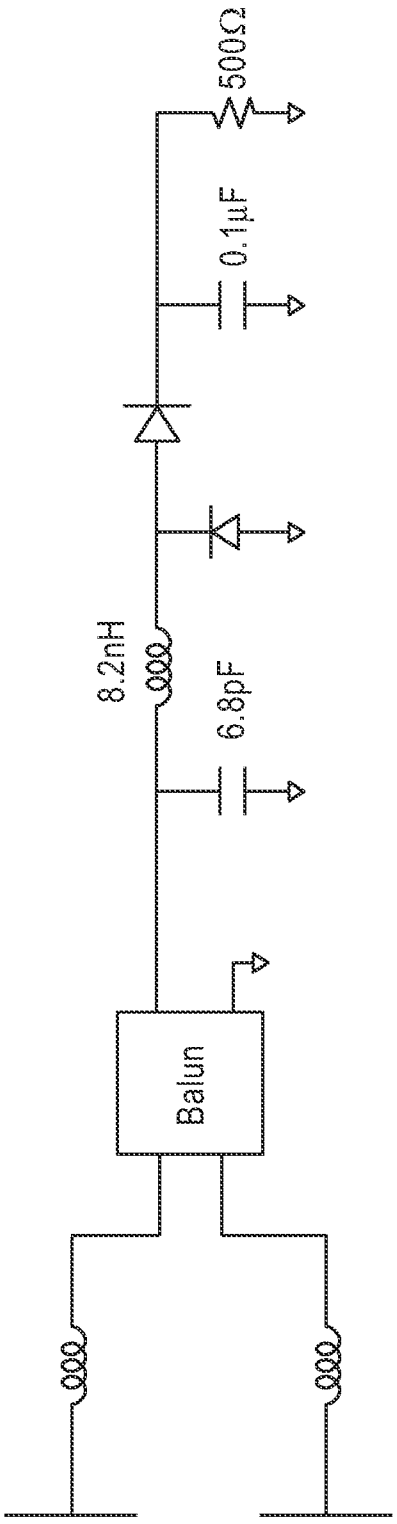

Fig.5

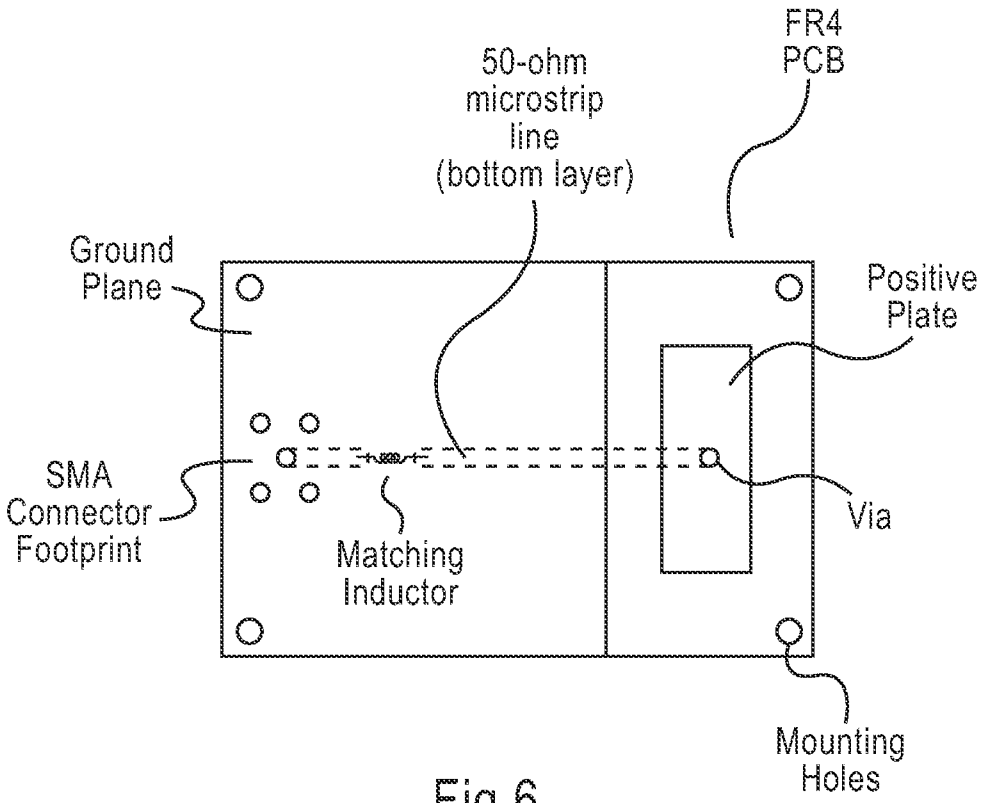
FR4
PCB
50-ohm
microstrip
line
(bottom layer)
Ground
Plane
Positive
Plate
SMA
Connector
Footprint
Matching
Inductor
Via
Mounting
Holes

Fig.6

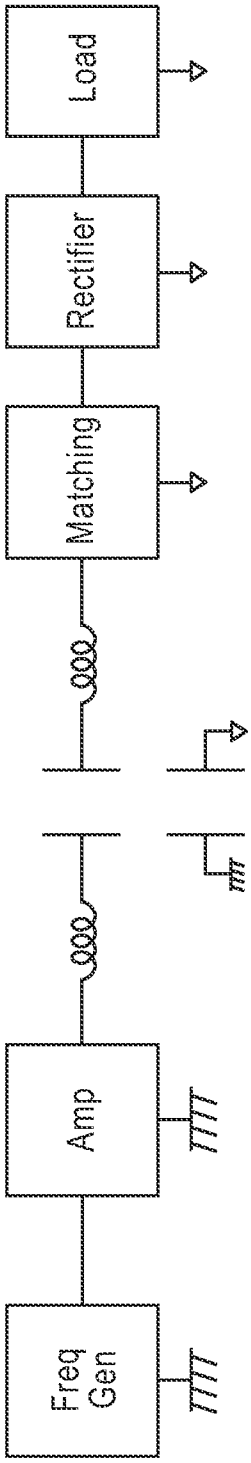
Load
Rectifier
Matching
Amp
Freq Gen

Fig.7

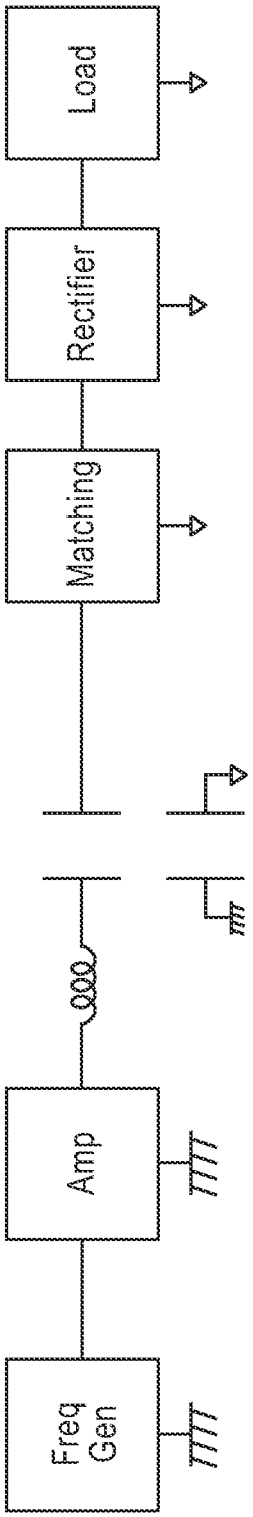
Load
Rectifier
Matching
Amp
Freq Gen

Fig.8

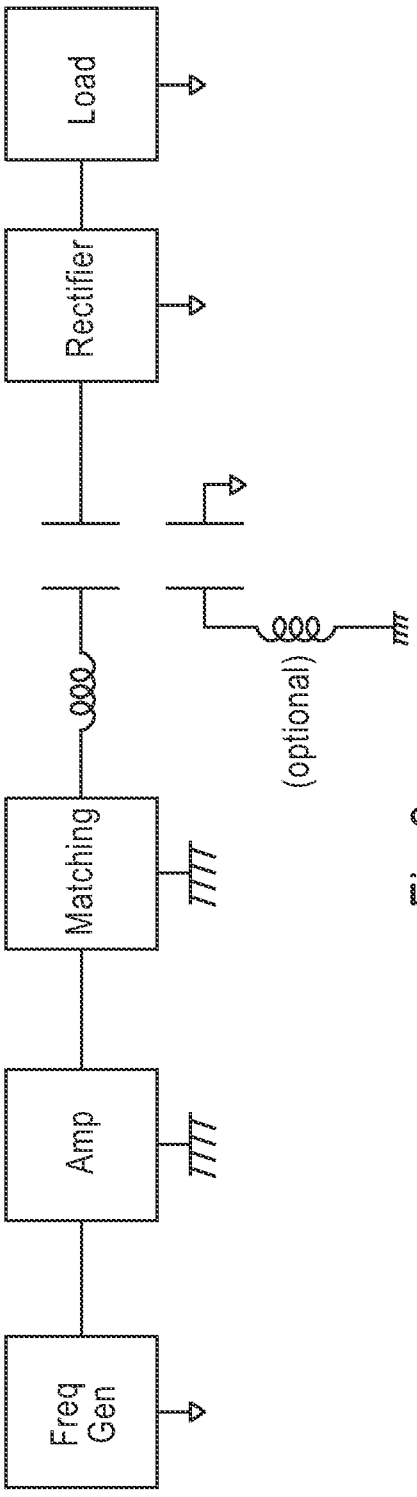
Freq Gen
Amp
Matching
Rectifier
Load
(optional)

Fig.9

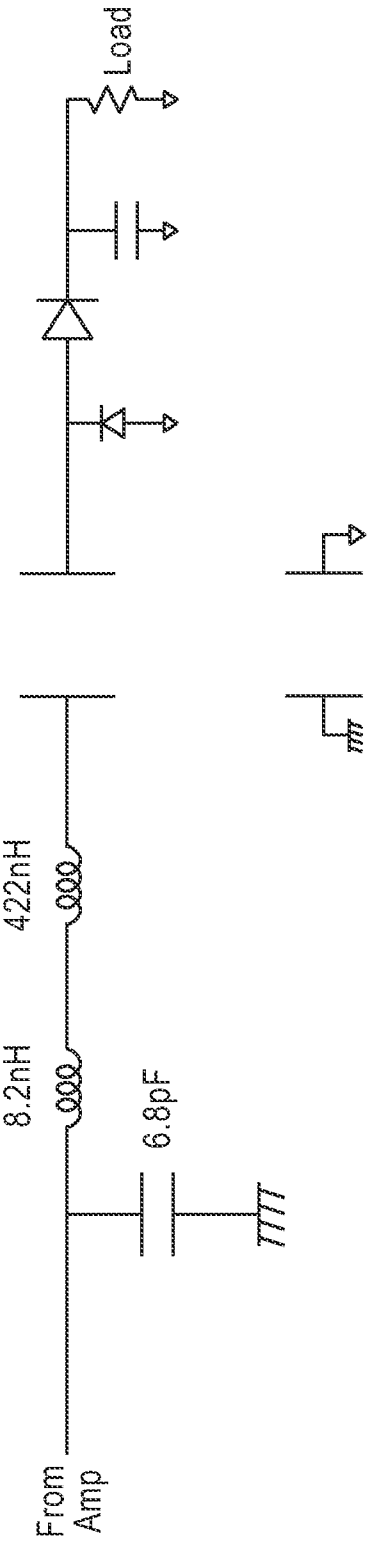
From Amp
8.2nH
422nH
6.8pF
Load

Fig.10

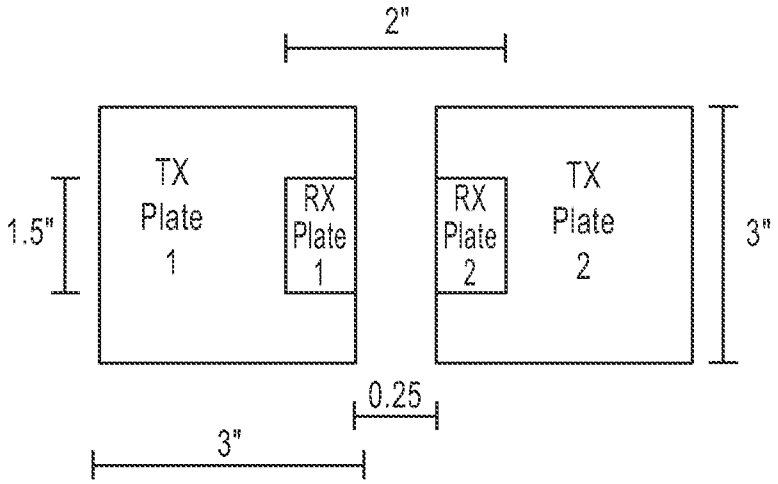

Fig.11A

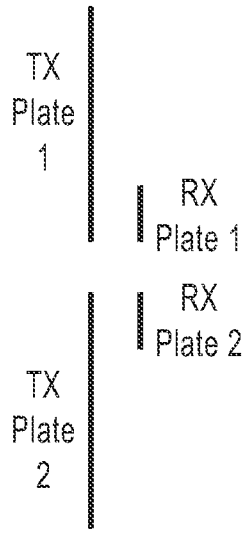

Fig.11C

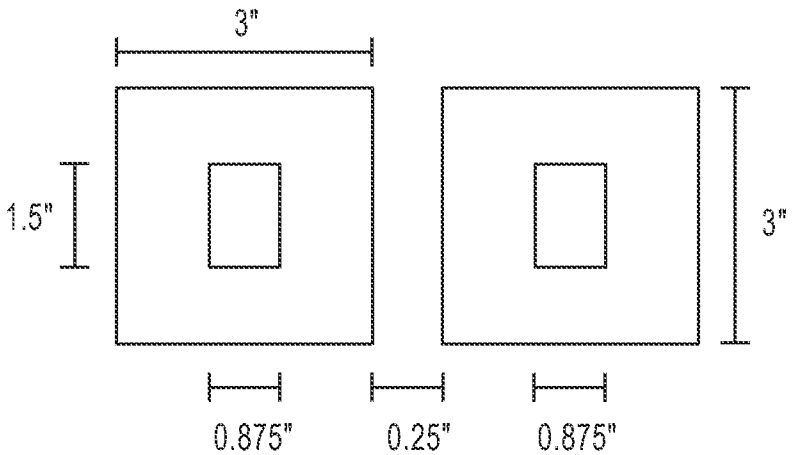

Fig.11B

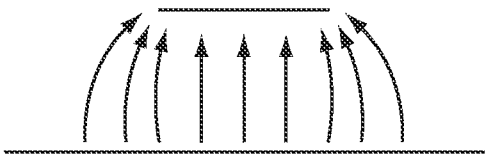

Fig.12A

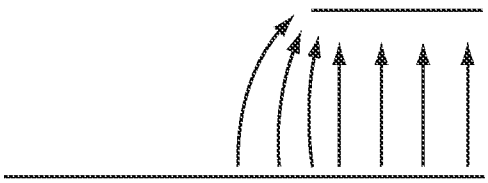

Fig.12B

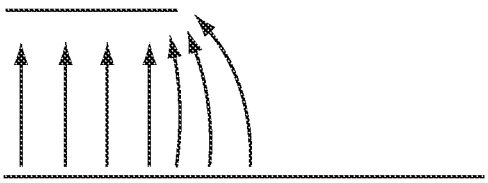

Fig.12C

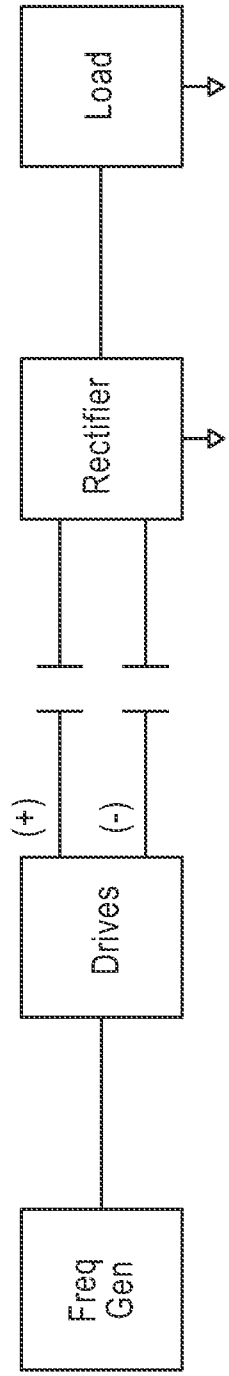

Fig.13

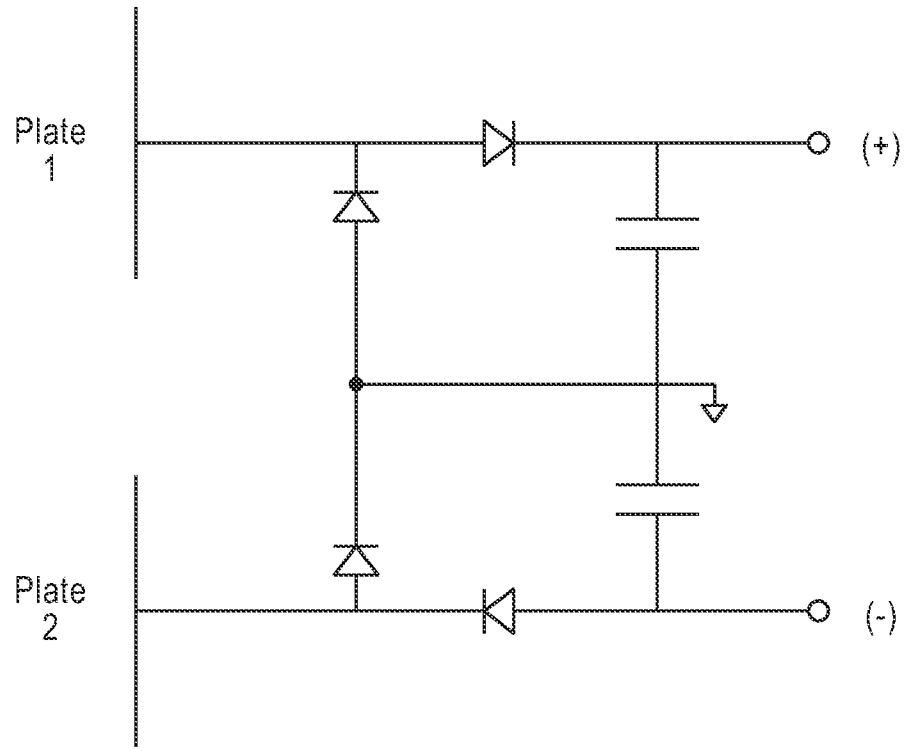

Fig.14

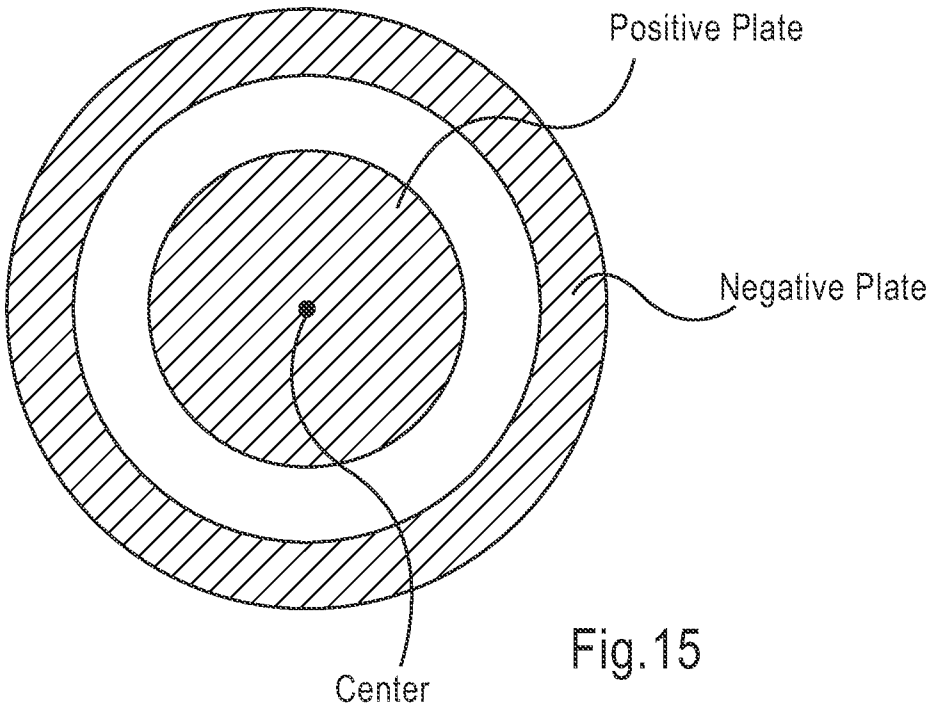

Fig.15

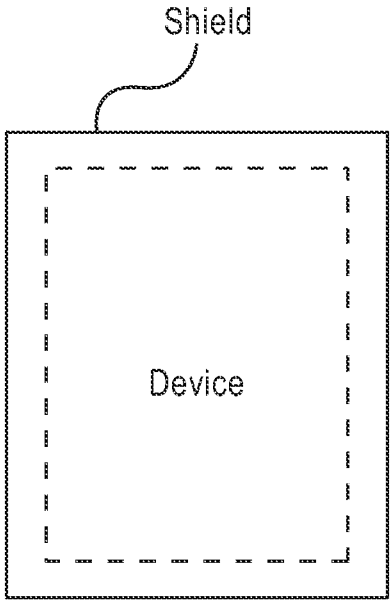

Fig.16A

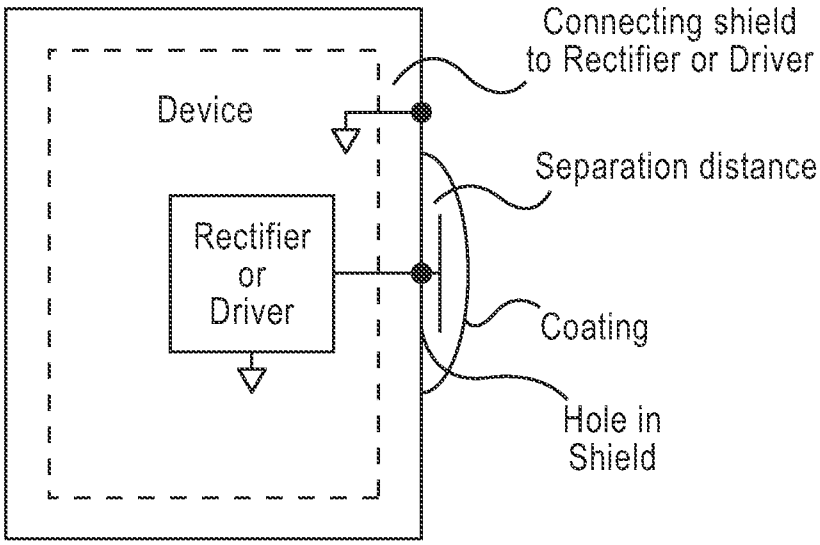

Fig.16B

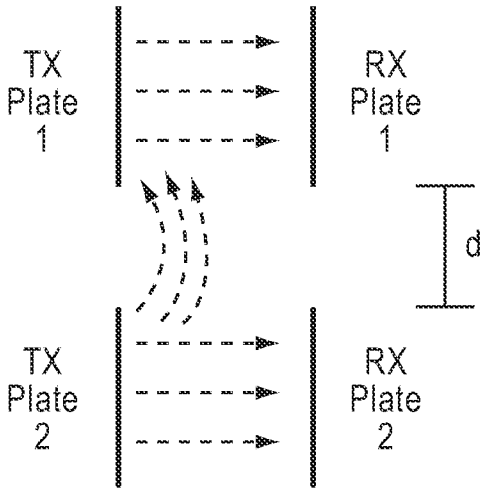

Fig.17

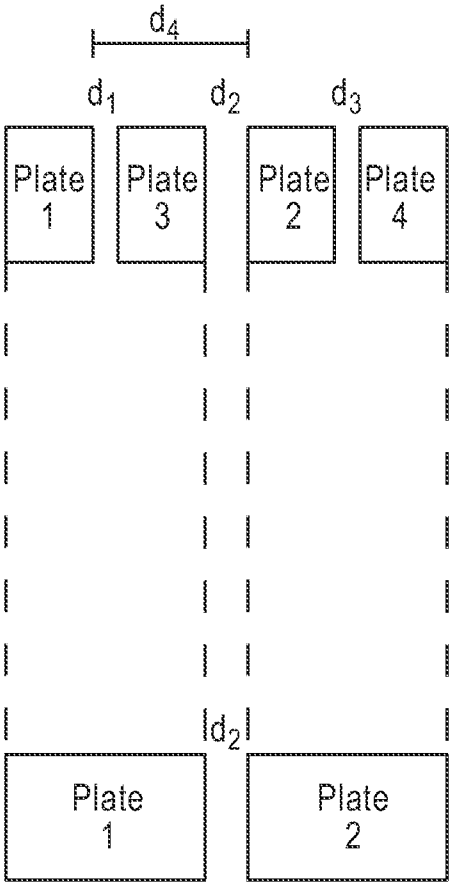

Fig.18A

Fig.18B



Fig.18C

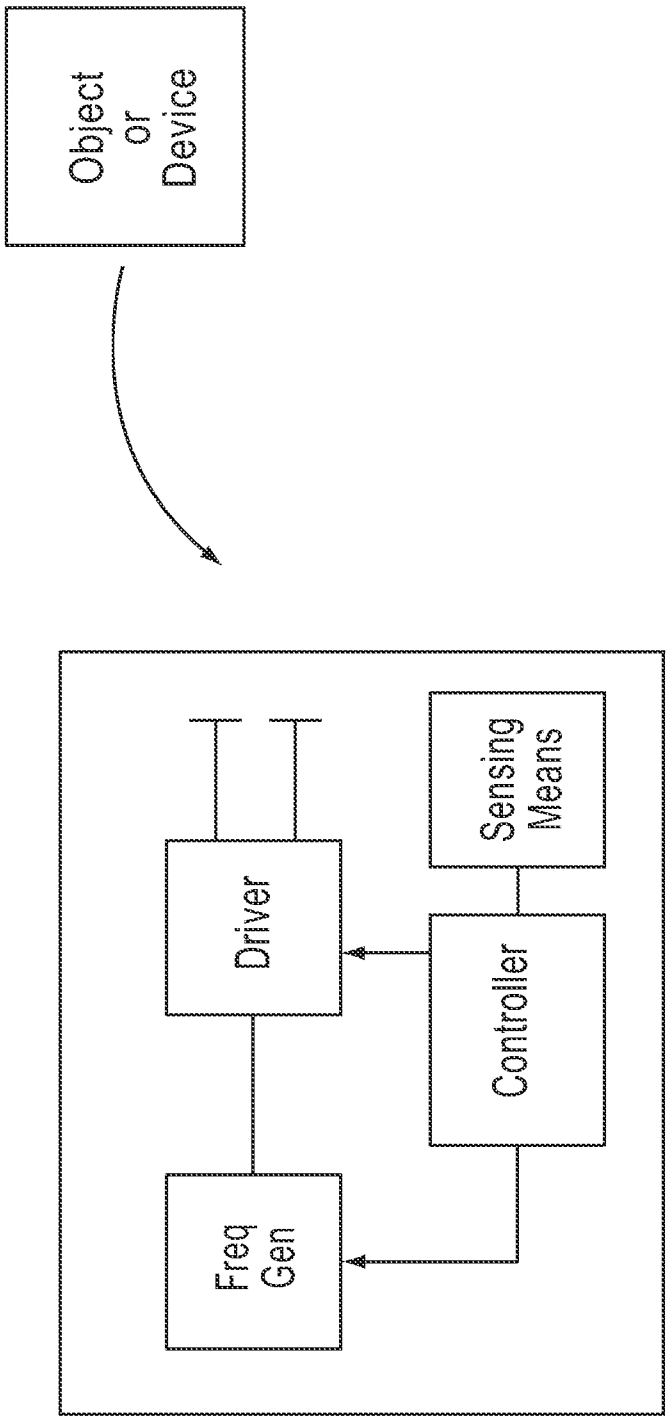

Fig.19

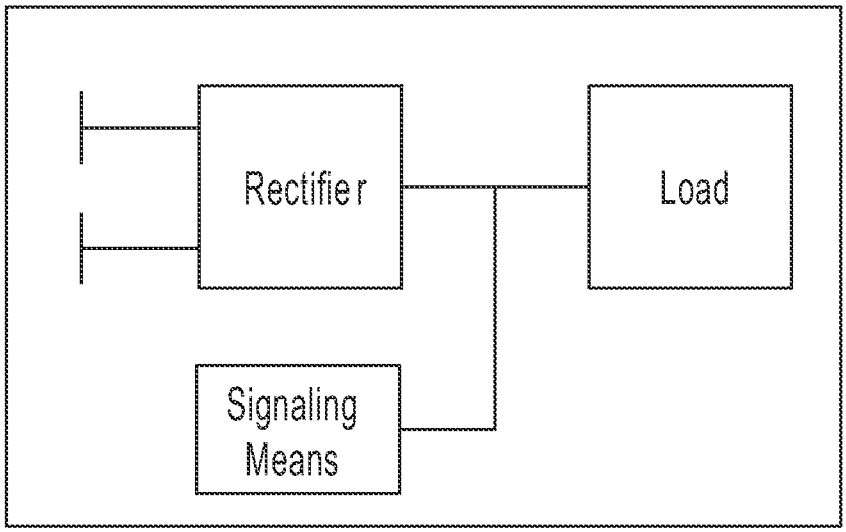

Fig.20

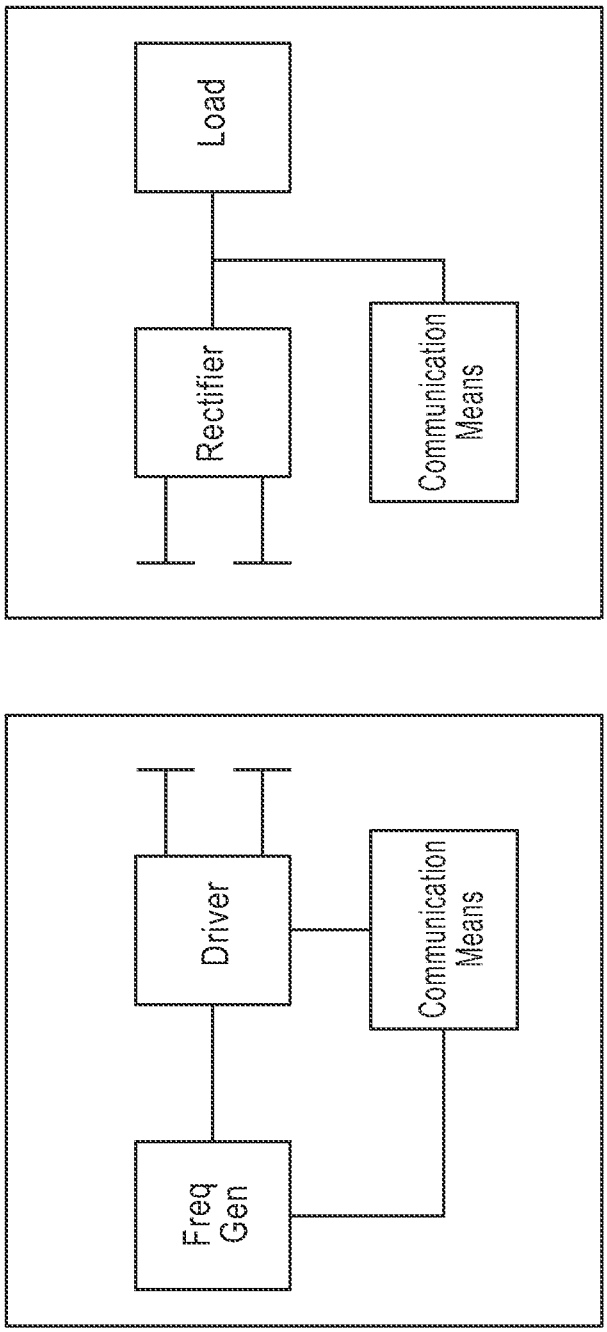
Load
Rectifier
Communication Means
Driver
Communication Means
Freq Gen

Fig.21

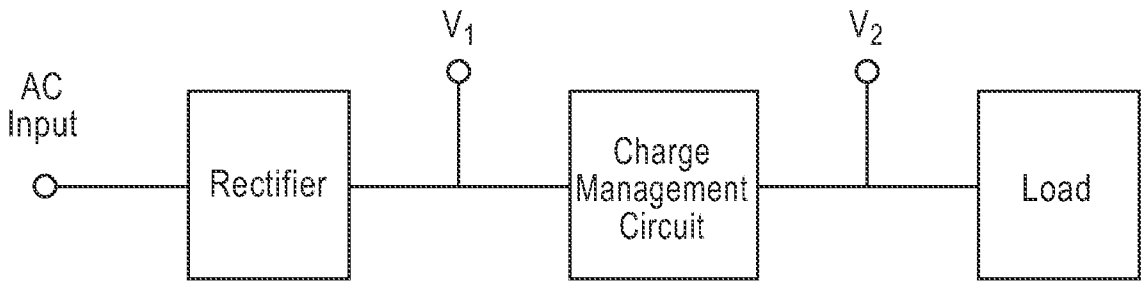
AC
Input
Rectifier
V1
Charge
Management
Circuit
V2
Load

Fig.22

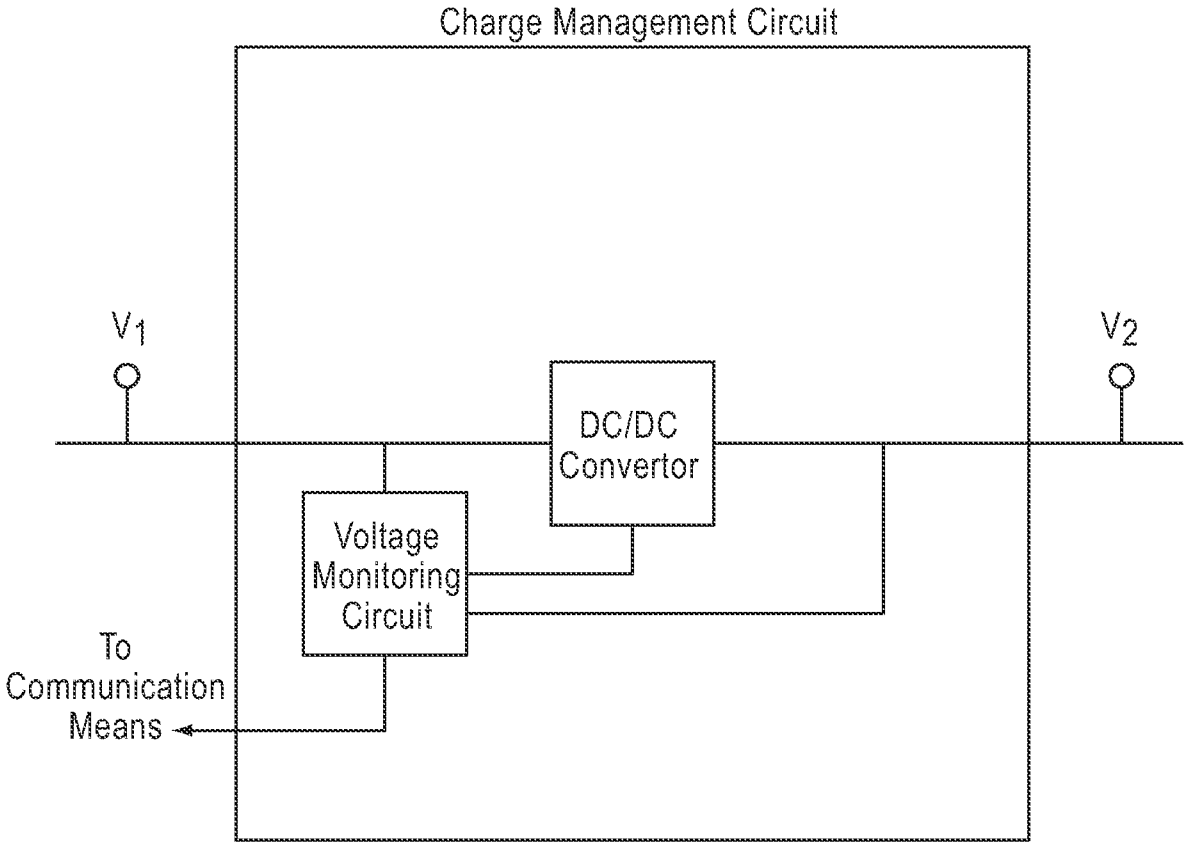
Charge Management Circuit
V1
V2
DC/DC
Convertor
Voltage
Monitoring
Circuit
To
Communication
Means

Fig.23

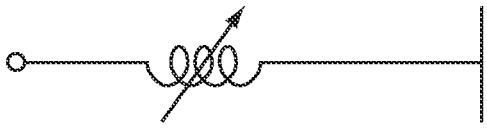

Fig.24A

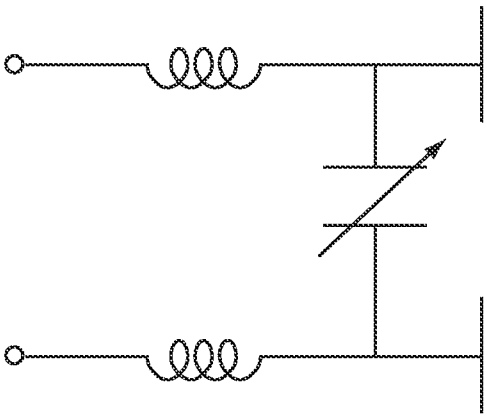

Fig.24B

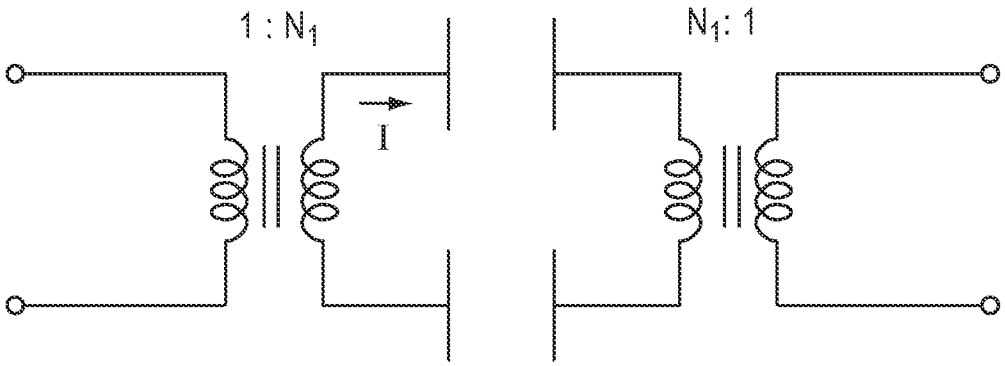

Fig.25

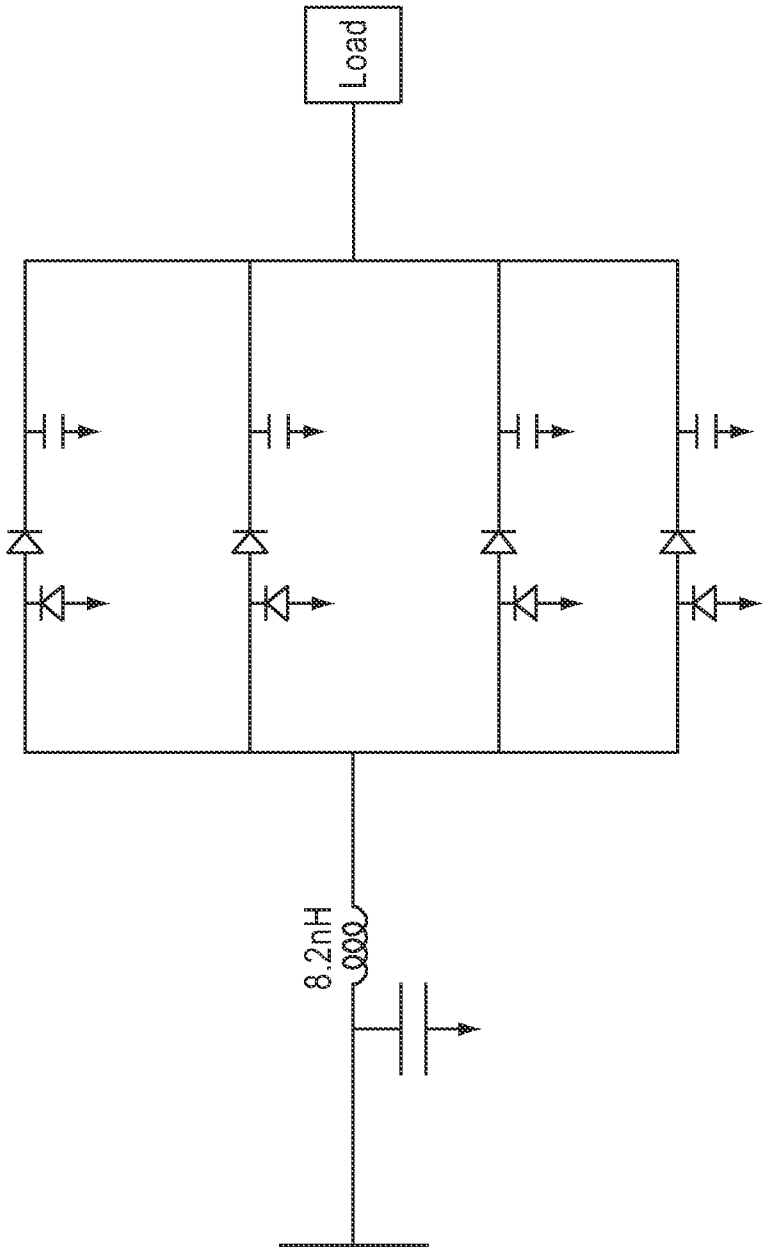

Fig.26

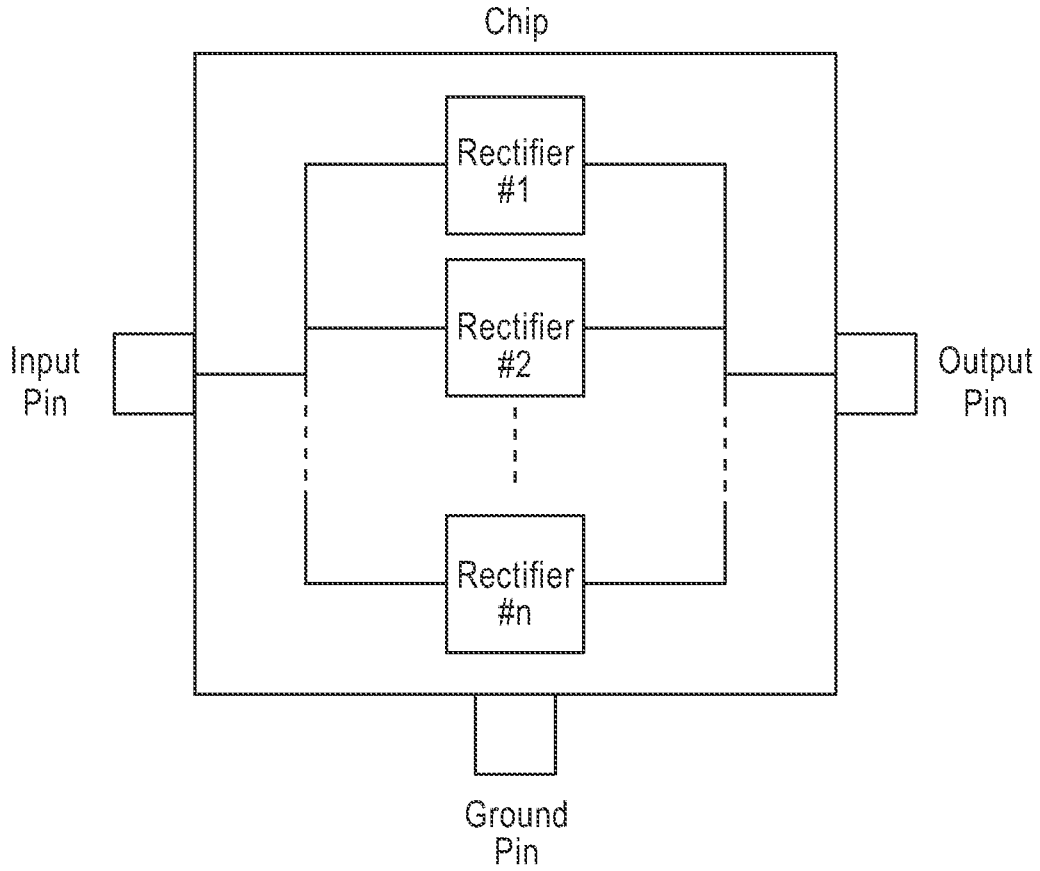

Fig.27A

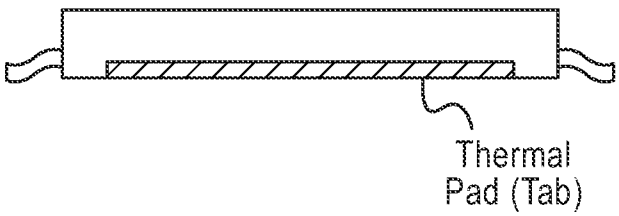

Fig.27B

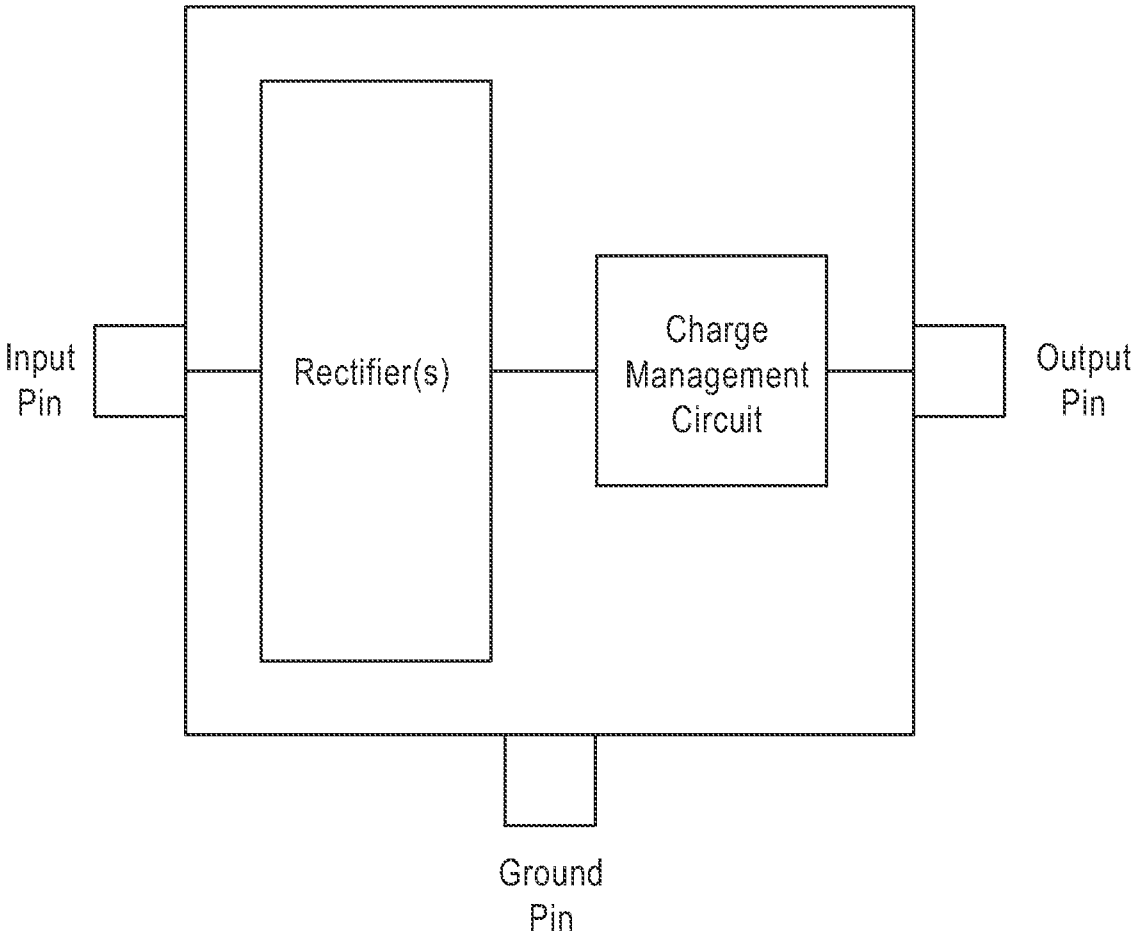
Input Pin
Rectifier(s)
Charge Management Circuit
Output Pin
Ground Pin

Fig.28

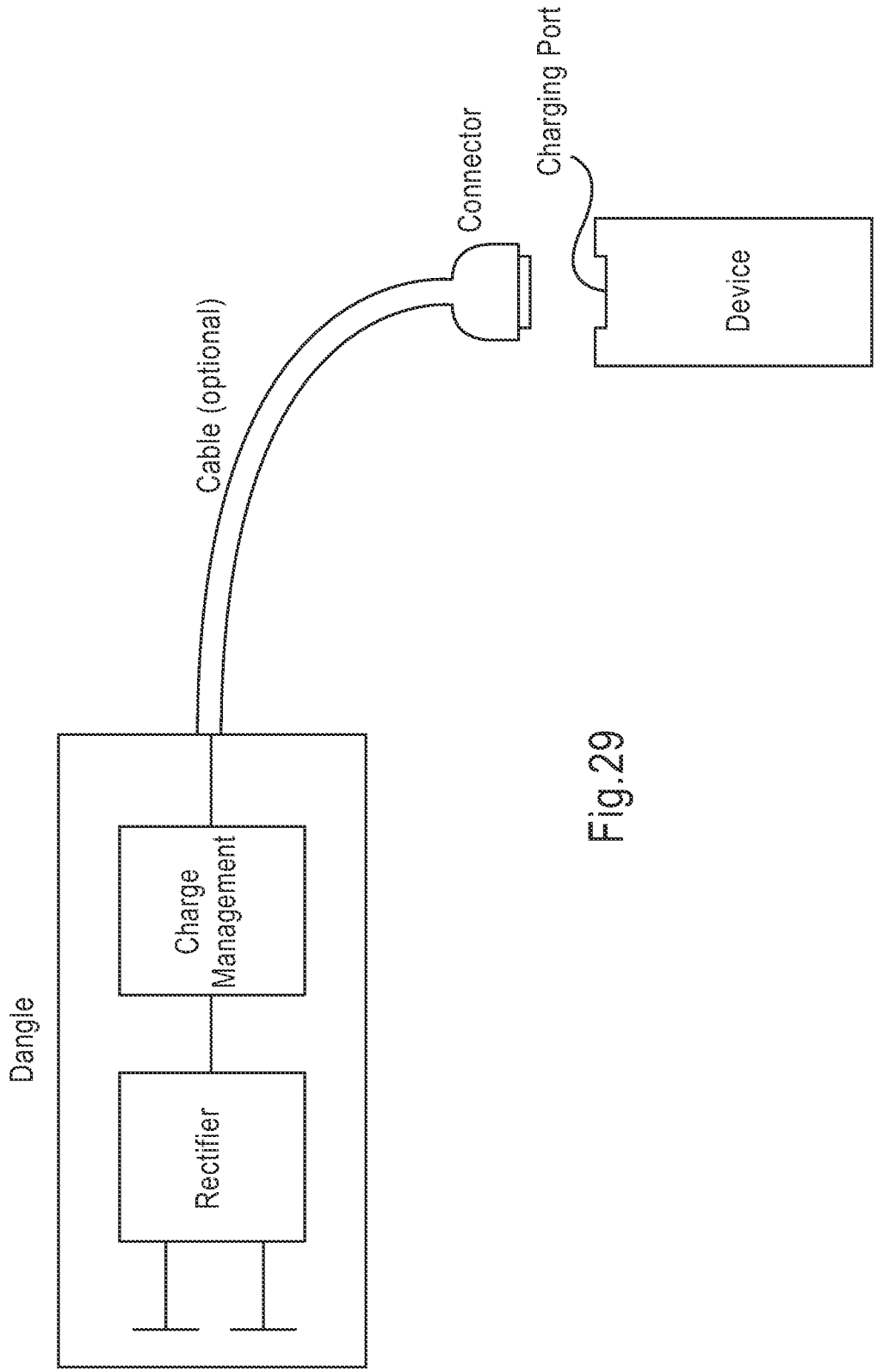
Dangle
Charge Management
Rectifier
Cable (optional)
Connector
Charging Port
Device

Fig.29

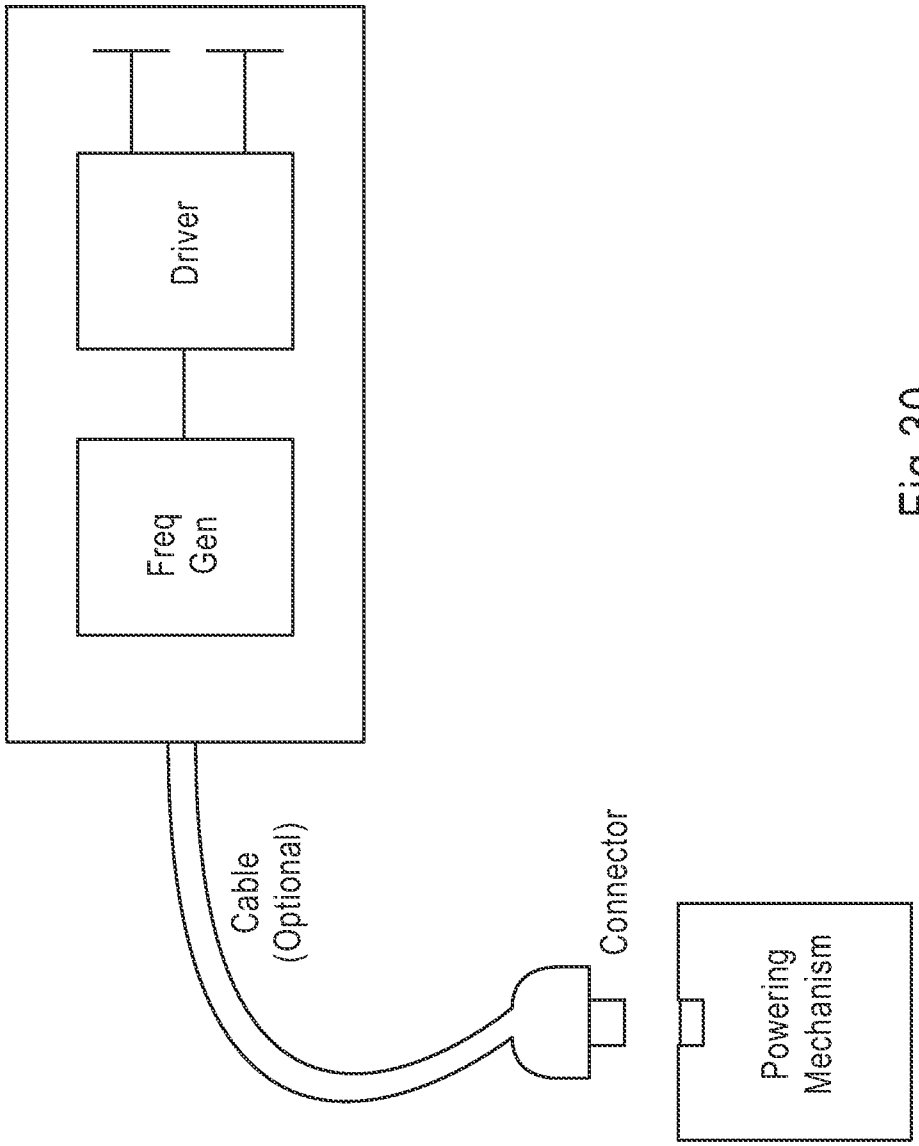
Driver
Freq Gen
Cable (Optional)
Connector
Powering Mechanism

Fig.30

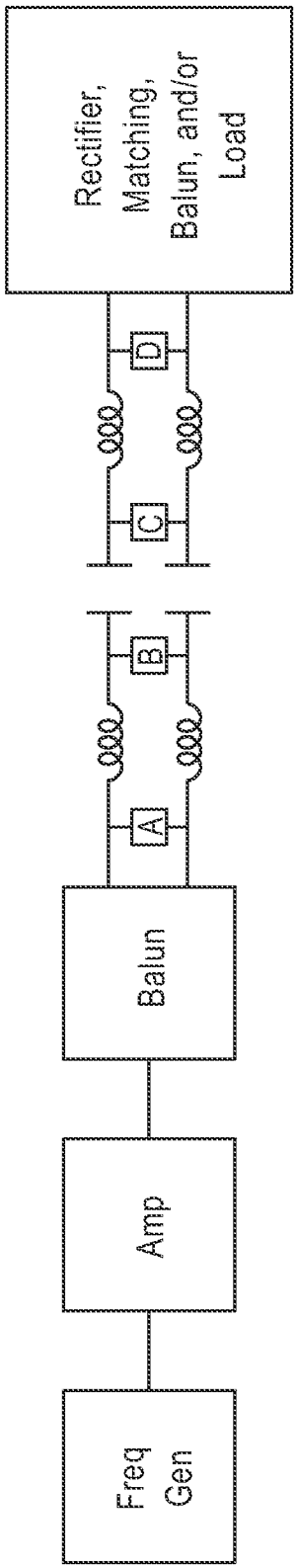
Freq Gen
Amp
Balun
A
B
C
D
Rectifier, Matching, Balun, and/or Load

Fig.31

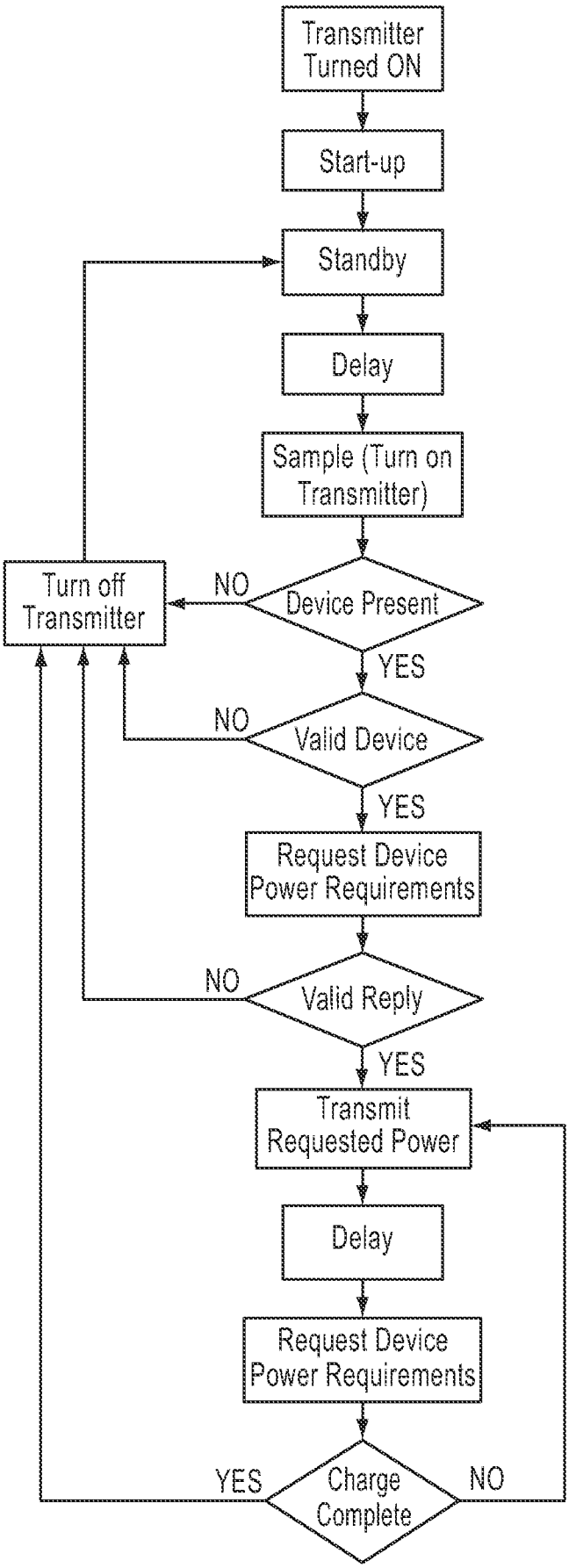
Transmitter Turned ON
Start-up
Standby
Delay
Sample (Turn on Transmitter)
Device Present
NO
Turn off Transmitter
YES
Valid Device
NO
YES
Request Device Power Requirements
Valid Reply
NO
YES
Transmit Requested Power
Delay
Request Device Power Requirements
Charge Complete
YES
NO

Fig.32

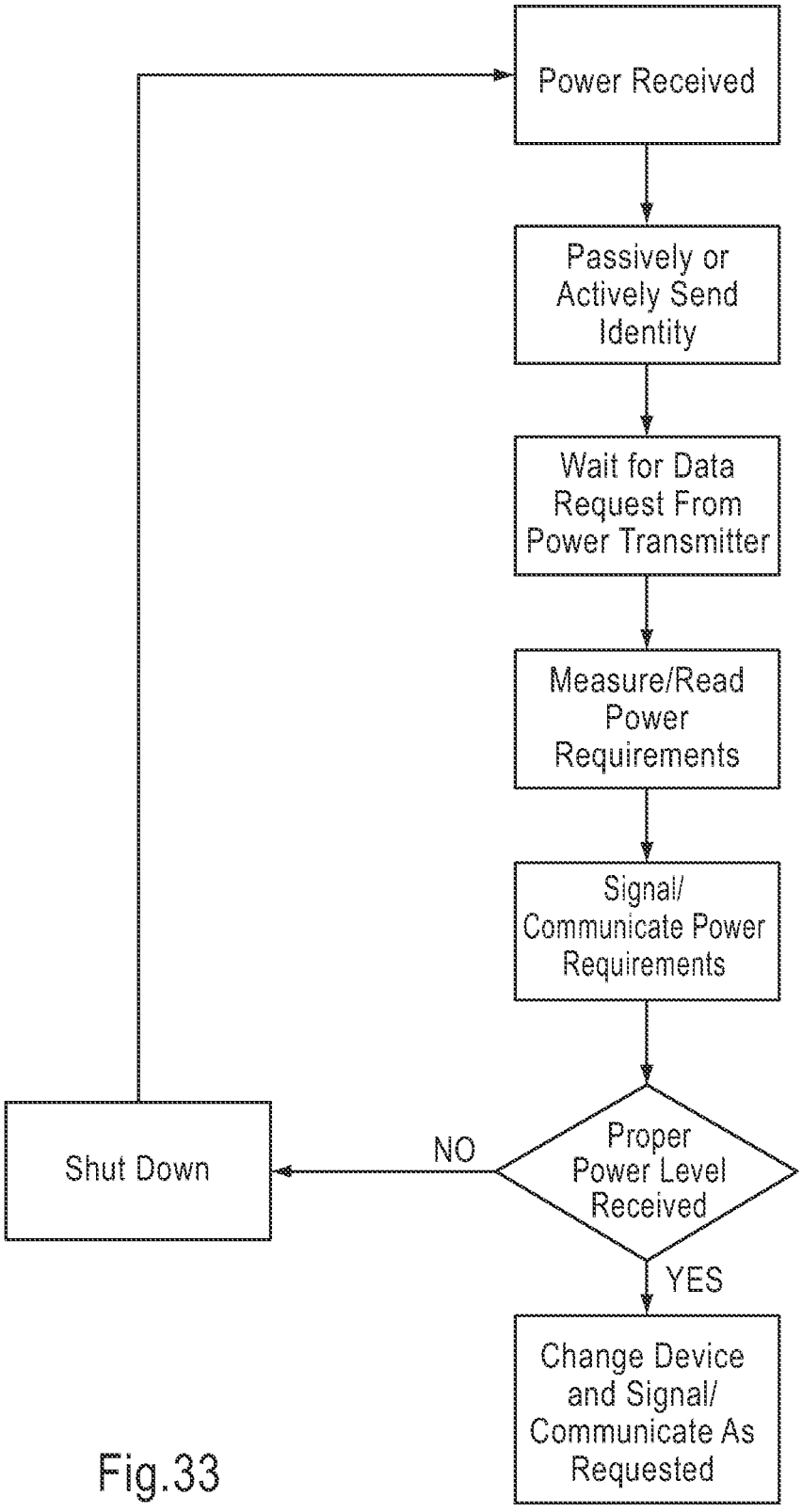
Power Received
Passively or Actively Send Identity
Wait for Data Request From Power Transmitter
Measure/Read Power Requirements
Signal/ Communicate Power Requirements
Proper Power Level Received
NO
Shut Down
YES
Change Device and Signal/ Communicate As Requested

Fig.33

INTERNATIONAL SEARCH REPORT

International application No.
PCT/US 09/30098

A. CLASSIFICATION OF SUBJECT MATTER
IPC(8) - H01F 27/42, 37/00, 38/00 (2009.01)
USPC - 307/104
According to International Patent Classification (IPC) or to both national classification and IPC

B. FIELDS SEARCHED

Minimum documentation searched (classification system followed by classification symbols)
IPC(8): H01F 27/42,37/00,38/00 (2009.01)
USPC: 307/104

Documentation searched other than minimum documentation to the extent that such documents are included in the fields searched
IPC(8): H01F 27/42,37/00,38/00 (2009.01) (text search)
USPC: 307/104; 336/200; 340/825.71,825.72; 455/572, 127.1,343.1 (text search)

Electronic data base consulted during the international search (name of data base and, where practicable, search terms used)
PubWEST(USPT,PGPB,EPAB,JPAB); Internet search via Google Web and Google Scholar search engines. Search Terms Used: impedance matching plate antenna balanced unbalanced balun amplifier frequency FR electrode ground transmitter transceiver transmit induction inductive diode rectifier glass window automotive mobile Zener frequen

C. DOCUMENTS CONSIDERED TO BE RELEVANT

Category*	Citation of document, with indication, where appropriate, of the relevant passages	Relevant to claim No.
X	US 5,557,290 A (Watanabe) 17 September 1996 (17.09.1996) col. 1 ln. 10 to col. 18 ln. 48, Fig. 1-33	1-27
A	US 5,929,718 A (Crosby) 27 July 1999 (27.07.1999)	1-27
A	US 6,538,610 B2 (Noro et al.) 25 March 2003 (25.03.2003)	1-27

☐ Further documents are listed in the continuation of Box C. ☐

* Special categories of cited documents:
"A" document defining the general state of the art which is not considered to be of particular relevance
"E" earlier application or patent but published on or after the international filing date
"L" document which may throw doubts on priority claim(s) or which is cited to establish the publication date of another citation or other special reason (as specified)
"O" document referring to an oral disclosure, use, exhibition or other means
"P" document published prior to the international filing date but later than the priority date claimed
"T" later document published after the international filing date or priority date and not in conflict with the application but cited to understand the principle or theory underlying the invention
"X" document of particular relevance; the claimed invention cannot be considered novel or cannot be considered to involve an inventive step when the document is taken alone
"Y" document of particular relevance; the claimed invention cannot be considered to involve an inventive step when the document is combined with one or more other such documents, such combination being obvious to a person skilled in the art
"&" document member of the same patent family

Date of the actual completion of the international search	Date of mailing of the international search report
20 March 2009 (20.03.2009)	30 MAR 2009
Name and mailing address of the ISA/US Mail Stop PCT, Attn: ISA/US, Commissioner for Patents P.O. Box 1450, Alexandria, Virginia 22313-1450 Facsimile No. 571-273-3201	Authorized officer: Lee W. Young PCT Helpdesk: 571-272-4300 PCT OSP: 571-272-7774

Form PCT/ISA/210 (second sheet) (April 2007)