W. REID.

CARBURETER.

APPLICATION FILED SEPT. 2, 1919.

1,394,687. Patented Oct. 25, 1921.

Fig. 1

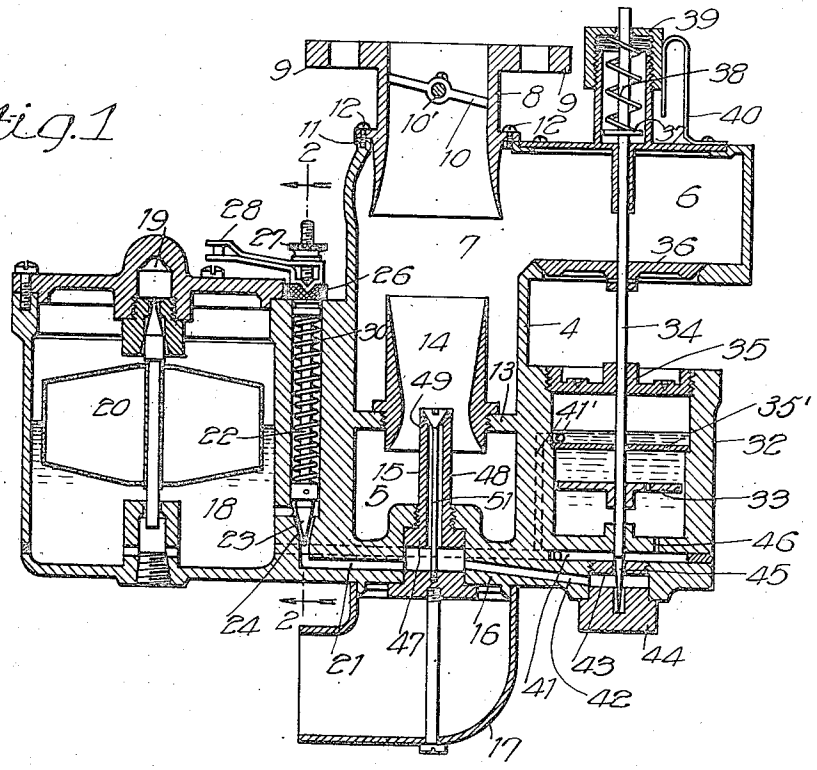

Fig. 2

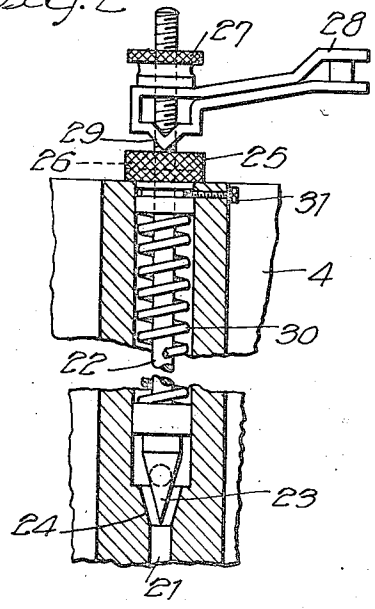

Fig. 3

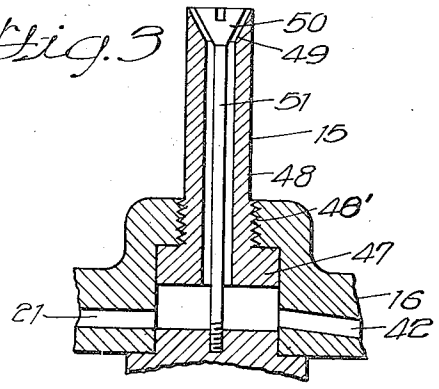

Inventor
William Reid
William Bradbury & Sons
Attys.

UNITED STATES PATENT OFFICE.

WILLIAM REID, OF CHICAGO, ILLINOIS.

CARBURETER.

1,394,687. Specification of Letters Patent. Patented Oct. 25, 1921.

Application filed September 2, 1919. Serial No. 321,137.

To all whom it may concern:

Be it known that I, WILLIAM REID, a citizen of the United States, residing at Chicago, in the county of Cook and State of Illinois, have invented a certain new and useful Improvement in Carbureters, of which the following is a full, clear, concise, and exact description, reference being had to the accompanying drawings, forming a part of this specification.

My invention relates to carbureters for internal combustion engines, and has for its general object the provision of means for securing the proper proportion of fuel and air in the combustible mixture under all engine operating conditions.

In accomplishing this result I provide two independently operating valve structures between the fuel supply chamber and the nozzle, one of the valves being manually operated and adjusted for idling and the other automatically operated in accordance with engine requirements. The two valves are so arranged and operated that they act entirely independently of one another, so that the complete closure of one valve has no effect on the other. This arrangement differentiates from the prior constructions, wherein one of the valves is located at the ejector port of the nozzle, and therefore is dependent for its regulating actions on a second valve controlling the passage of fuel to the nozzle.

In the present invention the regulation of the fuel takes place at a point anterior to the nozzle, and in two separate fuel supply ducts, neither one of which is in any way affected by what takes place in the other duct. A further advantage secured in this arrangement resides in the provision of a mixing chamber and air passageways which are entirely devoid of metering pins and operating link mechanism, which offer a greater or less resistance to the air passing through the carbureter and often produce undesirable eddy currents.

These and other novel arrangements and combinations of the present invention will be pointed out in connection with the accompanying drawings, wherein—

Figure 1 is a vertical cross sectional view of a carbureter constructed in accordance with the present invention;

Fig. 2 is an enlarged cross sectional view taken along the line 2—2 of Fig. 1, looking in the direction indicated by the arrows; and

Fig. 3 is an enlarged cross sectional view of the improved nozzle of my invention.

Similar characters of reference refer to similar parts throughout the several views.

Referring first to Fig. 1, 4 designates a casing conformed to provide a primary air intake passageway 5 and a secondary air intake passageway 6, both passageways communicating with the mixing chamber shown at 7. The upper end of the casing 4 is provided with an opening, into which extends a throttle casing 8 carrying the usual flanges 9, 9 for attaching the carbureter to an internal combustion engine. The casing 8 carries the usual form of throttle valve 10 pivoted at 10′ to the casing. Extending outwardly from the casing 8 is an annular flange 11 arranged to coöperate with a plurality of screws shown at 12, 12 for attaching the casing 8 to the carbureter casing 4. The construction just referred to makes it possible to turn the casing 8 in any position with reference to the carbureter casing 4, so that the carbureter may be applied to any type of engine, it being desirable in certain forms of engines that the throttle shaft 10 have a certain relation with the intake manifold of the engine.

The lower flaring and knife edge to the part 8 provides means for requiring the air which enters the carbureter through the secondary air valve in part to circulate around the entrance to the member 8, and thus to become more nearly equally distributed across the passageway which aids in securing a homogeneous mixture. The sharpened edge of the member 8 causes such particles of fuel as may collect to be picked off in atomized form, rather than in the form of large drops, as would be the case if the lower edges of the part 8 were not sharpened.

Disposed in the intake passageway 5 of the carbureter casing is an annular shoulder 13 supporting a Venturi tube 14, into which extends a fuel nozzle 15, in turn carried by a spider 16 extending across the primary air intake passageway. If desired, the lower end of the primary air intake passageway may communicate with an elbow 17 arranged for attachment with a hot air conduit.

Disposed adjacent the fuel nozzle 15 and preferably forming part of the main carbureter casing 4 is a fuel chamber 18 pro-

vided with a fuel intake port 19 and float mechanism 20 for controlling the level of fuel in the fuel chamber. The lower end of the fuel chamber has communication with the lower end of the nozzle by way of the fuel supply duct shown at 21. Extending vertically through the fuel chamber 18 is a valve or metering pin 22, which has its valve portion 23 coöperating with a seat 24 forming part of the fuel duct 21. The upper end of the metering pin 22 extends through a bushing 25 provided with a V-shaped notch 26. The upper end of the metering pin is screwthreaded as shown, to receive a nut 27, between which and the bushing 25 is interposed an operating lever 28 carrying a V-shaped cam 29, arranged for cooperation with the notch 26 of the bushing. A spring 30 is employed between the bushing and the lower end of the metering pin for the purpose of maintaining the bushing, operating lever, and nuts 25, 28 and 27 respectively in engagement, as shown in the drawings. The bushing 25 is held against rotative movement by a set screw 31 extending through the casing, as most clearly shown in Fig. 2.

From the description thus far given it will be observed that the metering pin may be moved toward and away from its seat by manipulating or rotating the operating lever 28, the cam action existing between the V-shaped notch and the cam 29 serving to raise and lower the pin. In Fig. 1, I have shown the metering pin in its lowermost position with the cam 29 engaging in the V-shaped notch. In Fig. 2 the operating lever is shown rotated ninety degrees from the position shown in Fig. 1, with the cam portion of the operating lever riding on top of the bushing and out of the V-shaped notch. The operating lever may be moved to assume any position with respect to the carbureter casing by unscrewing the set screw 31, rotating the bushing 25 to the desired position, and then resetting the screw. This makes it possible to move the operating lever 28 to that position which is most desirable for control from the instrument board of the vehicle.

Forming a part of the carbureter casing 4 and preferably located diametrically opposite the float chamber 18 is a dashpot 32 coöperating with a piston of disk 33 mounted on a rod 34 extending vertically through the dashopt cover 35. 36 designates an automatically operated air intake valve for the auxiliary air intake passageway 6. This valve is pinned or otherwise fixed to the rod 34 and is steadied in its operation by the dashpot arrangement referred to. To steady the operation of the dashpot and to prevent the passage of fuel through the cover 35, I employ the plate 35′ which is fixed to the dash pot wall and has the rod 34 extending loosely therethrough. The upper end of the rod 34 extends upwardly through the casing of the carbureter and carries a shoulder 37 adapted for engagement by a spring 38, the upper end of which engages a nut 39 provided on its outer cylindrical surface with a plurality of grooves arranged for coöperation with a spring lock 40. By manipulating the nut 39 any desired spring tension may be placed on the valve 36.

Extending and affording communication between the lower end of the fuel chamber 18 and the lower end of the dashpot 32 is a fuel feed duct 41 having communication with a second fuel feed duct 42 through the opening 43 provided in the plug 44. The inner end of the duct 42 communicates with the lower end of the fuel nozzle, as most clearly shown in Figs. 1 and 3. The passage of fuel through the opening 43 in the plug 44 is regulated by the valve or metering pin 45 formed on the lower end of the rod 34, the valve 45 being moved toward and away from the opening 43 in accordance with the operation of the auxiliary air inlet valve 36. The interior of the dashpot 32 has communication with the duct 41 through the restricted opening 46.

The duct 41′ communicating between the upper end of the dash pot and the duct 41 may, if desired, be employed for maintaining a constant fuel level in the dash pot.

In the operation of the carbureter the metering pin 22 is set for idling and serves to permit the proper feed of fuel from the fuel chamber to the nozzle under idling and closed throttle conditions. When, however, the throttle 10 is opened, the auxiliary air intake valve 36 is automatically opened by the reduction of pressure produced in the mixing chamber of the carbureter and the valve or metering pin 45 is withdrawn a corresponding amount from the opening 43, with the result that the proper proportion of fuel is fed through the ducts 41, 42 and 43 to the fuel nozzle.

It will be observed that the two valves 23 and 45 are entirely independent of one another, and that they operate entirely independently of each other. For example, if the valve 23 is moved to its closed position, it will have no effect whatsoever on the passage of fuel through the ducts 41 and 42, and vice versa. Attention is also directed to the fact that the mixing chamber, as well as the primary air intake passage 5 and the secondary air intake passageway 6, is devoid of all metering pins and link mechanism which in some forms of carbureters extend from the secondary air inlet valve to the discharge end of the fuel nozzle.

The detailed construction of the nozzle 15 is most clearly shown in Fig. 3, and comprises a body portion 47 and a tubular portion 48 threaded at 48′ for coöperation with

the spider 16. The upper end of the tubular portion 48 is outwardly flared at 49 and coöperates with the conical head 50 of the screw 51, to provide an outwardly diverging annular ejector port. The fuel enters the port of the nozzle through a transverse passage drilled through the bulky lower part of the nozzle, one end of this transverse passage communicating with the fuel passage controlled by the needle valve 45, while the other end of the transverse passage communicates with the passage controlled by hand-operated needle valve 23. The primary air induction tube 17 is held in place by a screw entering the enlarged head of the nozzle 47. The screw 51 may be held in place at the base of the nozzle as shown.

Having thus described my invention, what I claim as new and desire to secure by Letters Patent is:

1. A carbureter comprising a casing having a mixing chamber, a fuel chamber, a symmetrically located fuel port for supplying fuel to said mixing chamber, said casing being provided with two ducts each of which affords communication between the fuel chamber and fuel port for supplying fuel to the latter, a metering pin for regulating the flow of fuel through one of said ducts to said port, a secondary air inlet valve for said mixing chamber, and a second metering pin controlled by said valve for regulating the passage of fuel through the other of said ducts to said port.

2. In a carbureter the combination of a casing provided with a mixing chamber, an air inlet valve for said chamber, a symmetrically located fuel port, a float chamber arranged to supply fuel to said port, and a pair of independently operating valves for controlling the flow of fuel from the fuel chamber to the port, one of said valves being controlled and operated by said air inlet valve.

3. In a carbureter the combination of a casing having a mixing chamber, a fuel chamber, a symmetrically located fuel port in the mixing chamber, said casing being provided with two fuel ducts extending between the fuel chamber and fuel port, and a valve in each of said ducts, one of said valves being automatically operated by the reduction of pressure produced in the carbureter.

4. In a carbureter for internal combustion engines the combination of a casing, a fuel nozzle therein, a fuel supply reservoir arranged for supplying fuel to said port centrally located at a point of high suction and two valves for regulating the flow of fuel between said reservoir and port, each of said valves operating independently of the other, and pressure operated means connected with one of said valves for automatically operating said valve in accordance with varying pressure reduction in the carbureter.

5. In a carbureter the combination of a casing having a mixing chamber and primary and secondary air intake ports for said mixing chamber, a fuel port in the mixing chamber, a fuel chamber, said casing being provided with two ducts extending between the fuel chamber and fuel port for supplying fuel to the latter, a manually operable valve in one of said ducts, an automatically operated air valve for said secondary air intake port, a dashpot, a disk in said dashpot and connected with said air valve, and a valve operable with said piston and air valve and disposed in the other of said fuel ducts, for automatically regulating fuel feed to the nozzle.

6. In a carbureter the combination of a casing having a mixing chamber and an air intake port, an automatic air valve for said port, a fuel nozzle extending into said mixing chamber, said nozzle being provided with an annular outwardly diverging fuel ejector port, a fuel chamber, said casing being provided with two fuel feed ducts extending between the fuel chamber and said fuel port, a manually operable valve in one of said ducts, and an automatically operated valve connected with the air valve and disposed in the other of said ducts for regulating the flow of fuel therethrough.

7. In a carbureter, the combination with a nozzle of an adjustable fuel passageway extending to said nozzle, a manually operable fuel valve in said passageway, said valve comprising a metering pin, a bushing encircling said pin and having provided therein a V-shaped notch, an operating lever surrounding the shank of the metering pin and having a cam portion entering the notch in said bushing, a spring holding the cam in said notch and tending to close the valve controlled by the metering pin, the rotation of said arm being adapted to force the cam out of the notch and thus open the needle valve against the action of said spring, substantially as described.

In witness whereof I hereunto subscribe my name this 25th day of August, 1919.

WILLIAM REID.

Witnesses:
EDNA V. GUSTAFSON,
ROBERT F. BRACKE.