# Abstract

A Portable, Economical, Efficient System to Minimize Human Efforts for Sugarcane Sowing in Multiple tracks Simultaneously Carrying out Multiple Tasks and method of carrying of sowing Sugarcane and other seeds.

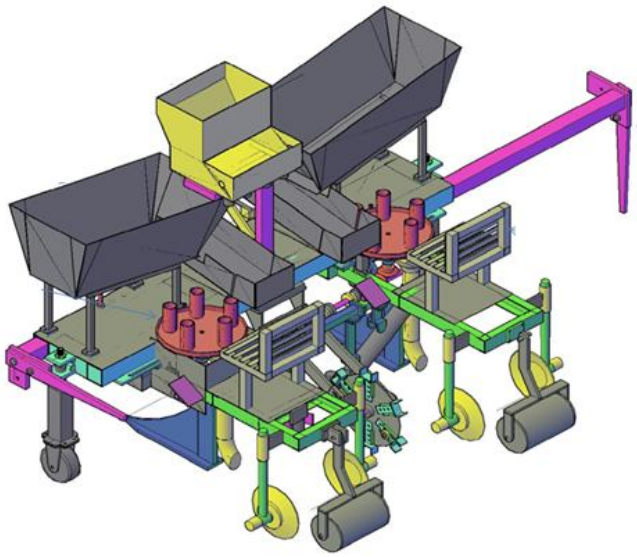

Dated this 31st day of March 2015

Sanjeev D. Kulkarni and Gajanan B. Chivate
BY THEIR ADVOCATES-IP

SHYAM SUNDER IYER
PATENT AGENT
TAS & CO.

TO,
THE CONTROLLER OF PATENTS,
THE PATENT OFFICE, AT MUMBAI