(12) UK Patent (19) GB (11) 2 269 575 (13) B

(54) Title of Invention

Elevator

(51) INT CL[6]; **B66B 7/06**

(21) Application No
9316304.6

(22) Date of filing
05.08.1993

(30) Priority Data

(31) **04211242**

(32) **07.08.1992**

(33) **JP**

(43) Application published
16.02.1994

(45) Patent published
10.04.1996

(72) Inventor(s)
Masayuki Shigeta
Jun Sugawara
Yosinari Atsumi
Minoru Nijima

(73) Proprietor(s)
Hitachi, Ltd.

(Incorporated in Japan)

6 Kanda-Surugadai 4-chome
Chiyoda-ku
Tokyo 101
Japan

(74) Agent and/or
Address for Service
Mewburn Ellis
York House
23 Kingsway
London
WC2B 6HP
United Kingdom

(52) Domestic classification
(Edition O)
B8B BGC
U1S S1872

(56) Documents cited
GB2223471 A
GB1584475 A
GB1440895 A
EP0385255 A1
US5117945 A
US4664229 A
US4230205 A
US3845842 A

(continued on next page)

GB 2 269 575 B - continuation

(58) Field of search

As for published application
2269575 A *viz:*
UK CL(Edition L) **B8B BGC**
INT CL[5] **B66B**
Online databases: WPI
updated as appropriate

Additional Fields
UK CL(Edition N) **B8L LFP**

FIG.1

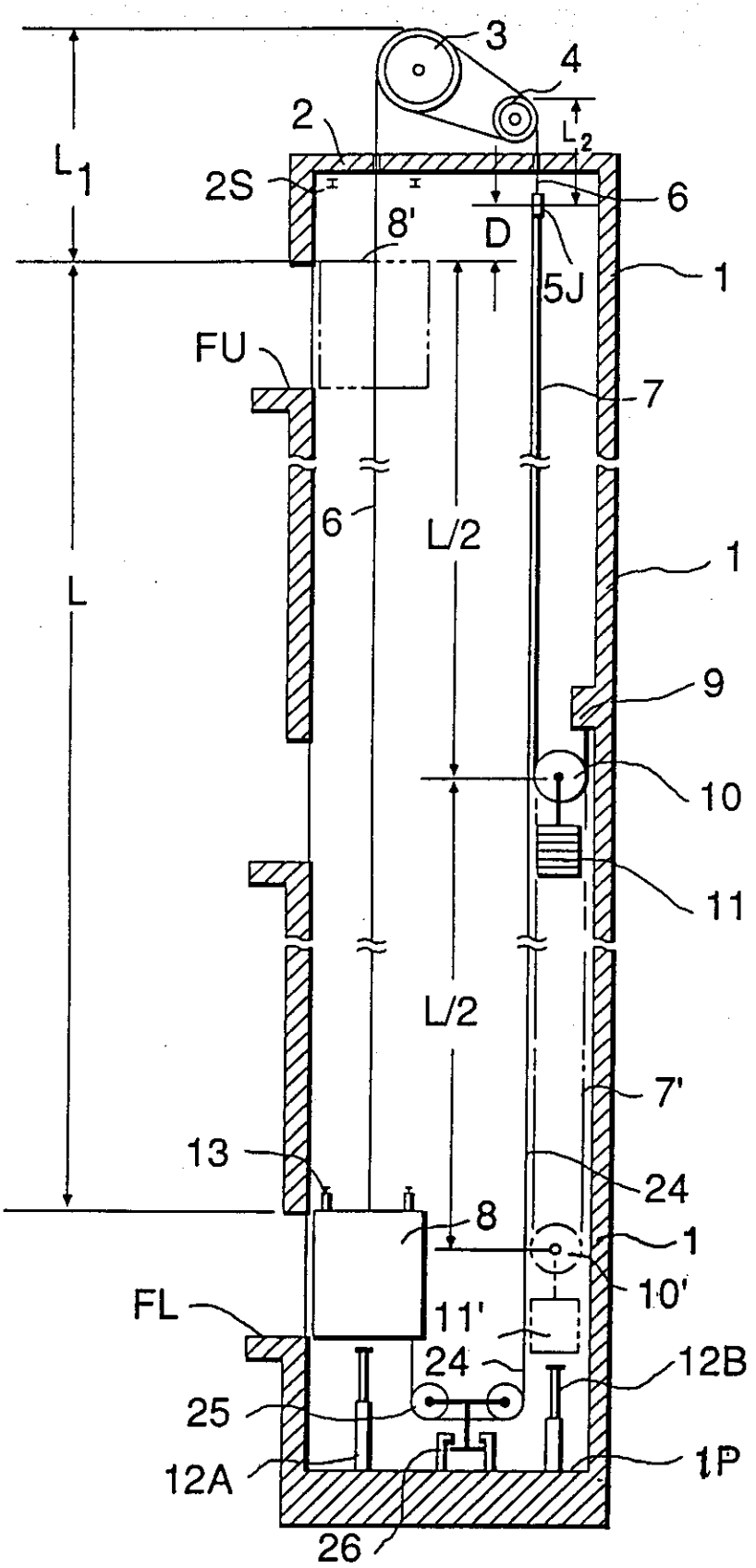
3
4
2
L_2
L_1
2S
6
8'
D
5J
1
FU
7
6
L/2
1
L
9
10
11
L/2
7'
13
24
8
1
10'
FL
11'
24
12B
25
12A
1P
26

FIG.2

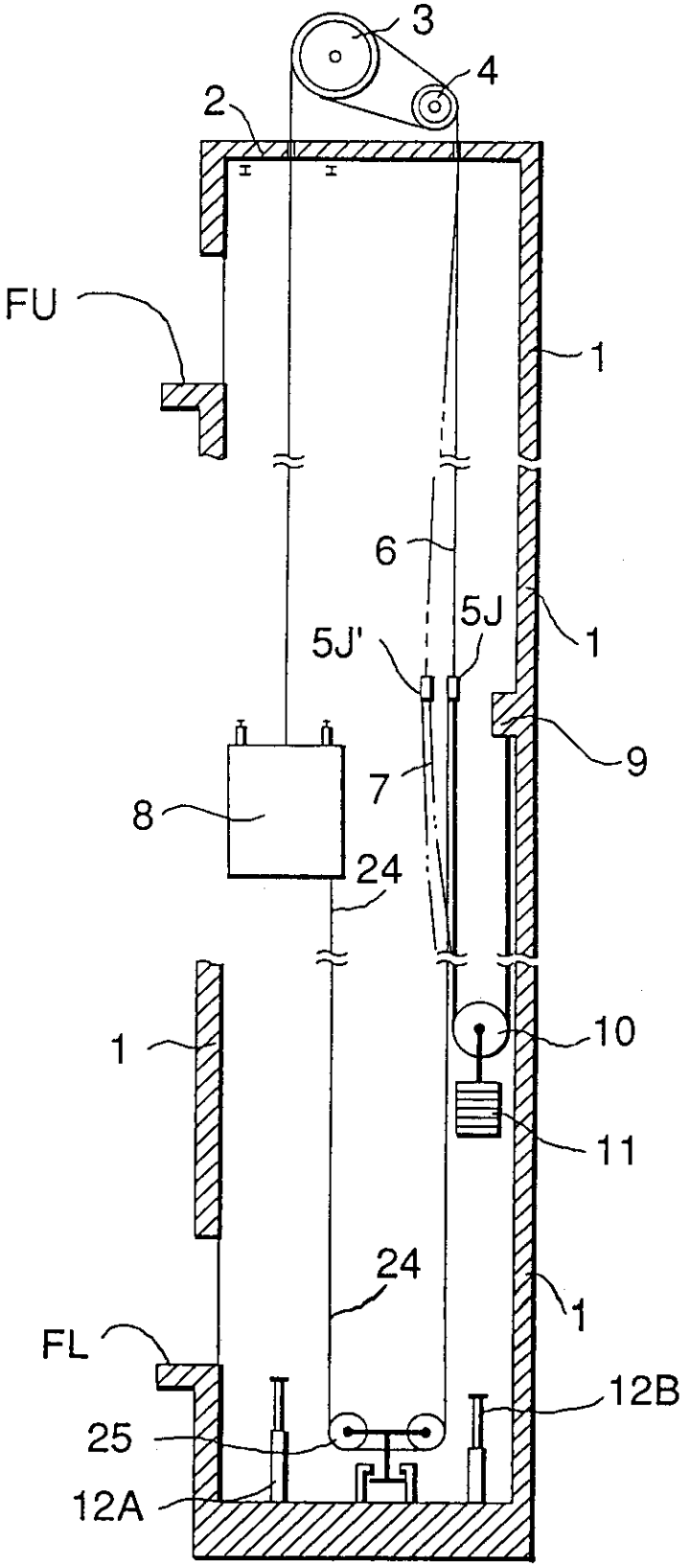

FIG.3A

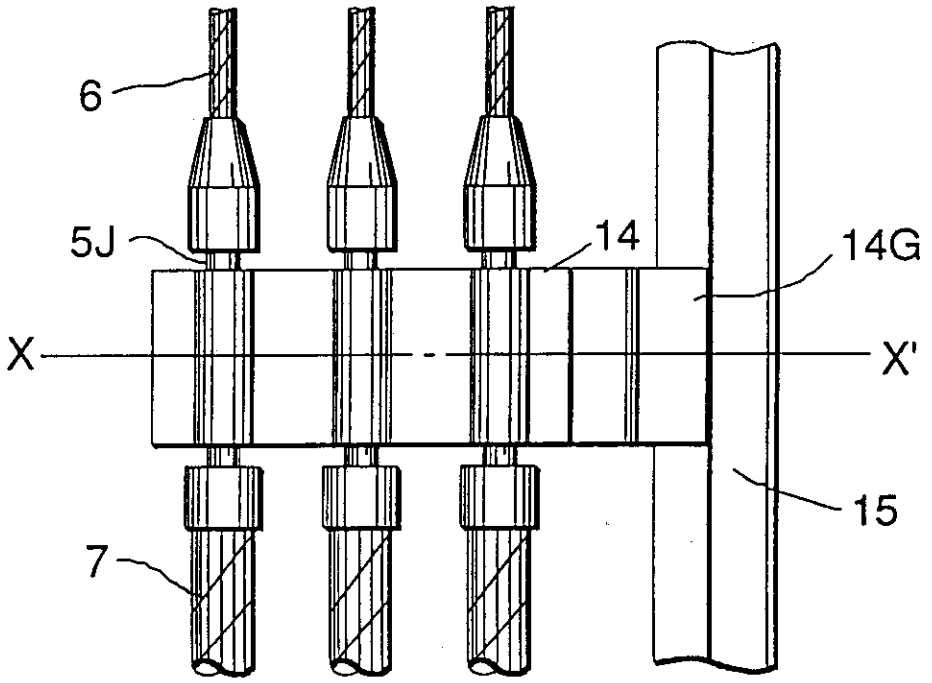

FIG.3B

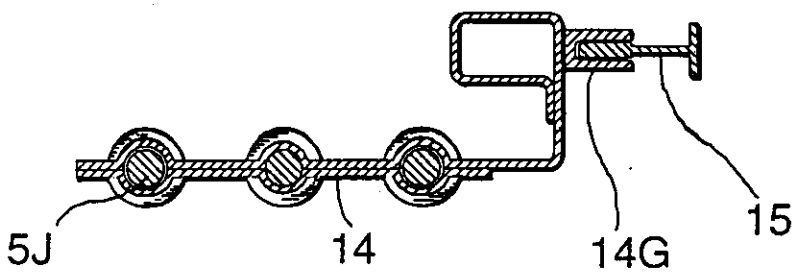

FIG.4

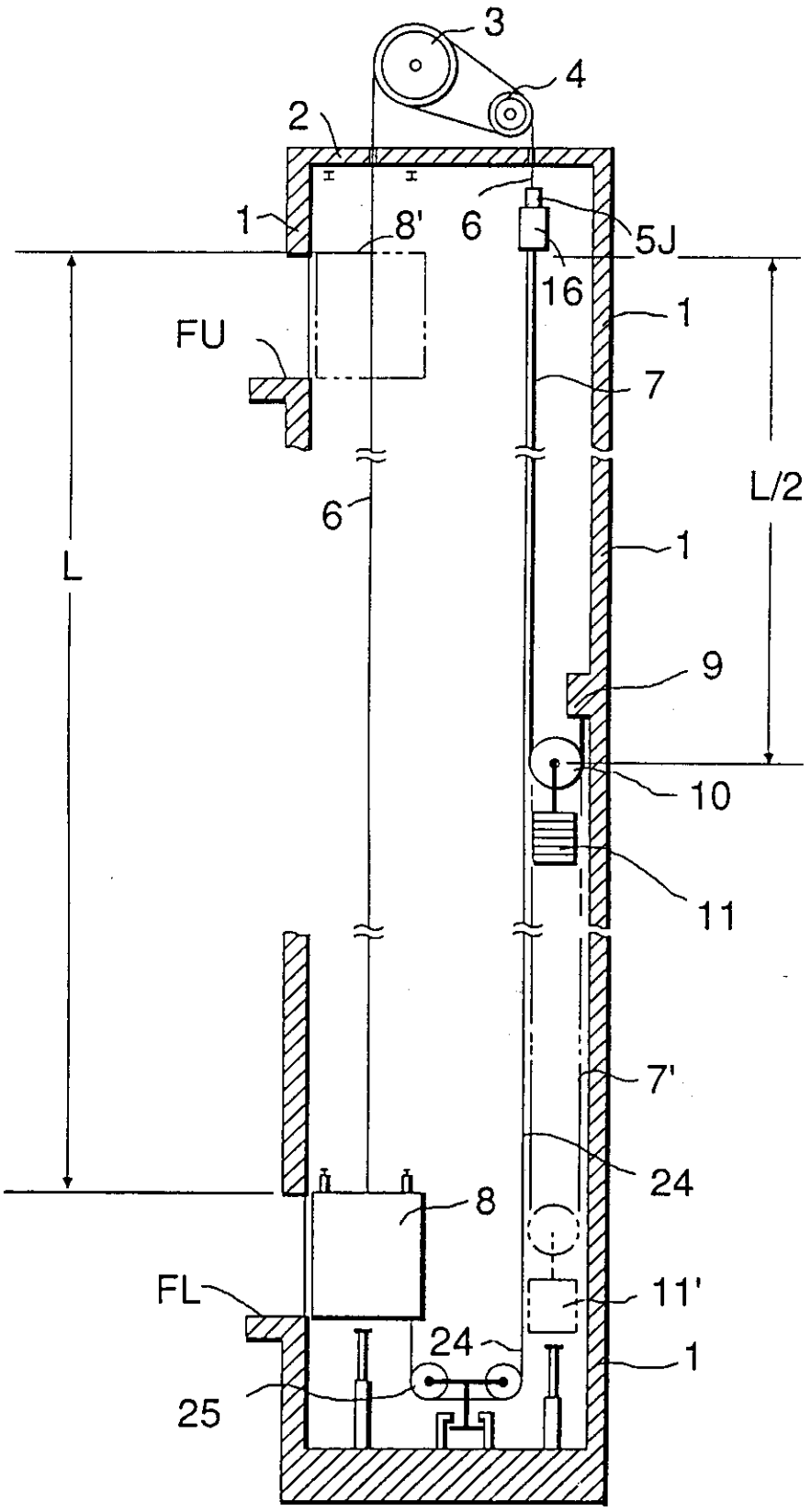

FIG.5

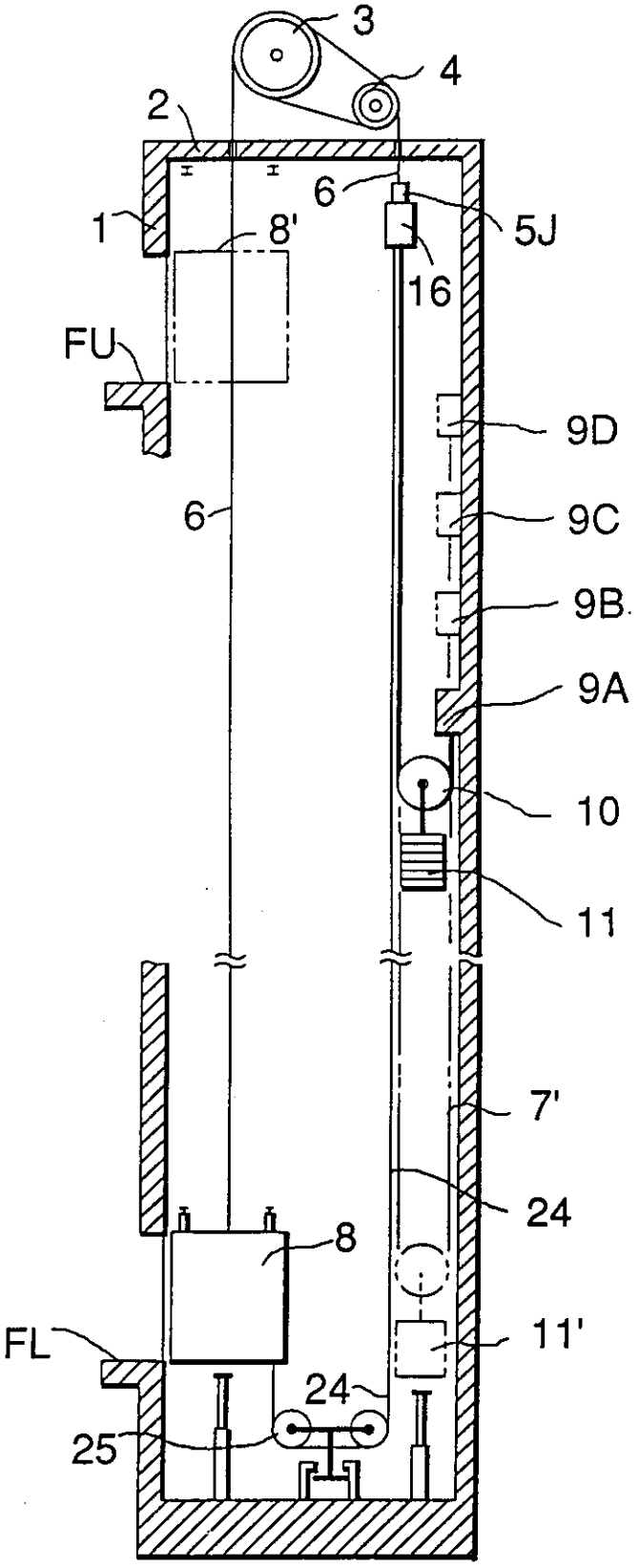

FIG.6

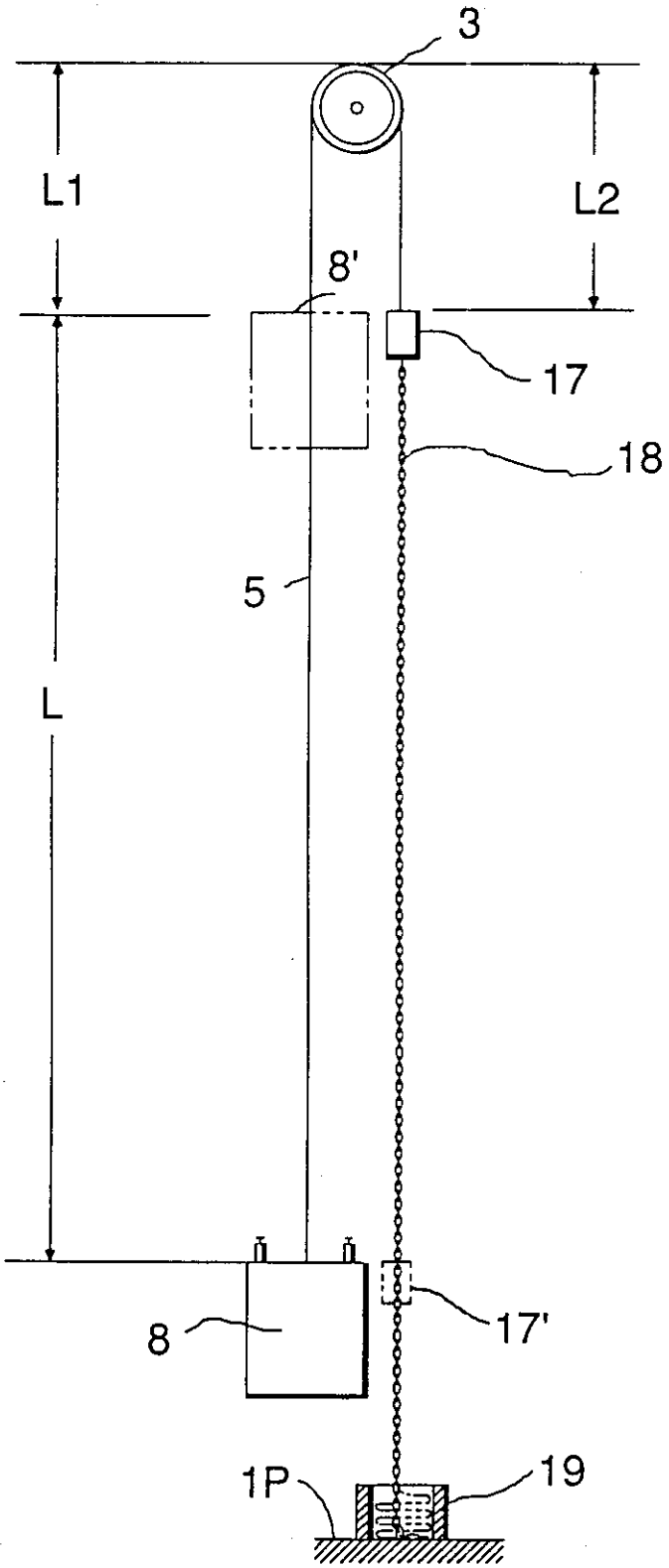

FIG.7

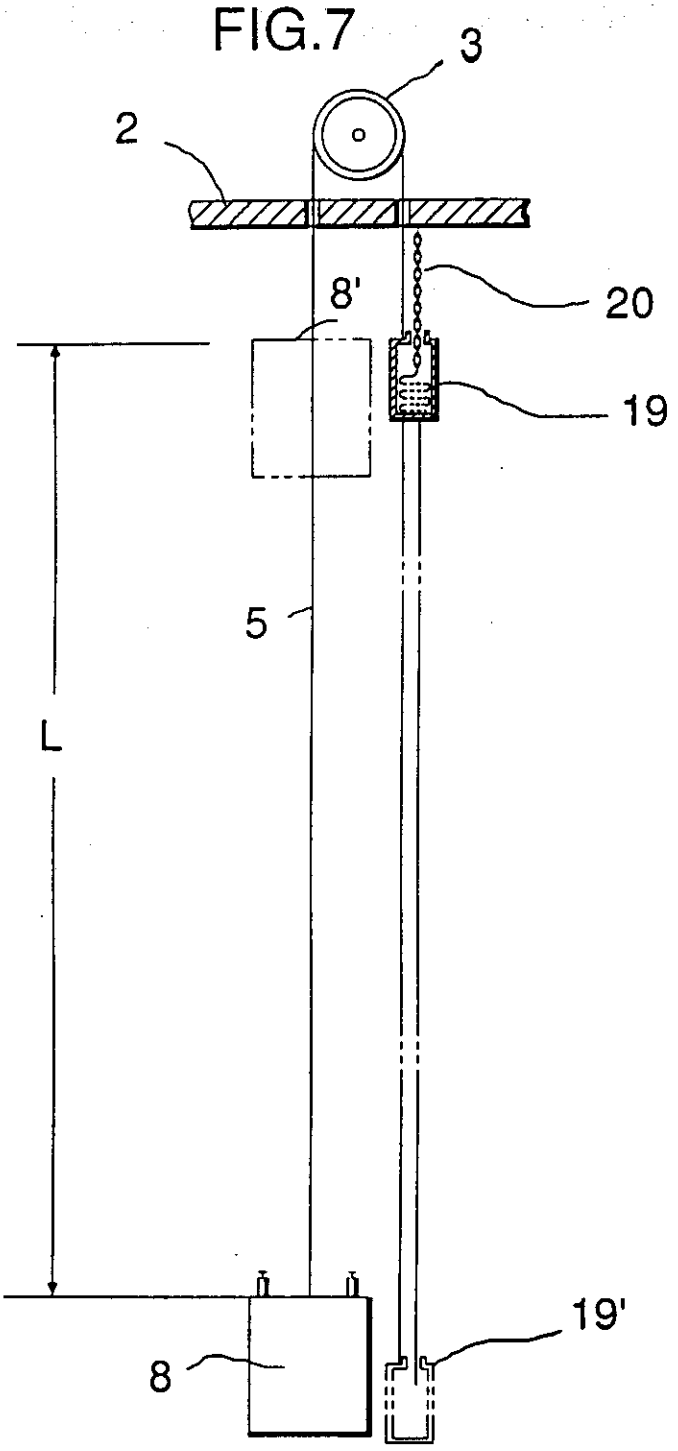

FIG.8

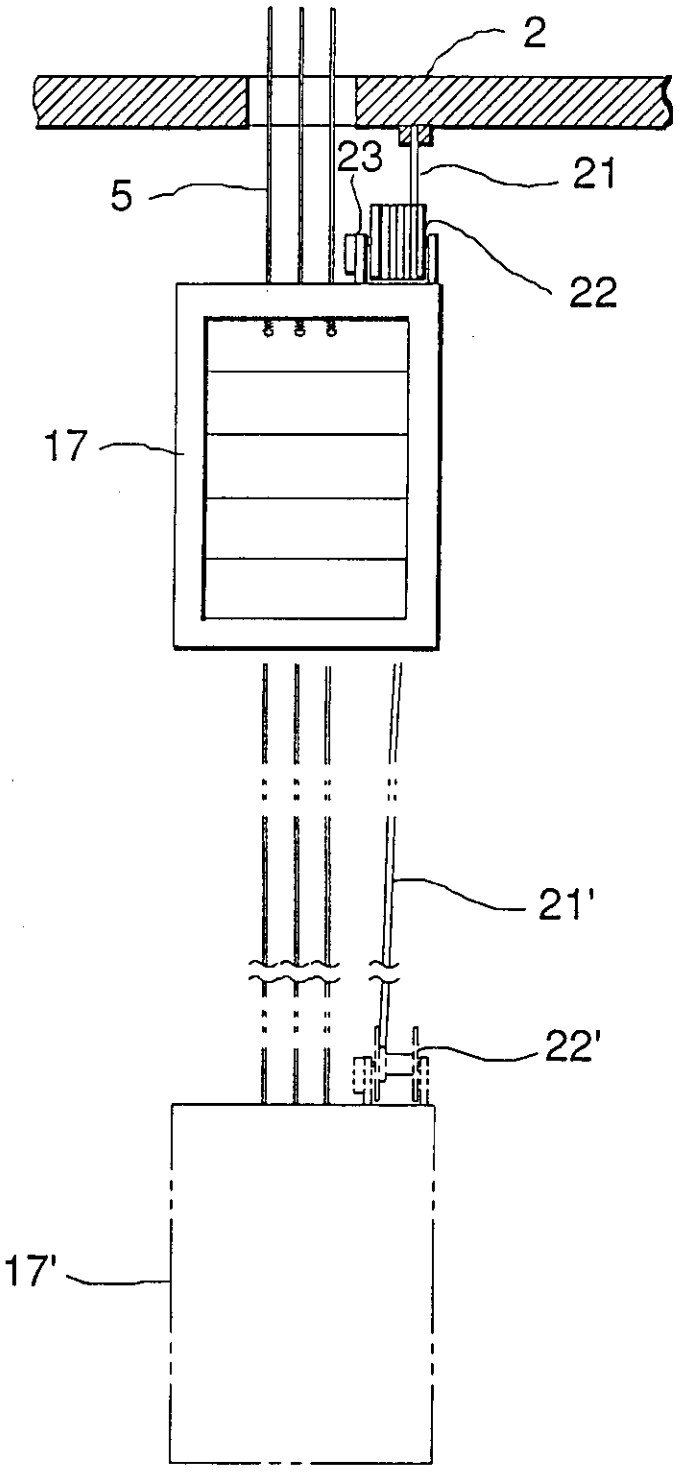

FIG.9

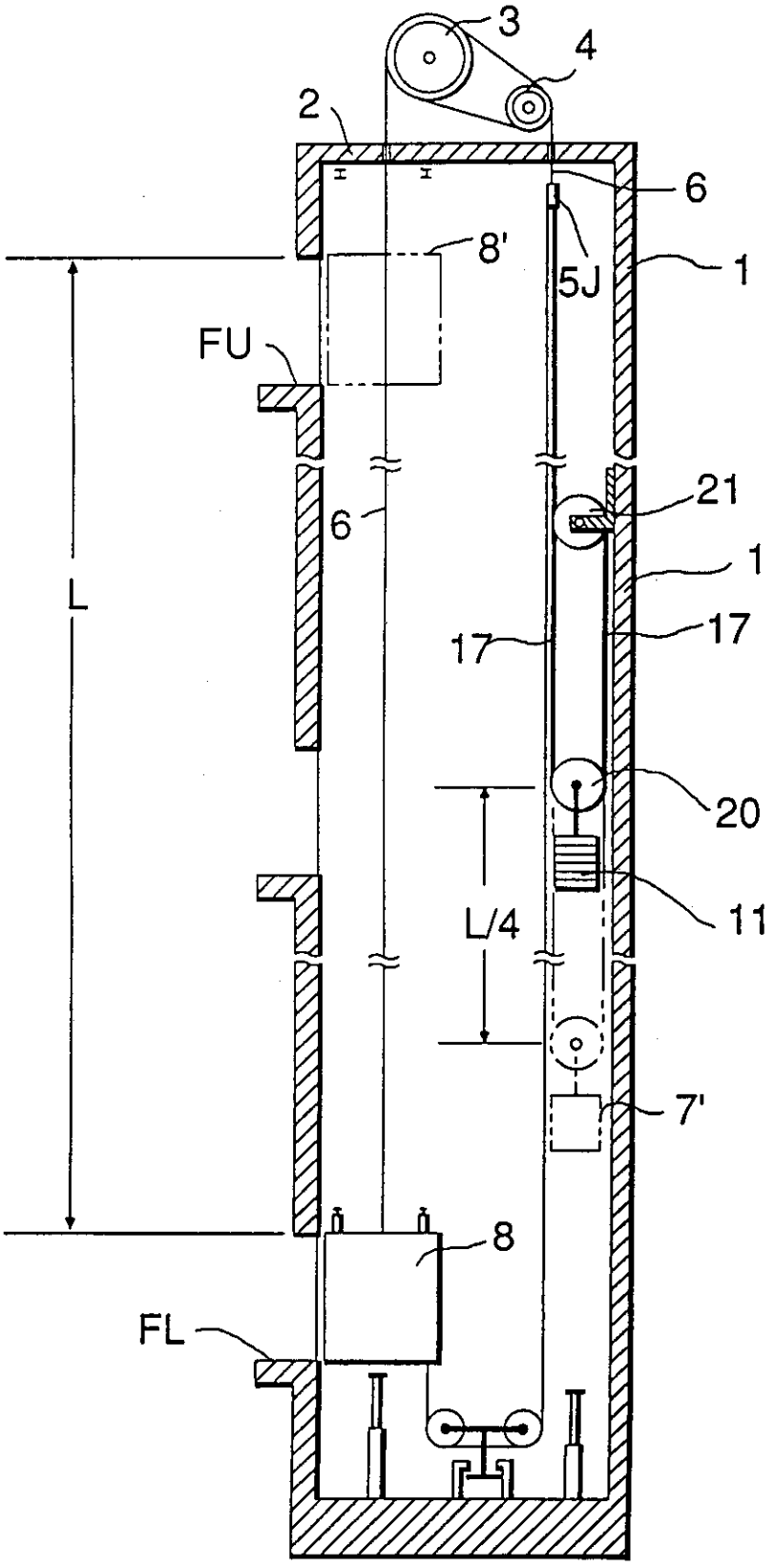

Title of the Invention

Elevator

The present invention relates to an elevator apparatus, and more particularly to the elevator apparatus adapted to a building which has a hoistway for upward and downward running of a car.

An elevator apparatus is generally equipped with a traction machine in a machine room on the top of the hoistway, a driving sheave of the traction machine being wrapped with a rope, the car suspended on one end of said rope and a counterweight suspended on the other end of the rope. In order to prevent an unbalance torque caused by a large weight unbalance between a weight of the rope in a car side and that in a counterweight side from acting on the driving sheave, a plurality of compensating ropes or compensating chains are connected to a bottom of the car as shown in Japanese Patent Publication No. 62-33193(1987) for example, or from a bottom of the counterweight to a middle position of the hoistway as shown in Japanese Patent Laid-Open No. 4-49189(1992) for example.

The first method of this prior art as above has disadvantages that when the car is at the top floor, the total weight composed of the weights of the car and the compensating ropes or chains is maximized, and the emergency stop load becomes considerably large so as to

resultingly require a larger safety device. On the other hand, the method also has disadvantages that unbalance of the weight occurs depending on the position of the car since the weight per unit length of the compensating ropes in every portions thereof is usually designed the same as that of the main rope, and therefore the weight unbalance still remains depending on the position of the car.

The present invention seeks to reduce or overcome the above-mentioned problems of the prior constructions.

An object of the present invention is to provide an elevator apparatus capable of decreasing the weight unbalance caused by ropes so as to permit reduction of the size of a safety device.

Another object of the present invention is to provide an elevator apparatus capable of decreasing the shaft load applied on a driving sheave shaft.

A further object of the present invention is to provide an elevator apparatus capable of decreasing the required capacity of a traction machine.

The present invention provides an elevator apparatus comprising

a car going up and down in a hoistway through plural floors of a building,

a drive sheave for driving the car,

a rope for suspending the car at one end of said rope, wrapped on the driving sheave, and

counterweighting means connected on the other end of the rope, wherein the effective weight acting on the rope of said counterweighting means is continuously

changed according to a change in length of the rope on the car side of the driving sheave by partially transferring the weight of said counterweighting means from said rope to a support fixed to the hoistway, in such a way that said effective weight acting on the rope decreases as the car ascends in the hoistway and increases as the car descends in the hoistway.

More particularly in the present invention, the counterweighting means may consist of a pulley for suspending a counterweight and a second rope wrapped on the pulley suspending the counterweight, wherein said second rope is heavier than the first rope in a weight per unit length thereof, one end of the second rope is connected to the other end of the first rope and the other end of the second rope is connected to a fixed position in the hoistway.

Furthermore, the counterweighting means may consist of a counterweight connected to the other end of the first rope and a second rope suspended down under the counterweight, wherein a length of the second rope suspended down under the counterweight is changed according to a moving distance of the car.

Furthermore, the counterweighting means may consist of a counterweight connected to the other end of the first rope and a second rope suspended down under an upper position of the hoistway, wherein the second rope is accommodated on the counterweight and a length of the second rope suspended down under the upper position is changed according to a moving distance of the car.

Embodiments of the invention are described below by

way of non-limitative example with reference to the accompanying drawings, in which:-

FIG. 1 is a schematic view showing an embodiment of an elevator apparatus in the present invention.

FIG. 2 is a schematic view showing a state of the ropes swing by a moderate gale or an earthquake in the elevator apparatus of FIG. 1.

FIG. 3 is a partial perspective view illustrating a connecting portion between primary and secondary ropes for improving the operational condition of the elevator apparatus in FIG.1 .

FIGS. 4 and 9 are schematic views showing other embodiments of an elevator apparatus in the present invention.

FIG. 5 is a schematic view showing another embodiment of an elevator apparatus in the present invention.

FIG. 6 is a schematic view showing a further embodiment of an elevator apparatus in the present invention.

FIG. 7 is a schematic view showing a still further embodiment of an elevator apparatus in the present invention.

FIG. 8 is a schematic view showing one more embodiment of an elevator apparatus in the present invention.

One of the embodiments of an elevator apparatus applied in the present invention will be explained referring to FIG. 1. Numeral 1 denotes a building, in which a hoistway through plural floors of the building is

provided, 2 a machine room formed on the top of a hoistway, 2S a stopper, 3 a traction sheave, 4 an idle sheave, 5J a connector connecting a primary rope 6 to a secondary rope 7, 8 a car, 9 a fixed portion fixedly provided in the hoistway, 10 a pulley, 11 a counterweight, 12A a car buffer, 12B a counterweight buffer, 13 an upward-running buffer, 24 a connecting rope, 25 spacing pulleys, 26 a stopper.

A traction machine (not shown) is installed in the machine room 2 formed on the top of the hoistway 1. A plurality of the ropes 6 are extended between the traction sheave 3 in the traction machine and the idle sheave 4 placed at a suitable distance from the traction sheave 3 in the manner of double wrap. The rope 6 on the side hanging down from said traction sheave 3 is connected at the end thereof to the car 8 in one-to one roping, and said rope 6 on the side hanging down from the idle sheave 4 is connected to a secondary rope 7 wrapped round the pulley 10 suspending the counterweight 11 in two-to-one roping and connected at the end of the rope 7 to a fixed position9 located in the middle of the hoistway 1.

The primary rope 6 suspending the car 8 and the secondary rope 7 are connected each other by a connector 5J.

Further, the length of the primary ropes 6 is, presuming that the car 8 is on the bottom floor FL of the building 1, at least the sum of the travelling

distance L of the car 8 from the bottom floor FL to the top floor FU, a length (L1 + L2) in which L1 is a length upto the traction sheave 4 and L2 is a length from the idle sheave to the connector 5J as shown in Fig. 1 and a length of the rope 6 wounded by way of the wrapping round the traction sheave 3 and the idle sheave 4.

And the secondary ropes 7 have a length being capable of suspending said pulley 10 at a half level of the length L when said car 8 is on the bottom floor, or in other words when said counterweight 11 is at the uppermost level.

Furthermore, the uppermost travelling level of said connector 5J is nearer to the underside of the floor of the machine room 2 by a length D than the level of the connecting portion between said primary ropes 6 and said car 8, when said car 8 is on the top floor as shown by position of the car 8' in Fig.1.

The lowermost travelling level of the connector 5J is higher than the level of the connecting portion between said primary ropes 6 and said car 8 in the case said car 8 is on the bottom floor, and is nearest the pulley 10.

Next, when the car 8 is on the bottom floor, there will be explained below a relationship between the weight on a side of the car 8 and the weight a side of

the counterweight 11 which are suspended from said traction sheave 3 and said idle sheave 4.

It comes to this that the weight on the car-side suspended from said traction sheave 3 is the sum of the weight of the car 8 (weights of car itself, its attached devices and its accessories, and 50 % embarkation load) and the weight of the primary ropes 6 of the length L and the length L1 up to the traction sheave 3.

On the other hand, the weight on the counterweight-side 11 suspended from said idle sheave 4 is the sum of the weight of the secondary ropes 7 of length L/2 + D from said connector 5J to said pulley 10, the weight of said primary ropes 6 of length L2 from said idle sheave 4 to said connector 5J and a half of the weights of the pulley 10 and the counterweight 11. The weight on the counter-weight-side 11 is adjusted approximately the same with the weight on the car-side 8. The adjustment of the weight balance may be performed with employing a large diameter roping or a massive material as the secondary ropes 7, or with adjusting the weights of the pulley 10 and the counterweight 11.

On the other hand, when the car 8 is on the top floor FU and the length of the primary ropes 6 on the car-side becomes L1, the weight on the car-side 8 is the sum of the car 8 and the weight of the primary ropes 6 of length L1 up to the traction sheave 3. At this situation, the weight on said counterweight-side 11 is the sum of a half of the weights of the pulley 10 and

the counterweight 11 and the weight of the primary ropes 6 of length L and L2. Almost all the weight of said secondary ropes 7 is supported by the fixed portion 9 and does not act on the idle sheave 4.

The car buffer 12A and the counterweight buffer 12B are generally provided opposite to the car 8 and the counter weight 11 suspended in the manner described above in a pit 1P in the hoistway. And the upward-running buffer 13 on the ceiling of the car 8 is generally provided opposite to a stopper 2S on the underside of the floor of said machine room 2 to moderate a strong impact of said car 8 against the underside of the floor of the machine room 2 caused by an inadvertent over-running.

Actually, in addition to the constitution described above, there is a travelling cable (not shown) including power cables and signal wires between the car 8 and the hoistway in the building 1 to supply electric power and signals to the car 8. Although the travelling cable also causes a weight unbalance to the traction sheave 3, the weight unbalance may sufficiently be managed with the friction force between the traction sheave 3 and the primary ropes 6, and is not considered in this embodiment.

Operation of the elevator system having the above described constitution is similar to that of a general elevator system. Rotation of the traction sheave 3 driven by the traction machine fractionally drives the

primary ropes 6 wrapping round the traction sheave 4, and accordingly the car 8 runs upward and downward within the travel of length L and the counterweight 11 runs upward and downward within a half length of L at half a speed of the car 8.

In a case where the weights in the car-side and the counterweight-side are balanced by adjusting the weight of the secondary ropes 7, the weights of the both-sides are expressed by the following equations. Where Wc is the weight of the car 8 which is suspended in one-to-one roping and is in 50 % of embarkation load, Ww/2 is the weight of the counterweight 11 including the pulley 10 which is suspended in two-to-one roping, Wp is the weight of the primary rope 6 of length L, Wh is the weight of the secondary rope of length L/2, ρp is the weight per unit length of the total number of the primary ropes and ρh is the weight per unit length of the total member of the secondary ropes 7.

Firstly, referring FIG. 1, equation (1) below is derived when the car 8 is on the bottom floor, and equation (2) is derived when the car 8 is on the top floor:

$$Wc + Wp = Ww/2 + Wh \quad \text{.....(1)}$$

$$Wc = Ww/2 + Wp \quad \text{.....(2)}$$

$$\therefore 2Wp = Wh \quad \text{.....(3)}$$

And the weights of the primary and the secondary ropes are expressed by equations (4) and (5) as below respectively:

$$Wp = \rho p \cdot L \quad \text{.....(4)}$$

$$Wh = \rho h \cdot L/2 \quad \text{.....(5)}$$

Here, substituting equations (4) and (5) into equation (3),

$$2 \cdot \rho p \cdot L = \rho h \cdot L/2 \quad \text{.....(6)}$$

This means that the weight per unit length of the total number of the secondary ropes ρh is four times as much as the weight per unit length of the total number of the primary ropes ρp. Therefore, in a case where the weight balance is performed by adjusting the weight of the secondary ropes 7, it is perferable to keep the relationship of equation (6) above with the manner such as choosing a secondary rope 7 of which the weight per unit length ρh is four times as mach as that of a primary rope, or using more number of the primary ropes 6 so that the weight per unit length of the total number of the secondary ropes 7 ρh may be four times as much as that of the primary ropes. However, the value described above is not always limited to four times but is avilable within times +/- 20 %, that is, from 3.2 times to 4.8 times, and it depends on the length of the travel or the allowable friction force between the traction sheave 3 and the ropes 6.

Furthermore, the counterweight 11 may be suspended by a movable pulley 20 which is wrapped with a secondary rope 17 in four-to-one roping by way of a fixed pulley 21 fixed on the building 1 as shown in Fig. 9. In this case, when the car 8 goes up to a uppermost position 8'

as shown in Fig. 9, the counterweight 11 does down to a lowermost position 7'. As the rope 17 is doubly wrapped around the movable pulley 20 and the fixed pulley 21, the counterweight 11 and the pulley 20 moves up and down in a speed being a quarter of the moving speed of the car 8 and move a quarter of the distance L according to the moving of the car 8 as shown in Fig. 9. The pulley 21 must be place so that the connector 5J does not strike the pulley 20. The weight per unit length of the total number of the secondary rope 17 is sixteen times as much as the weight per unit length of the total number of the primary rope 6. The end of the rope 17 in counterweight-side is fixed on the fixed pulley 21. In the embodiment shown in Fig. 9, the rope is wound in four to one roping on the pulley 20, and generally in the present invention, the rope may be wound in 2N to one roping, wherein the Numeral N means a positive integer.

Now, a numerical example in the case using the two to one roping of the rope 7 suspending the pully 10 and the counterweight 11 shown in Fig. 1 will be explained based on the aforementioned relationships. Assuming that the total weight of the car 8 including 50% embarkation Wc is 4000kg, the length of the primary ropes 6 being equal to the travel L is 200m, the 8 x Fi(25) - ϕ rope prescribed in Japan Industrial Standards (hereinafter referred to as "JIS") having the weight per unit length of 0.494 kg/m and the breaking force of 7060 kg is chosen for the primary ropes 6, and the safety factor for the ropes is larger than 10, the required

number n for the primary ropes 6 is obtained as follows;

$$(7060 \times n) / (4000 + 0.494 \times n) > 10$$

$$7060n > 10\ (4000 + 0.494 \times 200 \times n)$$

$$7060n > 40000 + 988n$$

$$6072n > 40000$$

$$n > 6.588.$$

This means that the required number of the ropes is seven.

On the other hand, the weight per unit length of the primary rope is 0.494 kg/m, then four times that is 1.976 kg/m. Choosing a rope having a weight mean the value from JIS, the IWRC x W(19) - ¢ 22.4 rope may be found. An example where seven ropes of the ¢ 22.4 are employed for the secondary ropes 7 will be explained below to show small change in suspending weight and decreasing in suspending weight as the car 8 running form the bottom floor to the top floor.

When the car 8 is on the top floor as illustrated by dash-and-dot lines in FIG. 1, the suspending weight Wc on the car side is only the total weight of the car 8 of 4000 kg. The suspending weight on the counterweight-side is the sum of the weight Wp of seven of primary ropes 6 having the length L of 200 m transferred to the counterweight-side and half of the weight Ww of the counterweight 11 including the pulley 10, and this is equal to the total weight Wc of the car 8 of 4000 kg. The weight of said seven ropes is

$$0.494 \text{ kg/m} \times 200\text{m} \times 7 = 691.6 \text{ kg}.$$

Therefore, from equation (2) described above the weight Ww of the counterweight 11 obtained as follows;

4000 kg = 691.6 kg + Ww/2

Ww = (4000 kg - 691.6 kg) x 2 = 6616.8 kg.

Next, when the car 8 is on the bottom floor as illustrated in FIG. 1, the suspending weight on the car-side is the sum of the total weight Wc of the car 8 and the weight Wp of the seven primary ropes 6 having a length L of 200m, and is

4000 kg + 691.6 kg.

On the other hand, the suspending weight on the counter-weight-side is the sum of the weight Wh of the seven secondary ropes 7 having length of L/2 and half the weight Ww/2 of the counterweight 11. Then, the weight Wh of L/2 is obtained as follows;

2.16 kg/m x 100m x 7 in number = 1512 kg.

adding the half weight 3308.4 kg of the counterweight Ww to this value 1512 kg makes 4820.4 kg.

Therefore, when the car 8 is on the bottom floor, no weight unbalance exists as follows;

The suspending weight on the car-side : 4000kg

The suspending weight on the counterweight-side : 4000kg

When the car 8 is on the top floor, the weight unbalance becomes 128.8kg as follows;

The suspending weight on the car-side : 4691.6kg,

The suspending weight on the counterweight-side : 4820.4kg;

However, since this degree of weight unbalance being within +/- 20 % thereof may be easily managed with the friction force between the traction sheave and the ropes, the elevator may run upward and downward without any difficulties. And the decrease in suspending weight on the car-side, as the car runs from the bottom floor to the top, is 691.6kg.

As explained above, the suspending weight on the car-side during upward and downward running is approximately equal to that of the counterweight-side whenever the car 8 is on any floor. Further, when the car 8 is on the top floor FU, the suspending weight on the car-side reduces by the weight Wp of the primary ropes 6 having said length of L which is transferred the counterweight-side and the suspending weight on the counter-weight-side, on the other hand, reduces from 4820.4kg to 400kg since almost all the weight of the secondary ropes 7 is supported by the fixed portion 9 in the hoistway 1 and in turn the suspending weight becomes the sum of the weight Wp of the primary ropes 6 having the length of L transferred from the car-side and half of the weights of the pulley 10 and the counterweight 11.

Therefore, the suspending weight on the counterwight-side is also changed as the car 8 runs upward and downward. The suspending weight acting on the traction machine varies as the weight comes to the minimum or maximum when the car 8 is on the top floor FU

or bottom floor FL. 3

According to the constitution, as explained above, since the suspending weight unbalance between the sides of the car 8 and counterweight 11 due to upward and downward running of the car is small, the unbalance torque acting on the traction sheave 3 is reduced. Thereby, a compensation ropes or the like suspended between the car 8 and the counterweight 11 may be eliminated. Therefore, the total weight suspended from the traction sheave is reduced to miniaturize the safeties device by the reduction in the total weight and also to reduction in the load acting on the traction sheave. Furthermore, since the suspending weight on the car-side calculated with consideration of the weights of the compensating ropes and the car 8, and the tension in the compensating ropes when the car 8 is on the top floor, that is, the emergency stop load is substantially reduced as mentioned above, said safeties device may be miniaturized further.

Incidentally, in the above embodiment shown in Fig. 1, since the primary ropes 6 is connected to the secondary ropes 7 having a larger diameter than the primary ropes by using the connector 5J, the connector 5J behaves as a weight. Therefore, when the connector 5J is at a middle portion between the idle sheave 4 and the pulley 10 in a skyscraper, for example, and the skyscraper is swung by a moderate gale or an earthquake, a plurality of the ropes 5 may swung respectively, as

indicated by two-dot chain lines in FIG. 2, to catch on a device in the hoistway or interact each other.

In the present invention, the swing of said ropes 5 may be prevented by means of making the connector 5J had the construction as illustrated in FIG. 3.

That is, the lowermost ends of the primary ropes 6 are connected to the uppermost ends of the secondary ropes 7 with rod-shaped connectors 5J respectively. The plurality of connector 5J are restrict to move horizonally with a common restrainer 14. The restrainer 14 is fastened to one of the connectors, and the other connectors are horizontally restricted and vertically loose jointed therewith. The restrainer 14 extending along the line of the connectors 5J restricts horizontal movement of said plurality of connectors 5J, and being provided with guide shoes 14G at both end thereof. The guide shoes 14G grapple with guide rails 15 installed in the hoistway to be guided to move upward and downward.

By sliding the restrainer 14 along the guide rails 15 as described above, the ropes 5 are prevented from swinging cause by the swing of the skyscraper.

In the above embodiment, the primary ropes 6 are double-wrapped between the traction sheave 3 and the idle sheave 4 to make the contact angle of the primary ropes 6 to the traction sheave 3 large. However, when the contact angle of the primary ropes 6 to the traction sheave 3 is not required so much, it may be sufficient that the primary ropes 6 is single-wrapped on the

traction sheave 3 as indicated in FIG. 4.

The constructions and effects in FIG. 4 are the same as in FIG. 1 except the following. A counterweight 16 is suspended at the portion of the connector 5J and is guided with guide rails, which may prevent the ropes 5 form swinging caused by mass effect of the connector 5J. In this case, the weights of the pulley 10 and the counterweight 11 needs to be reduced by the corresponding weight for the counterweight 16. Further, in a case where the counterweight 16 is suspended at the connector 5J, a compensating rope or chain needs to be suspended from the bottom of the counterweight 16 to a fixed portion 9 in the hoistway causing the same effect as said secondary ropes in order to adjust weight balance.

In all the embodiments explained above, the secondary ropes 7 are used for adjusting weight and the fixed portion 9 for said ropes 7 is only one portion on the middle floor. One portion on the middle floor of a building has to bear all the weights and tensions of the secondary ropes 7 and then the building 1 is of special design and execution in strength.

Therefore, as illustrated in FIG. 5, a plurality of fixed potions 9A ~ 9D are distributed on a plurality of middle floors respectively and a plurality of the ends of the secondary ropes 7 are connected to the fixed portions 9A ~ 9D. Since this manner reduces the burden of the secondary ropes 7, the design and execution of

the middle floors may be performed in a conventional way. It is preferable that said fixed portions 9A ~ 9D are separately distributed to the middle floors.

Next, other embodiments will be explained, where continuous weight adjustment is performed using a compensating chain 18 as the secondary ropes 7.

Referring to FIG. 6, a rope 5 wrapping round a traction sheave 3 in one-to one roping suspends a car 8 on one side thereof and a counterweight 17 on the other side, said counterweight 17 suspending the compensating chin 18 from the bottom of the counterweight 17. The length of the compensating chain 18 is at least the same length with the traveling distance of the said counterweight 17 from the uppermost to the lowermost positions or the length of which the chain reaches a pit 1P in the hoistway. A chain container 19 installed on the pit 1P is capable of containing almost all the compensating chain 18 when said counterweight 17 is at its lowermost position.

In the constitution as above, the suspending weight of the car 8 and the rope 5 of length L + L1 is approximately the same with the suspending weight of the counterweight 17, the compensating chain 18 of the total length and the rope 5 of length L2 when the car 8 is on the bottom floor, and the suspending weight of the car 8 and the rope 5 of length L1 is approximately the same with the suspending weight of the counterweight 17, the rope 5 of length L + L2 including transferred length of

the car 8, when the car 8 is on the top floor.

In the above constitution, as the car 8 is running upward starting from the illustrated condition (the car 8 is on the bottom floor), the length of the rope 5 in the car-side is gradually shortening since the rope is being transferred to the counterweight-side 17. As the rope 5 is being transferred, the compensating chin 18 is successively being contained into the chain container 19. As the compensating chain 18 is being contained into the chain container 19, the weight of the compensating chain 18 acting on said traction sheave 3 is gradually decreasing by the weight of the chain contained. And when the car 8 finally reaches the top floor, the suspending weight on the car-side becomes to be equal to the sum of the weights of the ropes of length L1 and the car 8, and on the other hand, the suspending weight on the counterweight-side is the sum of the rope 5 of length L coming by being transferred and the rope 5 of length L 2; which results in the balance of these suspending weights.

Therefore, the continuous weight adjustment during upward and downward running of the car 8 is performed and does not cause unbalance without any conventional suspending rope, of which the effect is the same with those of the aforementioned embodiments.

In addition to the embodiment illustrated in FIG. 6, said counterweight 17 may be eliminated by means of using so thick chain for said compensating chain 18 as

to replace the weight of said counterweight 17. This case requires such a modification that said compensating chain 18 is U-shapedly suspended and one end of the chin is fixed to a middle portion of the hoistway.

Referring to FIG. 7, a rope 5 wrapping over a traction sheave 3 suspends a car 8 at one side thereof and a chain container 19 serving as a counterweight at the other side, and a compensating chain 20 is suspended from the underside of floor of a machine room 2. The positional relationship between said car 8 and said chain container 19 is such that when one of the two is on the top floor, the other is on the bottom floor. Said compensating chain 20 is suspended on the same plane of the chain container 19, having such a length that the end of the compensating chain does not burden the chain container 19 when the chain container 19 is on the bottom floor.

In the above constitution, as the car is running upward from the illustrated condition (the car 8 is on the bottom floor), the rope 5 of length L is being transferred to the chain-container-side 19 and gradually shortened to reduce the weight on the car-side 8 by the weight of rope 5 transferred. As the rope 5 is being transferred, the chain container 19 is running downward by the length of the rope transferred and the compensating chain 20 is going out of the chain container 19. The total weight of the chain container 19, thereby, decreases by the amount of the compensating

chain left out and balances with the weight in the car-side. Therefore, the above embodiment also has the same effect as the aforementioned embodiments.

In the embodiment illustrating in FIG. 8, a compensating rope 21 for adjusting weight is suspended from the underside of floor of a machine room 2 on the same plane of a counterweight 17 suspended by a rope 5, said counterweight 17 is provided with a winding drum 22 to wind up said compensating rope 21. The winding drum 22 is driven by a motor 23 controlled as to synchronize with the direction and speed of the operation of a car (not shown). Further, the wound amount of said compensating rope 21 is at the maximum or minimum when said counterweight 17 is on the top floor or the bottom floor respectively.

In the above constitution, the weight of the wound amount of the compensating rope 21 is adjusted so that the suspending weight on the car-side (not shown) balances with the suspending weight on the side of the counterweight winding the compensating rope 17 up to its maximum when said counterweight 17 is on the top floor. Thereby, when the car (not shown) is running upward, the counterweight 17 is running downward with unwinding the compensating rope 21. By means of making the weight of the unwound compensating rope 21 approximately equal to the excess of the sum of the weight of the rope 5 for the length coming into the counterweight-side due to upward running of the car and the weight of the

rope 5 for the length shortened by going out of the car-side, the weight difference between the car-side and the counterweight-side does not occur even when the length of the rope 5 on each side changes by upward and downward running of the car.

Therefore, this embodiment shown in Fig. 8 also has the same effects as the aforementioned embodiments.

In each of the above stated embodiments, the car does not suspend any compensating rope or chain from the bottom thereof to eliminate unbalance torque. Thereby, when a safeties device on the counterweight-side, for example, works by accident during upward running of the car 8, the inertia of the car 8 may move and take off the wrapping rope from the traction sheave by some possibility. Therefore, as shown in FIG. 1, by providing a connecting rope 24 from the bottom of the car 8 to the connector 5J for leap restraint of the car 8, and spacing pulleys 25 and a stopper 26 for upward restraint of the pulleys 25 at the lower bending portion of the connecting rope 24, the upward movement of the car 8 caused by its inertia at an emergency stop may be prevented.

CLAIMS

1. An elevator apparatus comprising

a car going up and down in a hoistway through plural floors of a building,

a drive sheave for driving the car,

a rope for suspending the car at one end of said rope, wrapped on the driving sheave, and

counterweighting means connected on the other end of the rope, wherein the effective weight acting on the rope of said counterweighting means is continuously changed according to a change in length of the rope on the car side of the driving sheave by partially transferring the weight of said counterweighting means from said rope to a support fixed to the hoistway, in such a way that said effective weight acting on the rope decreases as the car ascends in the hoistway and increases as the car descends in the hoistway.

2. An elevator according to claim 1 wherein the counterweighting means comprises

a counterweight, and

a second rope, the second rope being wrapped on the pulley and heavier than the first rope in weight per unit length, one end of said second rope being connected to the other end of the first rope and the other end of the second rope being connected to one or more predetermined positions in the hoistway.

3. An elevator as defined in claim 2 wherein said pulley suspending the counterweight is wrapped with two to one roping of the second rope.

4. An elevator as defined in claim 2 wherein said pulley suspending the counterweight is wrapped with 2N

to one roping of the second rope, wherein N is a positive integer.

5. An elevator as defined in any one of claims 2 to 4 wherein the load acting on the driving sheave is continuously changed according to the position of the car.

6. An elevator as defined in any one of claims 2 to 5 wherein the difference of the weights effective on a car side of the first rope and a counterweight side of the first rope is less than the friction force between the driving sheave and the first rope.

7. An elevator as defined in any one of claims 2 to 5 having means for preventing the connection of said first rope to the second rope from being moved in a horizontal direction.

8. An elevator as defined in claim 2, having weight adjusting means for the weight of the second rope which acts on the connection of the first rope and the second rope.

9. An elevator as defined in any one of claims 2 to 8 wherein the connection of the first rope and the second rope is guided along a guide rail in the vertical direction, to prevent it moving horizontally.

10. An elevator as defined in claim 2, wherein end portions of plural rope units constituting the second rope are separately fixed at plural positions having respectively different heights.

11. An elevator as defined in claim 2, wherein end portions of plural rope units constituting the second rope are separately fixed on the different floors of the hoistway.

12. An elevator as claimed in claim 1 wherein the counterweighting means comprises

a counterweight,

a pulley for suspending the counterweight, and

a second rope, the second rope being connected to the first rope and wrapped on the pulley with two to one roping, an end portion of the second rope being fixed to one or more predetermined positions in the hoistway.

13. An elevator as defined in claim 12 having means for preventing the connection of said first rope and the second rope from being moved horizontally.

14. An elevator as defined in claim 12 having weight adjusting means for the weight of the second rope which acts on the connection of the first rope and the second rope.

15. An elevator as defined in claim 12 wherein the connection of the first rope and the second rope is guided along a guide rail in the vertical direction without moving horizontally.

16. An elevator as defined in any one of claims 12 to 15 wherein end portions of plural rope units constituting the second rope are separately fixed at plural positions having different heights.

17. An elevator as defined in claim 16 wherein end portions of plural rope units constituting the second rope are separately fixed at different floor levels in the hoistway.

18. An elevator as claimed in claim 1 wherein the counterweighting means comprises

a counterweight being suspended at other end of the rope,

a second rope suspended from under the counterweight, and

storage means at a predetermined position relative to the hoistway for receiving a length of said second rope determined by position of the car, so that the length of said second rope whose weight acts on the counterweight varies according to the position of the car.

19. An elevator as defined in claim 18 wherein said second rope is a balancing chain which is partially and varyingly carried at a fixed position of the building in dependence on the position of the car.

20. An elevator as defined in claim 18 wherein said second rope is wound up by a pulley disposed on a fixed position in dependence on the position of the car.

21. An elevator as claimed in claim 1 wherein the counterweighting means comprises

a second rope being suspended from an upper position of the hoistway, and

a counterweight being suspended at other end of the first rope and being adapted to store said second rope varyingly so that the length of said second rope partially stored by said counterweight varies in dependence on the position of the car.

22. An elevator as defined in claim 21 wherein said second rope is a balancing chain.

23. An elevator substantially as herein described with reference to and as shown in any one of Fig. 1, Fig. 4, Fig. 5, Fig. 6, Fig. 7, Fig. 8 and Fig. 9.

REGISTER ENTRY FOR GB2269575

Form 1 Application No GB9316304.6 filing date 05.08.1993

Priority claimed:
07.08.1992 in Japan - doc: 04211242

Title ELEVATOR

Applicant/Proprietor
HITACHI, LTD., Incorporated in Japan, 6 Kanda-Surugadai 4-chome, Chiyoda-ku, Tokyo 101, Japan [ADP No. 00498584002]

Inventors
MASAYUKI SHIGETA, 5222-5 Nakane, Hitachinaka-Shi, Ibaraki 312, Japan [ADP No. 00227835001]

JUN SUGAWARA, 1468-40 Tarasaki, Katsuta-shi, Ibaraki 312, Japan [ADP No. 06388912001]

YOSINARI ATSUMI, Tsukubadai Apartment 11-106, 663 Ichige, Katsuta-shi,Ibaraki 312, Japan [ADP No. 06388938001]

MINORU NIJIMA, 4-21 Namekawa-cho 1-chome, Hitachi-shi, Ibaraki 316, Japan [ADP No. 06388896001]

Classified to
B8B U1S
B66B

Address for Service
MEWBURN ELLIS, 2 Cursitor Street, LONDON, EC4A 1BQ, United Kingdom [ADP No. 00000109001]

Publication No GB2269575 dated 16.02.1994

Examination requested 05.08.1993

Patent Granted with effect from 10.04.1996 (Section 25(1)) with title ELEVATOR

09.04.1994 Notification of change of Address For Service address of
MEWBURN ELLIS, 2 Cursitor Street, LONDON, EC4A 1BQ, United Kingdom [ADP No. 00000109001]
to
MEWBURN ELLIS, York House, 23 Kingsway, LONDON, WC2B 6HP, United Kingdom [ADP No. 00000109001]
dated 14.03.1994. Written notification filed on GB2270363
Entry Type 7.3 Staff ID. BH Auth ID. HEO

**** END OF REGISTER ENTRY ****

RENEWAL DETAILS

PUBLICATION NUMBER GB2269575

PROPRIETOR(S)

Hitachi, Ltd., Incorporated in Japan, 6 Kanda-Surugadai 4-chome, Chiyoda-ku, Tokyo 101, Japan

DATE FILED 05.08.1993

DATE GRANTED 10.04.1996

DATE NEXT RENEWAL DUE 05.08.1997

DATE NOT IN FORCE

DATE OF LAST RENEWAL

YEAR OF LAST RENEWAL 00

STATUS PATENT IN FORCE

**** END OF REPORT ****