(12) INTERNATIONAL APPLICATION PUBLISHED UNDER THE PATENT COOPERATION TREATY (PCT)

(19) World Intellectual Property Organization
International Bureau

(43) International Publication Date
27 March 2008 (27.03.2008)

PCT

(10) International Publication Number
WO 2008/036063 A2

(51) International Patent Classification:
B64D 43/02 (2006.01)

(21) International Application Number:
PCT/US2006/021390

(22) International Filing Date: 2 June 2006 (02.06.2006)

(25) Filing Language: English

(26) Publication Language: English

(30) Priority Data:
60/595,060 2 June 2005 (02.06.2005) US
60/595,355 27 June 2005 (27.06.2005) US

(71) Applicant *(for all designated States except US):* **L-3 COMMUNICATIONS AVIONICS SYSTEMS, INC.** [US/US]; Stevens, Adrienne L., President, 5353 - 52nd Street, S.E., Grand Rapids, MI 49512-9704 (US).

(72) Inventors; and
(75) Inventors/Applicants *(for US only):* **GETSON, Blake, R.** [US/US]; 628 Glenmont Avenue, Columbus, OH 43214 (US). **BRUST, Clifford, S.** [US/US]; 3864 Highmont Street, Beaver Creek, OH 45432 (US).

(74) Agent: **VAN DYKE, GARDNER, LINN & BURKHART, LLP;** BURKHART, Frederick, S., 2851 Charlevoix Drive, S.E., Suite 207, P.O. Box 888695, Grand Rapids, MI 49588-8695 (US).

(81) Designated States *(unless otherwise indicated, for every kind of national protection available):* AE, AG, AL, AM, AT, AU, AZ, BA, BB, BG, **BR,** BW, BY, BZ, CA, CH, CN, CO, CR, CU, CZ, DE, DK, DM, DZ, EC, EE, EG, ES, FI, GB, GD, GE, GH, GM, **HR,** HU, **ID,** IL, IN, IS, **JP,** KE, KG, KM, KN, KP, KR, KZ, LC, LK, LR, LS, LT, LU, LV, LY, MA, MD, MG, MK, MN, MW, MX, MZ, NA, NG, NI, NO, NZ, OM, PG, PH, PL, PT, RO, RU, SC, SD, SE, SG, SK, SL, SM, SY, TJ, TM, TN, TR, TT, TZ, UA, UG, US, UZ, VC, VN, YU, ZA, ZM, ZW

(84) Designated States *(unless otherwise indicated, for every kind of regional protection available):* ARIPO (BW, GH, GM, KE, LS, MW, MZ, NA, SD, SL, SZ, TZ, UG, ZM, ZW), Eurasian (AM, AZ, BY, KG, KZ, MD, RU, TJ, TM), European (AT, BE, BG, CH, CY, CZ, DE, **DK,** EE, ES, FI, FR, GB, GR, HU, IE, **IS, IT,** LT, LU, LV, MC, NL, PL, PT, **RO,** SE, **SI,** SK, TR), OAPI (BF, **BJ,** CF, CG, CI, CM, GA, GN, GQ, GW, ML, **MR,** NE, SN, TD, TG).

Declaration under Rule 4.17:
— *of inventorship (Rule 4.17(iv))*

[Continued on next page]

(54) Title: AIRCRAFT AVIONIC SYSTEM HAVING A PILOT USER INTERFACE WITH CONTEXT DEPENDENT INPUT DEVICES

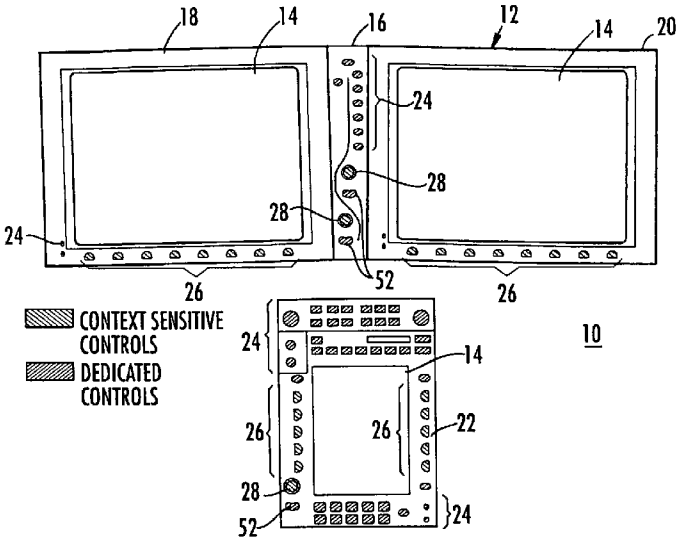

(57) Abstract: An avionics system having a pilot user interface, and method of interfacing with a pilot, includes providing a display screen and a video processor driving the display screen. A plurality of context dependent input devices is provided. Operation of at least one of the input devices may cause the processor to display a rotary selection list on the display screen. The rotary selection list includes multiple potential selections, each capable of effecting a change in the avionic system when highlighted. At least one of the input devices may be made up of at least one rotary knob. The processor displays a context dependent label for the rotary knob.

WO 2008/036063 A2

Published:
— *without international search report and to be republished upon receipt of that report*

AIRCRAFT AVIONIC SYSTEM HAVING A PILOT USER INTERFACE WITH CONTEXT DEPENDENT INPUT DEVICES

BACKGROUND OF THE INVENTION

The present invention is directed to an aircraft avionics system for monitoring and controlling aircraft flight parameters and, in particular, to a pilot user interface that provides information to and receives instructions from a pilot.

The pilot interface of known aircraft avionic systems is relatively complex and requires extensive training by the pilot. A trained pilot is able to create a mental picture of what is occurring with the aircraft by monitoring various dials and other indicators. Full-time pilots get extensive training on system operation including recovery from various failure modes.

General aviation pilots, in general, do not necessarily have the level of training of a full-time pilot. As such, it is imperative that the flight controls in general, and especially those used for general aviation pilots, avoid pilot confusion and help the pilot create a mental picture of what is occurring with the aircraft at all times.

SUMMARY OF THE INVENTION

The present invention is directed to an aircraft avionics system that integrates information together and provides it in a more readable format to the pilot. The present invention provides a pilot user interface with a display screen that is capable of displaying extensive data to the pilot, such as moving maps that place the aircraft so that the pilot can see on a map where the aircraft is located. The display screen may also show terrain so that the pilot can know when the aircraft is close to obstacles. The display screen can integrate tactical instruments that show the state of the aircraft, such as altitude, airspeed, vertical speed, and the like.

An avionics system having a pilot user interface and method of interfacing with a pilot, according to an aspect of the invention, includes providing a display screen and a video processor driving the display screen. A plurality of context dependent input devices is provided. Operation of one of the input devices causes the processor to display a rotary selection list on the display screen. The rotary selection list includes multiple potential selections, each capable of effecting a change in the avionic system when highlighted. According to this aspect of the

invention, subsequent operation of the corresponding input device causes a different one of the selections to be highlighted. This allows the pilot to select between options using the rotary selection list that is associated with a particular context dependent input device, such as a context sensitive button or softkey. The rotary selection list is a menu of selectable options. The rotary selection list menu associated with the softkey may remain hidden until the softkey button is actuated. The rotary selection list menu is then displayed (pops up) upon actuation of the softkey button and depicts multiple selections, one of which will be highlighted. By repeatedly pressing the softkey button, the system cycles through the available selections. Advantageously, this allows the pilot at all times to be able to observe the selections that are available to the pilot including other available states without changing the context of the display the pilot is currently in. This allows a shallow menu hierarchy.

An aircraft avionics system having a pilot user interface and method of interfacing with a pilot, according to another aspect of the invention, includes providing a display screen and a video processor driving the display screen. A plurality of context dependent input devices is provided. At least one of the input devices is made up of at least one rotary knob. The processor displays a context dependent label for the rotary knob. The processor displays an editable parameter of the avionics system, wherein the rotation of the rotary knob edits a portion of the parameter or the parameter in total. The rotary knob may be made up of a large rotary knob and a small rotary knob that is smaller than and concentric with the large rotary knob. Rotation of the large rotary knob may be used to edit a most significant portion of the parameter and rotation of the small knob edits the least significant portion of the parameter. In addition, the small knob may be actuatable along its axis of rotation to perform an additional function, such as selection of a particular parameter value. A context dependent label may be provided for the large rotary knob, the small rotary knob and/or the push function of the small rotary knob.

A feature may be provided that allows for inhibiting particular rotary list selection items based on the context of the avionic system at the time the softkey button is actuated. In the illustrative embodiment, these list items are "grayed out" and cannot be selected by the control. This allows a design that prevents access to functionality when the functionality is not possible or should be prevented, such as for safety reasons.

These and other objects, advantages and features of this invention will become apparent upon review of the following specification in conjunction with the drawings.

BRIEF DESCRIPTION QF THE DRAWINGS

Fig. 1 is an elevation of a pilot user interface, according to the invention;

Fig. 2 is a diagram representing a dual concentric knob;

Fig. 3 is a diagram illustrating an example of user interface architecture;

Fig. 4 is a diagram illustrating split parameter editing;

Fig. 5 is a diagram illustrating editing of alphanumeric parameters;

Fig. 6 is a diagram illustrating context sensitive labeling of a dual concentric knob;

Fig. 7 is a chart illustrating examples of parameter edit functions that may be performed by a context sensitive dual concentric knob;

Fig. 8 is a screen display of a pop-up menu selection list;

Fig. 9 is an illustration of context sensitive buttons, or softkeys;

Fig. 10 is a screen display of a softkey rotary selection list; and

Figs. 11a and lib are screen displays of an alternative soft key rotary selection list.

DESCRIPTION QF THE PREFERRED EMBODIMENT

Referring now specifically to the drawings, and the illustrative embodiments depicted therein, an aircraft avionics system 10 includes a pilot interface 12 (Fig. 1). The pilot user interface includes one or more display screens 14 and one or more video processors (not shown) driving the display screen(s). It should be understood that the term video processor is not intended to be limited to any particular electronic hardware or software configuration. In the illustrative embodiment, the display screens are solid-state displays, such as liquid crystal displays, plasma displays, or the like. However, the invention is useful with other forms of electronic displays, such a cathode ray tubes, and the like.

In the illustrative embodiment, the pilot user interface is made up of a flight display controller 16 that controls the behavior of the primary flight display 18, a multifunctional display 20, or both. The pilot user interface may further include a center control unit 22. Multifunctional display 20 may also function as a reversionary flight display upon failure of either the primary flight display 18 or the center control unit 22.

Pilot interface 12 includes one or more dedicated buttons 24. Dedicated buttons have a permanently affixed label on the surface of the button that indicates the function that the buttons will perform when pressed or otherwise actuated. Examples of functions performed by dedicated buttons include activation of the reversionary display page on both the primary flight display 18 and multifunctional display 20, display of crew alert and warning system (CAWS) messages, radio controls, map controls, and the like.

Pilot user interface 12 additionally includes one or more context sensitive buttons 26, which are also referred to as softkeys. Context sensitive buttons 26 provide programmable functionality for each display format based on the selected function, as will be described in more detail below. Pilot user interface 12 may further include one or more context sensitive knobs 28. Context sensitive knobs 28 include context-related functional labels on the display screen adjacent to the knob, as will be described in more detail below.

In the illustrative embodiment, context sensitive knobs 28 include one or more dual concentric knobs 30. A dual concentric knob 30 includes a large rotary knob 32, a small rotary knob 34 and a push button function 36 that is carried out by pressing small rotary knob 34 in the direction of its axis of rotation. One function of large rotary knob 32 is to move a selected highlight between different fields or items on a display, as will be described in more detail below. Thus, the large rotary knob can be used to scroll list items and character sequences. As will also be disclosed in more detail below, the large rotary knob may be used to edit the most significant digits of a numeric parameter on a split parameter edit. An example would be to edit the MHz portion of a radio frequency. Small rotary knob 34 may be used to edit alphanumeric characters and numeric parameters. It may also be used to edit the least significant digits of a numeric parameter when used in combination with the large rotary knob 32. An example is to edit the kHz portion of a radio frequency. Push button function 36 may be used to take a single context sensitive action related to the functionality group being performed. For example, the push button function may be used to synchronize values, swap frequency fields, transponder identification, activation of the map cursor and accepting entries from lists and certain edits.

An example of the interfaced architecture of pilot user interface 12 is illustrated in Fig. 3. A function of a dedicated button 24, which is typically at the

top level of the architecture, is to change the display page format. The new page format is supported by graphically updated context sensitive controls. At the next level, the context sensitive buttons will bring up lower level functions and/or change the functionality access. This helps to keep the interface shallow and to minimize the number of button presses and pilot actions that must be performed to get to a specific function. In the example illustrated in Fig. 3, a radio function 40a represents a dedicated button 24. Once the dedicated radio button is pressed, the dual concentric knob 30 changes functionality to perform editing and swapping of frequencies. At the same time, context sensitive buttons 26 allow access to volume 40b and auto-squelch functions 40c. Then, when the volume context sensitive button is pressed, the label and functionality of dual concentric knob 30 is changed to allow editing of the radio volume. Once that operation is complete, the prior functionality of editing and swapping of frequencies is restored.

Operation of split parameter editing is illustrated with respect to Fig. 4. In split editing with decimal 42a, the large and small rotary knobs 32, 34 edit a separate part of the parameter. In split parameter editing with decimal 42a, the large rotary knob 32 is used to edit values to the left of the decimal point. The small rotary knob 34 edits values to the right. In split editing without decimal 42b, the large rotary knob 32 is used to edit the left half values, or most significant digits, and the small rotary knob 34 edits the right values of the parameter, or the least significant digits. Editing of alphanumeric parameters is illustrated with respect to Fig. 5. The large rotary knob 32 may be used to move the highlighting left and right as illustrated by the arrow in Fig. 5. Small rotary knob 34 may be used to change the value of each highlighted character. Other uses for a context sensitive dual concentric knob will be apparent to the skilled artisan.

Labeling of dual concentric knobs 30 is illustrated with respect to Fig. 6. A label display 44a, 44b may be a transparent background-three-legged graphic that points to the small and large rotary knobs 32, 34 and the push button function 36 and support labels that correspond to the identity of each of the functions available. Each of the three-legged graphic labels are context dependent labels. Label 44a is used for displays that are positioned to the left of the dual concentric knob. Display 44b is used for dual concentric knobs to the left of the display. The label display may be a dedicated display or may be displayed on a portion of the corresponding display screen 14 that is adjacent to the respective dual concentric knob. Where

only a portion of the dual concentric knob has functionality, the portions of the dual concentric knob that have functions are labeled with text. The other portions are left blank. The processor may be adapted to separately highlight each of the graphic labels of either three-legged graphic 44a or 44b. The highlighted context dependent label identifies which of the knobs 32, 34 or push button 36 have active functions associated with corresponding controls.

Examples of parameters that can be edited with a dual concentric knob 30 are illustrated in Fig. 7. It should be understood that this list is by way of example and is not intended to be exhausted. Reference in the list to an acceleration function is in reference to editing speed. When a large or small rotary knob is rotated at a rate below a particular time threshold established for that parameter, the parameter is increased or decreased by a minimum increment established for the parameter being edited. This is referred to as normal-speed editing. When a knob is rotated at a speed at or above the particular time threshold established for that parameter, the parameter is increased or decreased by the maximum increment established for the parameter being edited. This is referred to as accelerated speed editing.

A pop-up list 46 may be used in combination with a dual concentric knob 30 (Fig. 8). Normally, the popup list is hidden until a user interface action occurs that causes the list to display. Once the pop-up list is displayed, a portion 48 is highlighted. The pilot may scroll the highlighted portion through the various parameters, such as by rotating the large rotary knob 32.

As previously set forth, pilot user interface 12 includes bush button controls that are categorized into "dedicated" and "context sensitive" buttons. Dedicated buttons with permanent labels are also referred to as hard keys and generally perform the same function. Dedicated buttons can be made context sensitive through an associated rotary list menu. In particular, a particular hard key selectable category of a rotary list menu may take the user interface to displays related to the category selected. Context sensitive buttons 26 perform different functions based upon the current display format and/or function to be performed. Context sensitive buttons 26 have labels 50a, 50b that are rendered on display screen 14 adjacent to each button having a function (Fig. 9). Context sensitive buttons may also be referred to as softkeys. Some buttons with permanent labels may be hybrid buttons having a context sensitive operation. For example, the function of a back button 52 located under a context sensitive knob 28 depends upon what function is being

performed. When editing, the back button 52 may cancel the edit. When not editing, the back button 52 may return the user interface to a higher level. In addition, it is possible that a single function may be accessed from the two different areas within the user interface. When this occurs, back button 52 will return to the location of the user interface from which the function was accessed. The back-up button may also be used to back up steps, such as one step per press of the button, in a sequence of operations. Labels may be static labels 50a or dynamic labels 50b. A context sensitive button 26 may be statically labeled using one or two lines of text that never changes when the softkey label is displayed as illustrated in Fig. 9. A label may, alternatively, be a dynamic label 50b that is used when the entire label needs to change to indicated multiple related selections. An example of a dynamic softkey label 50b is illustrated with respect to Fig. 10.

Fig. 10 illustrates a softkey rotary selection list 54. Rotary softkey selection list 54 is associated with a softkey dynamic label 50b. Rotary selection list 54 is displayed upon press of the softkey with which the list is associated. The first press of the softkey only displays the list. One item is highlighted as illustrated at 56. Subsequent presses of the corresponding softkey 26 move highlighted area 56 from one item 58 to another item 58. As each item is selected, an associated change in the system takes place. Text field 60 of dynamic softkey label 50b changes with the selection of item 58 by highlight 56. Dynamic label 50b may additionally include a parameter field 62 to display the parameter associated with text field 60, which, as previously set forth, is the highlighted item 52 from the rotary selection list. Particular rotary list selection items may be inhibited based upon the context of the avionic system at the time the softkey button is activated. These "grayed out" list items cannot be selected by the control. This allows a product design that prevents access to functionality when the functionality is not possible or should be prevented, such as for softkey reasons.

An alternative soft key rotary selection list 150 includes a soft key 155 which has a soft key label 150a of the functions the rotary list is associated with and a window 150b that contains the current selection from the rotary list. Upon first press of soft key 155, a rotary list 154 is displayed. Rotary list 154 includes possible selections 158. Subsequent presses of soft key 155 cycles the highlighted area 156, such as from top to bottom and then wrapped back to the top. After an interval of time, such as 3 seconds, for example, the rotary list will be removed from the

display. The selected item will appear in the soft key window 150b and the selection will become active.

An advantage of the rotary selection list is that it allows the pilot to view all of the selections available with the rotary selection list. This provides more information to the pilot without adding additional layers to the architecture. Thus, pressing of a context sensitive button 26 associated with a rotary selection list 54 causes the list to popup out of the label associated with the button and display the items available for selection. Then, by repeated pressing of the softkey 26, the highlighted item cycles through the various selections that are available. This displays to the pilot the available states without changing the context of the display. Also, the softkey label may be able to display the current selection of the rotary list, or a related status, without having to press the softkey button.

Changes and modifications in the specifically described embodiments can be carried out without departing from the principles of the invention. For example, although various input devices are illustrated as hardware push buttons and rotary knobs, they may be performed by other mechanisms, such as touch screens, locating devices, and the like. Also, soft keys having rotary lists associated with them may be identified as such. The invention is intended to be limited only by the scope of the appended claims, as interpreted according to the principles of patent law including the doctrine of equivalents.

The embodiments of the invention in which an exclusive property or privilege is claimed are defined as follows:

1. An aircraft avionic system having a pilot user interface, said system comprising:

a display screen;

a video processor driving said display screen; and

a plurality of context dependent input devices, wherein operation of one of said input devices causes said processor to display a rotary selection list on said display screen, said rotary selection list including a menu of selectable options, each capable of effecting a change in said avionic system when highlighted and wherein subsequent operation of said one of said input devices causes a different one of said selectable options to be highlighted.

2. The system as claimed in claim 1 wherein said input devices comprise at least one selected from push buttons and a touch screen.

3. The system as claimed in claim 1 or claim 2 wherein said processor is adapted to drive said display screen to display a parameter associated with the highlighted one of said selections.

4. The system as claimed in claim 3 wherein at least one of said input devices comprising at least one rotary knob, said processor adapted to drive said display screen to display a context dependent label for said at least one rotary knob and wherein rotation of said at least one rotary knob edits at least a portion of said parameter.

5. The system as claimed in any of the preceding claims wherein said rotary selection menu remains hidden until operation of said one of said input devices.

6. The system as claimed in claim 5 wherein said rotary selection list becomes displayed upon actuation of said one of said input devices with one of said options highlighted.

7. The system as claimed in any of the preceding claims wherein said one of said input devices comprises a soft key.

8. The system as claimed in any of the preceding claims wherein said rotary selection list includes at least one inhibited option that is inhibited from effecting a change in said avionic system under particular context of said aircraft avionic system.

9. An aircraft avionic system having a pilot user interface, said system comprising:

a display screen;

a video processor driving said display screen; and

a plurality of context dependent input devices, at least one of said input devices comprising at least one rotary knob, said processor adapted to drive said display screen to display a context dependent label for said at least one rotary knob and said processor adapted to drive said display screen to display a parameter of said avionic system, wherein rotation of said at least one rotary knob edits at least a portion of said parameter.

10. The system as claimed in claim 9 wherein said at least one rotary knob comprises a large rotary knob and a small rotary knob that is smaller than and concentric with said large rotary knob.

11. The system as claimed in claim 10 wherein rotation of said large rotary knob edits a most significant portion of said parameter and rotation of said small rotary knob edits a least significant portion of said parameter.

12. The system as claimed in claim 10 or claim 11 wherein said processor is adapted to drive said display to display a plurality of parameters of said avionic system and wherein rotation of said large rotary knob causes said processor to drive said display to highlight different ones of said parameters.

13. The system as claimed in any of claims 10 through 12 wherein rotation of said small knob edits the one of said parameters that are highlighted.

14. The system as claimed in any of claims 9 through 13 wherein said processor is adapted to display context dependent labels for said large and small rotary knobs.

15. The system as claimed in claim 14 wherein said processor is adapted to separately highlight each of said context dependent labels to identify which of said knobs have active functions associated with corresponding controls.

16. The system as claimed in any of claims 10 through 15 wherein said small rotary knob rotates about an axis of rotation and wherein said small rotary knob is adapted to be actuated in a direction of said axis of rotation.

17. The system as claimed in claim 16 wherein said processor is adapted to display context dependent labels for said large and small rotary knobs and said actuation of said small rotary knob in said direction of said axis of rotation.

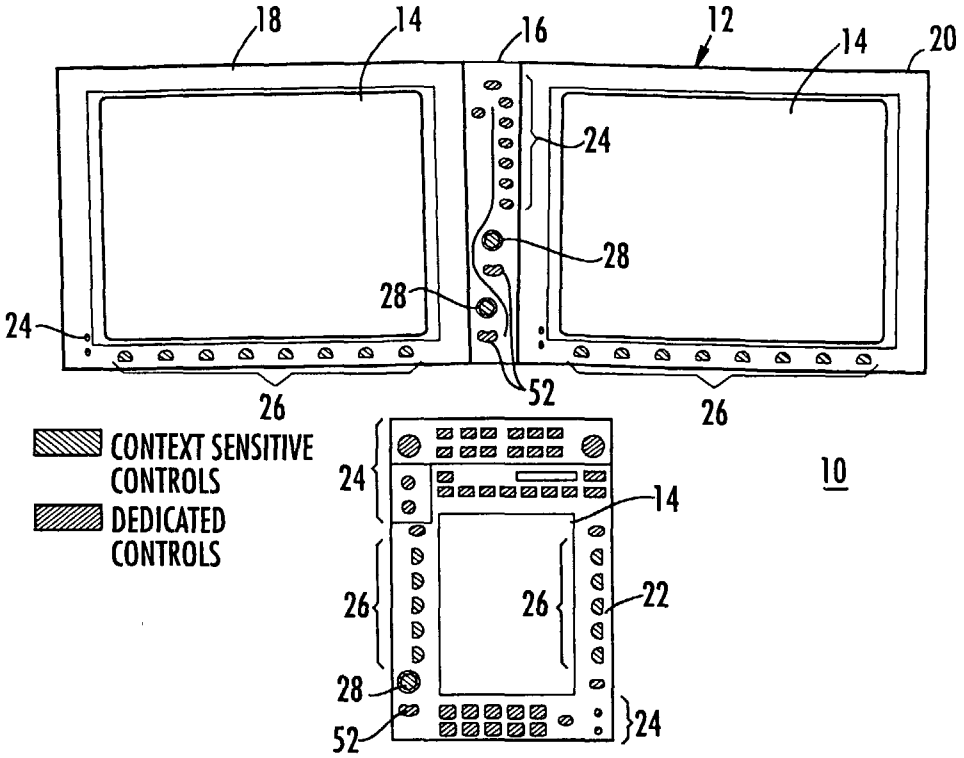

FIG. 1

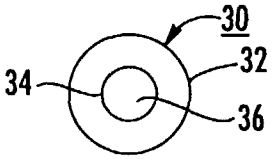

FIG. 2

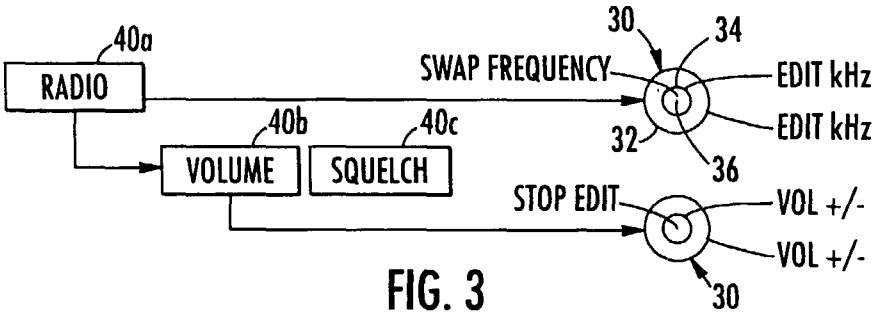

FIG. 3

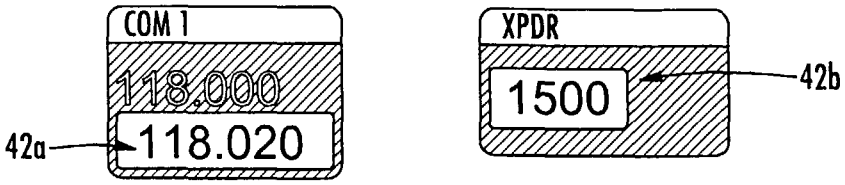

FIG. 4

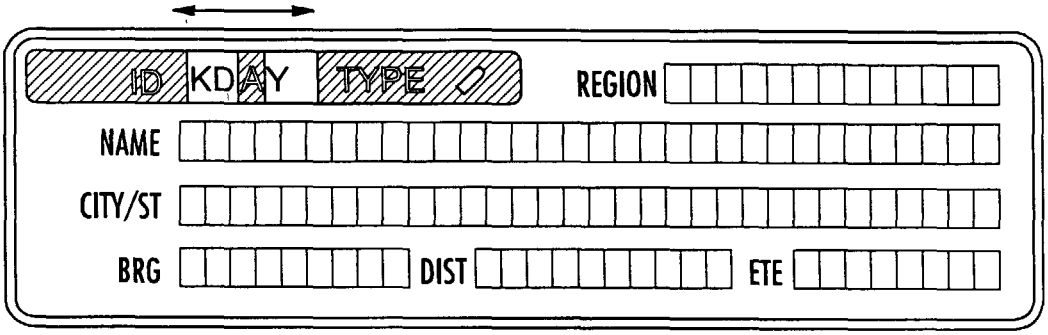

FIG. 5

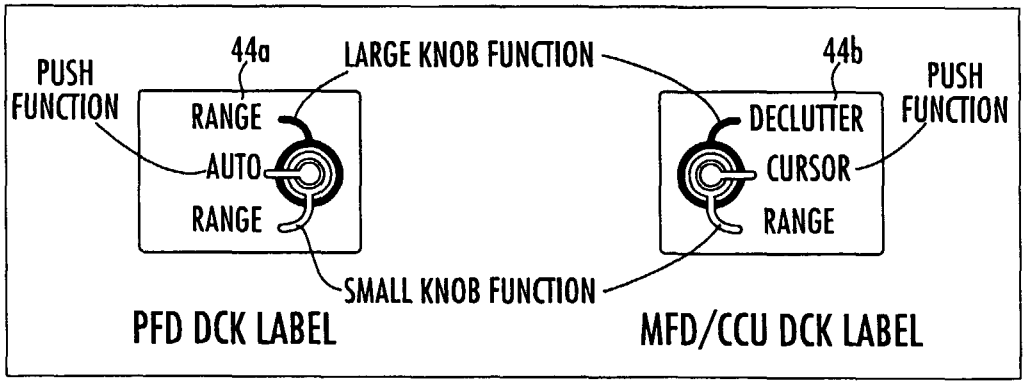

FIG. 6

DETAILED FUNCTIONS OF THE CONTEXT SENSITIVE DCKs

DCK FUNCTION	LARGE KNOB	SMALL KNOB	PUSH	NOTES
CURSOR EDIT	SELECT CHAR, CW MOVE RIGHT, CCW MOVE LEFT	EDIT CHAR, CW INCREASE, CCW DECREASE	ACCEPT AND TERMINATE EDIT	SMALL KNOB ACCELERATION OF CHARACTER SELECTION
NUMERIC EDIT	CW INCREASE VALUE, CCW DECREASE	CW INCREASE VALUE, CCW DECREASE	SET TO PREDEFINED VALUE (CONTEXT SPECIFIC)	LARGE AND SMALL KNOB ACCELERATION IS PERMITTED
SPLIT NUMERIC EDIT	CW INCREASE VALUE, CCW DECREASE HIGH DIGITS	CW INCREASE VALUE, CCW DECREASE LOW DIGITS	CONTEXT SPECIFIC FUNCTION	LARGE AND SMALL KNOB ACCELERATION IS PERMITTED
LIST SCROLLING	CW SCROLL TOP TO BOTTOM, CCW SCROLL BOTTOM TO TOP	NO FUNCTION OR SWITCHES TO CURSOR EDIT MODE WHEN APPLICABLE	ACCEPTS HIGHLIGHTED LIST ITEM WHEN APPLICABLE	NO ACCELERATION, DISPLAY ONLY LISTS HAVE NO HIGHLIGHTED SELECTION
ITEM SCROLLING	CW SCROLL LEFT TO RIGHT AND DOWN, CCW RIGHT TO LEFFT AND UP	NO FUNCTION OR CONTEXT SPECIFIC FUNCTION IN MIXED MODE	TOGGLE STATE OF ITEM	

FIG. 7

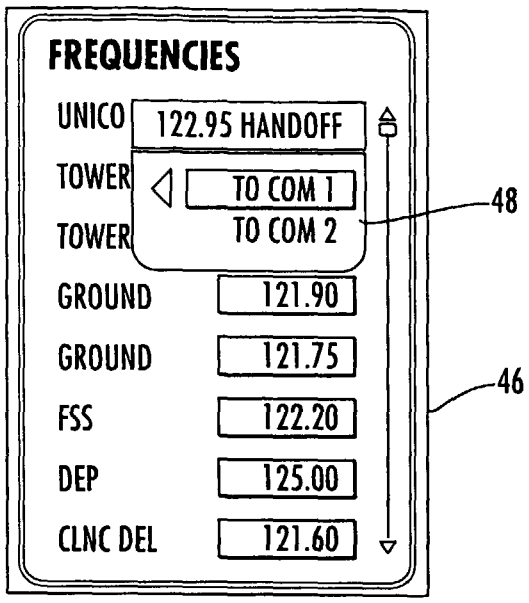

FIG. 8

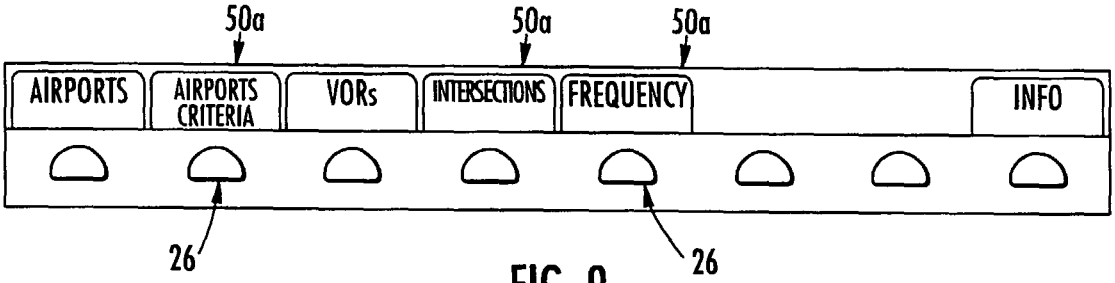

FIG. 9

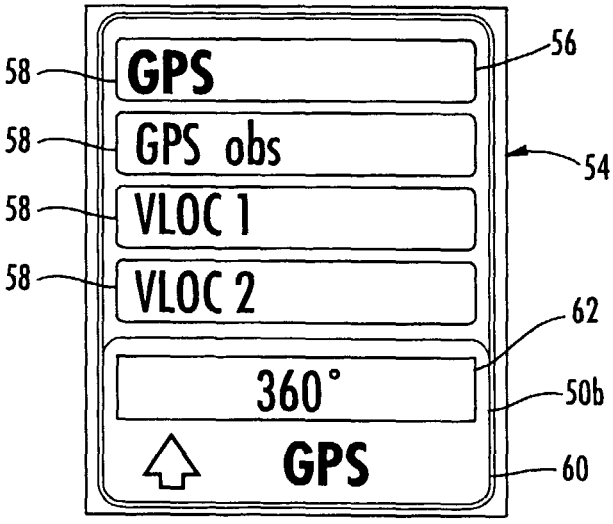

FIG. 10

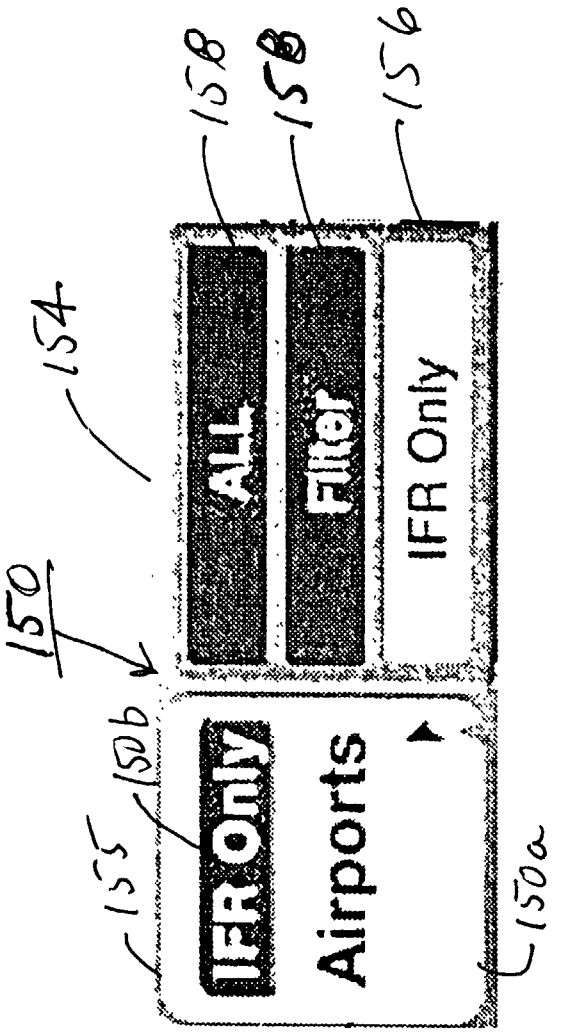

Fig 11b

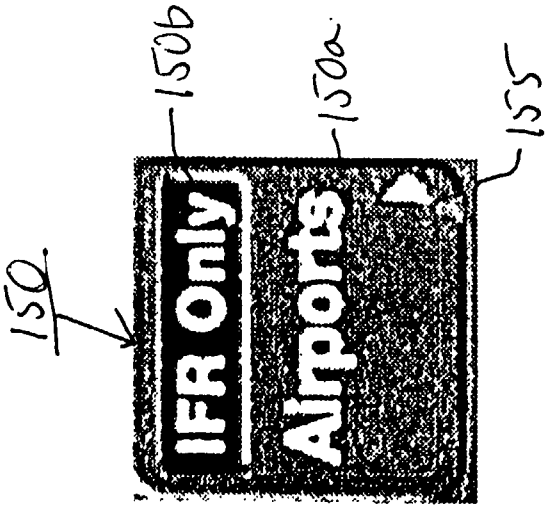

Fig 11a